# トランジスタ規格表

## *JAPANESE TRANSISTOR*
# SPECIFICATION MANUAL

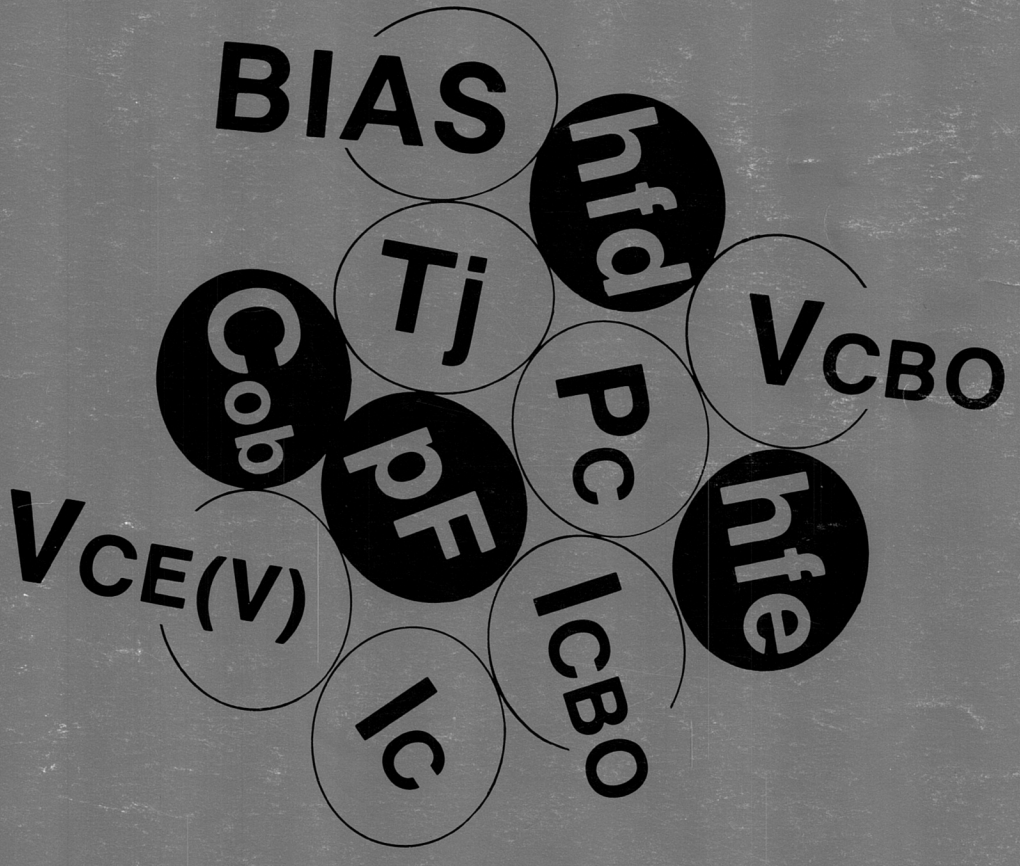


*FUJI-SVEA PUBLICATIONS*

# JAPANESE TRANSISTOR SPECIFICATION MANUAL

FUJI-SVEA PUBLICATIONS
© 1979 FUJI-SVEA INCORPORATED

PRINTED IN USA

# INTRODUCTION TO JAPANESE SEMICONDUCTORS

Fuji-Svea is happy to present the first edition of its Japanese Transistor Specification Manual. Up until now, despite the flood of Japanese electronic products on the market, little if any spec information on Japanese transistors has been readily available. With this book we hope to fill that gap by offering specs on over 3000 transistors in the 2SA, 2SB, 2SC and 2SD series.

The first part of the Manual lists items numericallly by their series (A, B, C and D), then gives information on application, materials and structure, maximum ratings (collector-base voltage, emitter-base voltage, collector current, power dissipation & temperature range), ICBO measuring criteria, DC/pulse & hFE measuring criteria, bias, Hfe, RF characteristics in fT, Cob & hie, and finally case style.

The second part of the Manual contains diagrams identifying the physical size, shape, arrangement of leads, and indication of emitter, base and collector.

The essential electrical and physical data found in this Manual will be an invaluable source for the technician in identifying, substituting and cross-referencing transistors. Used in conjuction with Fuji-Svea's Japanese Transistor Substitution Manual, one can most accurately select the best subs for those discontinued and hard to find Japanese transistors.

As always, Fuji-Svea wishes to offer you still better service to help satisfy your quality and performance requirements. We will concentrate even more strenuous efforts to provide the most up-to-date technical information available, and we look forward to our clients support and patronage of Japanese semiconductors.

Please feel free to send any inquiries you may have to the address below:

Fuji-Svea Incorporated
P.O. Box 40325
Cincinnati, Ohio 45240

**Pin Configurations are 1. Emitter, 2. Base, 3. Collector, 4. Shield, unless otherwise specified. (Outline Dimensions: mm)**

| TYPE NO. | USES | MATERIAL STRUCTURE | $V_{CBO}$ (V) | $V_{EBO}$ (V) | $I_C$ (mA) | $P_d$ (mW) | $T_j$ (°C) | $I_{CBO}$ (uA) | VALUE OF DC/PULSE $V_{CB}$(V) | $h_{FE}$ | $V_{CE}$(V) | $I_C$(mA) | BIAS $V_{CB}$(V) | $I_e$(mA) | $h_{fe}$ $h_{fb}$* | $f_{ab}$ $f_T$ (Mc) | $C_{ob}$ (pF) | $r_{bb'}$ $h_{ie(real)}$* (Ω) | CASE STYLE |
|---|---|---|---|---|---|---|---|---|---|---|---|---|---|---|---|---|---|---|---|
| 2SA 12 | IF | Ge.A | −16 | −0.5 | −15 | 80 | 85 | −6 | −12 | | | | −6 | 1 | 60 | 8 | 10 | 70 | F-12A |
| 2SA 13 | " | " | −12 | −0.5 | −15 | 80 | 85 | −10 | −12 | | | | −6 | 1 | 55 | 8 | 10 | 70 | F-12A |
| 2SA 14 | " | " | −16 | −0.5 | −15 | 80 | 85 | −6 | −12 | | | | −6 | 1 | 50 | 4 | 10 | 90 | F-12A |
| 2SA 15 | Conv | " | −16 | −0.5 | −15 | 80 | 85 | −6 | −12 | | | | −6 | 1 | 60 | 12 | 10 | 70 | F-12A |
| 2SA 16 | " | " | −12 | −0.5 | −15 | 80 | 85 | −10 | −12 | | | | −6 | 1 | 60 | 12 | 10 | 70 | F-12A |
| 2SA 17 | Mix | " | −12 | −0.5 | −15 | 50 | 85 | −6 | −12 | | | | −6 | 1 | | 19 | 9.5 | 110 | F-12A |
| 2SA 18 | RF | " | −21 | −0.5 | −15 | 80 | 85 | −7 | −23 | | | | −6 | 1 | | 19 | 9.5 | 110 | F-12A |
| 2SA 19 | IF | Ge.GD | −12 | −0.5 | −2 | 15 | 55 | −10 | −9 | | | | −6 | 1 | 20 | 50 | 1.5 | | F-19A |
| 2SA 20 | " | " | −12 | −0.5 | −2 | 15 | 55 | −10 | −9 | | | | −6 | 1 | 30 | 55 | 1.5 | | F-19A |
| 2SA 21 | " | " | −12 | −0.5 | −2 | 15 | 55 | −10 | −9 | | | | −6 | 1 | 50 | 55 | 1.5 | | F-19A |
| 2SA 22 | RF.IF | Ge.A | −20 | | −20 | 100 | 70 | −5 | −20 | | | | −6 | 1 | -0.98* | 12 | 12 | 120 | F-76 |
| 2SA 23 | " | " | −20 | | −15 | 100 | 70 | −5 | −20 | | | | −6 | 1 | -0.98* | 8 | 12 | 120 | F-76 |
| 2SA 24 | RF | Ge.D | −30 | | −10 | 60 | 70 | −5 | −6 | | | | −6 | 1 | -0.975* | 100 | 3.5 | 150 | F-61 |
| 2SA 25 | " | " | −25 | | −15 | 50 | 70 | −5 | −6 | | | | −6 | 1 | -0.975* | 100 | 3.5 | 100 | F-61 |
| 2SA 26 | RF.IF.Conv Mix.Osc | Ge.A | −20 | −15 | −50 | 200 | 85 | −12 | −16 | | | | −6 | 1 | 60 | 6 | 15 | 100 | F-84A |
| 2SA 27 | Conv | Ge.D | −18 | −0.5 | −5 | 55 | 75 | −12 | −18 | | | | −6 | 1 | | 50 | 2 | 40 | F-13A |
| 2SA 28 | RF | " | −18 | 0.5 | −5 | 55 | 75 | −8 | −12 | | | | −6 | 1 | 75 | | 2 | 40 | F-13A |
| 2SA 29 | IF | " | −18 | −0.5 | −5 | 55 | 75 | −12 | −18 | | | | −6 | 1 | | 35 | 2 | 35 | F-13A |
| 2SA 30 | Conv | Ge.A | −12 | −0.5 | −10 | 80 | 85 | −10 | −12 | | | | −6 | 1 | 75 | 10 | 10 | 85 | F-12A |
| 2SA 31 | IF | " | −12 | −0.5 | −10 | 80 | 85 | −10 | −12 | | | | −6 | 1 | 50 | 5 | 10 | <75 | F-12A |
| 2SA 32 | RF.IF | " | −20 | −10 | −50 | 100 | 70 | −5 | −20 | | | | −6 | 1 | -0.985* | 10 | 12 | 150 | F-78 |
| 2SA 33 | " | " | −20 | −10 | −25 | 100 | 70 | −5 | −20 | | | | −6 | 1 | -0.985* | 6 | 12 | 150 | F-78 |
| 2SA 35 | Conv | " | −16 | −0.5 | −15 | 80 | 85 | −6 | −12 | | | | −6 | 1 | 75 | 10 | 10 | 85 | F-12A |
| 2SA 36 | IF | Ge.A | −16 | −0.5 | −15 | 80 | 85 | −6 | −12 | | | | −6 | 1 | 50 | 5 | 10 | 75 | F-12A |
| 2SA 37 | Conv | " | −18 | −12 | −5 | 25 | 75 | −10 | −18 | | | | −6 | 1 | -0.985* | 7 | 10.5 | 80 | F-5 |
| 2SA 38 | IF | " | −18 | −12 | −5 | 25 | 75 | −10 | −18 | | | | −6 | 1 | -0.985* | 10 | 10.5 | 80 | F-5 |
| 2SA 39 | " | " | −18 | −12 | −5 | 25 | 75 | −10 | −18 | | | | −6 | 1 | -0.98* | 5.5 | 10.5 | 80 | F-5 |
| 2SA 40 | SW | " | −25 | −12 | −50 | 80 | 85 | −6 | −12 | | | | −6 | 1 | 65 | 5 | 10 | 75 | F-12A |
| 2SA 41 | RF | " | −35 | −20 | 40 | 250 | 70 | −6 | −12 | | | | −6 | 1 | 45 | 6 | 10 | 95 | F-64 |
| 2SA 42 | " | " | −45 | −20 | −40 | 250 | 70 | −6 | −12 | | | | −6 | 1 | 45 | 6 | 10 | 95 | F-64 |
| 2SA 43 | RF | Ge.D | −35 | −0.5 | −10 | 80 | 85 | −10 | −12 | | | | −9 | 1 | 60 | 40 | 2.3 | 40 | F-13A |
| 2SA 44 | RF.IF.Conv Mix.Osc | Ge.A | −15 | −10 | −10 | 80 | 75 | −10 | −10 | | | | −6 | 1 | 100 | 15 | 10.5 | 110 | F-20 |
| 2SA 45 | IF | " | −18 | −12 | −5 | 60 | 75 | −12 | −18 | | | | −6 | 1 | | | 11 | 80 | F-12A |
| 2SA 46 | RF.IF | " | −12 | −0.5 | −25 | 100 | 70 | −10 | −12 | | | | −6 | 1 | -0.985* | 10 | 12 | 150 | F-78 |
| 2SA 47 | " | " | −12 | −0.5 | −25 | 100 | 70 | −10 | −12 | | | | −6 | 1 | -0.985* | 6 | 12 | 150 | F-78 |
| 2SA 48 | RF | " | −18 | −12 | −5 | 60 | 75 | −12 | −18 | | | | −6 | 1 | | | 11 | 80 | F-12A |
| 2SA 49 | IF | " | −18 | −12 | −5 | 60 | 75 | −10 | −18 | | | | −6 | 1 | 30-200 | | 10.5 | 90 | F-12A |
| 2SA 50 | SW | " | −18 | −12 | −24 | 60 | 75 | −3 | −12 | 100 | −1 | −24 | −6 | 1 | | 14 | 10 | <150 | F-12A |
| 2SA 51 | RF | " | −18 | −12 | −5 | 60 | 75 | −10 | −18 | | | | −6 | 1 | -0.985* | 14 | 10.5 | 90 | F-12A |
| 2SA 52 | Conv | " | −18 | −12 | −5 | 60 | 75 | −10 | −18 | | | | −6 | 1 | 25-180 | | 10.5 | 80 | F-12A |
| 2SA 53 | IF | " | −18 | −12 | −5 | 60 | 75 | −10 | −18 | | | | −6 | 1 | 20-140 | | 10.5 | 90 | F-12A |
| 2SA 54 | RF.IF.Conv Mix.Osc | Ge.Me | −20 | −0.2 | −5 | 75 | 85 | −5 | −12 | | | | −6 | 2 | 10 | 400* | 1.5 | 40 | F-59 |
| 2SA 55 | " | Ge.A | −15 | −10 | −10 | 80 | 75 | −10 | −10 | | | | −6 | 1 | 50 | 6 | 10.5 | 75 | F-20 |
| 2SA 56 | SW | Ge.Me | −15 | −3.5 | −50 | 150 | 100 | −5 | −5 | 40 | −0.3 | −10 | −3 | 10 | | 300* | 5 | | F-49C |
| 2SA 57 | RF | Ge.D | −18 | −0.5 | −5 | 55 | 75 | −10 | −18 | | | | −6 | 1 | 20-350 | 85 | 2 | 45 | F-13A |
| 2SA 58 | RF. Conv | " | −18 | −0.5 | −5 | 55 | 75 | −10 | −18 | | | | −6 | 1 | 20-350 | 75 | 2 | 45 | F-13A |
| 2SA 59 | Conv | " | −18 | −0.5 | −5 | 55 | 75 | −12 | −18 | | | | −6 | 1 | 70 | 65 | 2 | 40 | F-13A |
| 2SA 60 | " | " | −18 | −0.5 | −5 | 55 | 75 | −10 | −18 | | | | −6 | 1 | 40-350 | 55 | 2 | 40 | F-13 |
| 2SA61 | RF.IF.Conv Mix.Osc | Ge.AD | −20 | −0.5 | −10 | 100 | 75 | −13 | −6 | | | | −6 | 1 | 80 | 70 | 2 | 50 | F-12A |
| 2SA 64 | SW | Ge.A | −16 | −9 | −40 | 80 | 85 | −6 | −12 | | | | −6 | 1 | 65 | 15 | 10 | < 85 | F-12A |
| 2SA65 | " | " | −18 | −12 | −200 | 150 | 75 | −7 | −12 | 80 | −0.5 | −100 | −6 | 1 | | 6 | <16 | <140 | F-12A |
| 2SA 66 | " | " | −18 | −12 | −200 | 150 | 75 | −7 | −12 | 80 | −0.5 | −100 | −6 | 1 | | 10 | <16 | <140 | F-12A |
| 2SA 67 | " | " | −18 | −12 | −200 | 150 | 75 | −7 | −12 | 80 | −0.5 | −100 | −6 | 1 | | 14 | <16 | <140 | F-12A |
| 2SA 68 | RF.IF.Conv Mix.Osc | Ge.AD | −20 | −0.5 | −10 | 100 | 75 | −13 | −6 | | | | −6 | 1 | 80 | 70 | | | F-72A |
| 2SA 69 | " | " | −20 | −0.5 | −10 | 100 | 75 | −13 | −6 | | | | −6 | 1 | 80 | 70 | | | F-72A |
| 2SA 70 | " | " | −20 | −0.5 | −10 | 100 | 75 | −13 | −6 | | | | −6 | 1 | 80 | 70 | 2 | 50 | F-72A |
| 2SA 71 | " | " | −20 | −0.5 | −10 | 100 | 75 | −13 | −6 | | | | −6 | 1 | 80 | 100 | 2 | 50 | F-72A |
| 2SA 72 | RF | Ge.D | −18 | −0.5 | −5 | 55 | 75 | −12 | −18 | | | | −6 | 1 | 50 | 40 | 2 | 40 | F-13A |
| 2SA 73 | Conv | " | −18 | −0.5 | −5 | 55 | 75 | −12 | −18 | | | | −6 | 1 | 50 | 35 | 2 | 40 | F-13A |
| 2SA 74 | RF | " | −50 | −0.5 | −50 | 120 | 75 | −8 | −12 | | | | −9 | 1 | 70 | 70 | 2.2 | 30 | F-13A |

**Pin Configurations are 1. Emitter, 2. Base, 3. Collector, 4. Shield, unless otherwise specified. (Outline Dimensions: mm)**

| TYPE NO. | USES | MATERIAL STRUCTURE | $V_{CBO}$ (V) | $V_{EBO}$ (V) | $I_C$ (mA) | Pd (mW) | Tj (°C) | $I_{CBO}$ (uA) | $V_{CB}$(V) | VALUE OF DC/PULSE hFE | $V_{CE}$(V) | $I_C$(mA) | BIAS $V_{CB}$(V) | $I_e$(mA) | hfe hfb* | fab fT (Mc) | Cob (pF) | $r_{bb'}$ $h_{ie(real)}$* (Ω) | CASE STYLE |
|---|---|---|---|---|---|---|---|---|---|---|---|---|---|---|---|---|---|---|---|
| 2SA 75 | RF | Ge.D | −20 | −0.5 | −50 | 120 | 75 | −8 | −12 | | | | −9 | 1 | 70 | 30 | 2.2 | 30 | F-13A |
| 2SA 76 | " | " | −18 | −0.5 | −5 | 55 | 75 | −15 | −18 | | | | −6 | 1 | 20-350 | 130 | 1.7 | 40 | F-13A |
| 2SA 77 | Osc. | " | −18 | −0.5 | −5 | 55 | 75 | −15 | −18 | | | | −6 | 1 | 20-350 | 110 | 1.7 | 40 | F-13A |
| 2SA 78 | SW | " | −40 | −2 | −400 | 125 | 75 | −8 | −12 | 60 | −1 | −400 | −6 | 1 | | 40 | ⌜6 | ≤120 | F-13A |
| 2SA 79 | " | Ge.A | −20 | −12 | −200 | 60 | 75 | −7 | −12 | 70 | −0.5 | −100 | −6 | 1 | | >4 | <15 | ≤140 | F-12A |
| 2SA 80 | RF.Conv. | | −20 | −0.5 | −10 | 80 | 85 | −20 | −12 | | | | −9 | 1 | 80 | 60 | 1.7 | 35 | F-13A |
| 2SA 81 | Osc | " | −20 | −0.5 | −10 | 80 | 85 | −20 | −12 | | | | −9 | 1 | 80 | 40 | 1.7 | 41 | F-13A |
| 2SA 82 | Mix | " | −20 | −0.5 | −10 | 80 | 85 | −8 | −12 | | | | −9 | 1 | 6 | 40 | 1.7 | 25 | F-13A |
| 2SA 83 | IF | " | −25 | −0.5 | −10 | 80 | 85 | −8 | −12 | | | | −9 | 1 | 60 | 30 | 1.7 | 25 | F-13A |
| 2SA 84 | Conv | " | −25 | −0.5 | −10 | 80 | 85 | −8 | −12 | | | | −9 | 1 | 60 | 35 | 1.7 | 35 | F-13A |
| 2SA 85 | RF | " | −25 | −1 | −10 | 80 | 85 | −8 | −12 | | | | −9 | 1 | 60 | 55 | 1.7 | 30 | F-13A |
| 2SA 86 | " | " | −45 | −1 | −50 | 225 | 85 | −12 | −12 | | | | −9 | 1 | 80 | 35 | 1.7 | 45 | F-67 |
| 2SA 87 | " | " | −30 | −0.5 | −10 | 80 | 85 | −12 | −12 | | | | −12 | 1.5 | 100 | 100 | 1.9 | 40 | F-13A |
| 2SA 88 | Osc. | " | −30 | −0.5 | −10 | 80 | 85 | −12 | −12 | | | | −12 | 1.5 | 60 | 100 | 1.9 | 60 | F-13A |
| 2SA 89 | Mix | " | −30 | −0.5 | −10 | 80 | 85 | −12 | −12 | | | | −12 | 1.5 | 80 | 90 | 2.3 | 60 | F-13A |
| 2SA 90 | RF | " | −30 | −0.5 | −20 | 200 | 85 | −12 | −12 | | | | −12 | 1.5 | 20 | >60 | <3 | 60 | F-67 |
| 2SA 92 | Osc | " | −18 | -0.5 | −5 | 55 | 75 | −10 | −18 | | | | −6 | 1 | 40-350 | 50 | 1.9 | 40 | F-13A |
| 2SA 93 | Mix | " | −18 | −0.5 | −5 | 55 | 75 | −10 | −18 | | | | −6 | 1 | 20-350 | 45 | 1.9 | 30 | F-13A |
| 2SA 94 | Conv | " | −9 | −0.5 | −10 | 80 | 85 | −15 | −9 | | | | −3 | 1 | | 45 | 5 | 65 | F-13A |
| 2SA 95 | RF | " | −20 | −0.5 | −10 | 80 | 85 | −10 | −12 | | | | −9 | 1 | | 50 | 2.3 | 50 | F-72B |
| 2SA 96 | " | " | −20 | −0.5 | −10 | 80 | 85 | −10 | −12 | | | | −9 | 1 | | 45 | 2.3 | 50 | F-72B |
| 2SA 97 | " | " | −20 | −0.5 | −10 | 80 | 85 | −10 | −12 | | | | −9 | 1 | | 40 | 2.3 | 50 | F-72B |
| 2SA 98 | Osc | " | −20 | −0.5 | −10 | 80 | 85 | −10 | −12 | | | | −9 | 1 | | 30 | 2.3 | 50 | F-72B |
| 2SA 99 | Mix | " | −20 | −0.5 | −10 | 80 | 85 | −10 | −12 | | | | −9 | 1 | | 20 | 2.3 | 50 | F-72B |
| 2SA 100 | RF.IF.Conv Mix.Osc | " | −40 | −0.7 | −10 | 60 | 75 | −16 | −10 | | | | −6 | 1 | 80 | 20 | 1.7 | 100 | F-12A |
| 2SA 101 | " | " | −40 | −0.7 | −10 | 60 | 75 | −16 | −10 | | | | −6 | 1 | 12 | 15 | 1.7 | 30 | F-12A |
| 2SA 102 | " | " | −40 | −0.7 | −10 | 60 | 75 | −16 | −10 | | | | −6 | 1 | 40 | 25 | 1.7 | 40 | F-12A |
| 2SA 103 | " | " | −40 | −0.7 | −10 | 60 | 75 | −16 | −10 | | | | −6 | 1 | 50 | 35 | 1.7 | 50 | F-12A |
| 2SA 104 | " | " | −40 | −0.7 | −10 | 60 | 75 | −16 | −10 | | | | −6 | 1 | 100 | 50 | 1.7 | 50 | F-12A |
| 2SA 105 | Conv | " | −6 | −0.5 | −10 | 80 | 85 | −10 | −6 | | | | −3 | 1 | 50 | 75 | 3 | 50 | F-13A |
| 2SA 106 | Conv.Mix | Ge.D | −6 | −0.5 | −10 | 80 | 85 | −10 | −6 | | | | −3 | 1 | 50 | 30 | 3 | 50 | F-13A |
| 2SA 107 | Conv.Mix Osc | " | −6 | −0.5 | −10 | 80 | 85 | −10 | −6 | | | | −3 | 1 | 40 | 20 | 3 | 50 | F-13A |
| 2SA 108 | RF | " | −20 | −0.5 | −10 | 80 | 85 | −10 | −12 | | | | −9 | 1 | 70 | 50 | 2.3 | 50 | F-13A |
| 2SA 109 | " | " | −20 | −0.5 | −10 | 80 | 85 | −10 | −12 | | | | −9 | 1 | 60 | 45 | 2.3 | 50 | F-13A |
| 2SA 110 | Conv | " | −20 | −0.5 | −10 | 80 | 85 | −10 | −12 | | | | −9 | 1 | 60 | 40 | 2.3 | 50 | F-13A |
| 2SA 111 | Osc | " | −20 | −0.5 | −10 | 80 | 85 | −10 | −12 | | | | −9 | 1 | 40 | 30 | 2.3 | 50 | F-13A |
| 2SA 112 | Mix | " | −20 | −0.5 | −10 | 80 | 85 | −10 | −12 | | | | −9 | 1 | 45 | 20 | 2.3 | 50 | F-13A |
| 2SA 113 | Conv.Mix | " | −34 | −1 | −10 | 80 | 85 | −7 | −12 | | | | −12 | 1 | 45 | 20 | 2 | 50 | F-13A |
| 2SA 114 | IF | " | −34 | −1 | −10 | 80 | 85 | −7 | −12 | | | | −12 | 1 | 40 | 20 | 2 | 50 | F-13A |
| 2SA 115 | RF | " | −34 | −1 | −10 | 80 | 85 | −5 | −12 | | | | −12 | 1 | 60 | 30 | 2 | 50 | F-13A |
| 2SA 116 | " | " | −30 | −0.5 | −10 | 80 | 85 | −10 | −12 | | | | −12 | 1.5 | 60 | 120 | 2 | 50 | F-13A |
| 2SA 117 | Osc | " | −30 | −0.5 | −10 | 80 | 85 | −10 | −12 | | | | −12 | 1.5 | 40 | 110 | 2 | 50 | F-13A |
| 2SA 118 | Mix | " | −30 | −0.5 | −10 | 80 | 85 | −10 | −12 | | | | −12 | 1.5 | 60 | 100 | 2 | 50 | F-13A |
| 2SA 121 | RF.Conv. Mix.Osc | Ge.GD | −15 | | −2 | 15 | 65 | −8 | −15 | | | | −6 | 1 | -0.96* | 100 | 1.3 | | F-18 |
| 2SA 122 | " | " | −15 | | −2 | 15 | 65 | −8 | −15 | | | | −6 | 1 | -0.96* | 100 | 1.3 | | F-18 |
| 2SA 123 | " | " | −15 | | −2 | 15 | 65 | −8 | −15 | | | | −6 | 1 | -.96* | 100 | 1.3 | | F-18 |
| 2SA 124 | " | " | −15 | | −2 | 15 | 65 | −8 | −15 | | | | −6 | 1 | -0.97* | 120 | 1.3 | | F-18 |
| 2SA 125 | " | " | −15 | | −2 | 15 | 65 | −2 | −15 | | | | −6 | 1 | -0.98* | 120 | 1.3 | | F-18 |
| 2SA 126 | SW | Ge.Me | −12 | −1 | −50 | 150 | 100 | −5 | −5 | 40 | −0.5 | −10 | −3 | 10 | | 300* | | 5 | F-49C |
| 2SA 127 | RF | Ge.D | −70 | −0.5 | −50 | 150 | 75 | −50 | −12 | | | | −6 | 1 | 0.98* | 25 | 15 | 40 | F-13A |
| 2SA 128 | SW | " | −40 | −2 | −600 | 170 | 75 | −50 | −12 | 35 | −1.5 | −600 | −6 | 1 | | >15 | ≤25 | <70 | F-13A |
| 2SA 129 | " | " | −40 | −2 | −600 | 170 | 75 | −50 | −12 | 70 | −1.5 | −600 | −6 | 1 | | >15 | ≤25 | <70 | F-13A |
| 2SA 130 | RF.Conv | Ge.Me | −9 | −0.5 | −10 | 80 | 85 | −15 | −9 | | | | −3 | 1 | 80 | 65 | 4 | 55 | F-13A |
| 2SA 131 | Osc | " | −9 | −0.5 | −10 | 80 | 85 | −15 | −9 | | | | −3 | 1 | 50 | 45 | 4 | 60 | F-13A |
| 2SA 132 | Mix | " | −9 | −0.5 | −10 | 80 | 85 | −15 | −9 | | | | −3 | 1 | 80 | 50 | 4 | 70 | F-13A |
| 2SA 133 | IF | " | −9 | −0.5 | −10 | 80 | 85 | −15 | −9 | | | | −3 | 1 | 60 | 40 | 4 | 110 | F-13A |
| 2SA 134 | " | " | −20 | −0.5 | −10 | 80 | 85 | −30 | −20 | | | | −6 | 1 | | 140 | 3 | 100 | F-72A |
| 2SA 135 | RF.Conv | " | −20 | −0.5 | −10 | 80 | 85 | −30 | −20 | | | | −6 | 1 | | 150 | 3 | 80 | F-72A |
| 2SA 136 | Conv | Ge.A | −6 | −0.5 | −10 | 80 | 85 | −10 | −6 | | | | −3 | 1 | 75 | 10 | 13 | 85 | F-12A |
| 2SA 137 | IF | " | −6 | −0.5 | −10 | 80 | 85 | −10 | −6 | | | | −3 | 1 | 50 | 5 | 13 | 75 | F-12A |

**Pin Configurations are 1. Emitter, 2. Base, 3. Collector, 4. Shield, unless otherwise specified. (Outline Dimensions: mm)**

| TYPE NO. | USES | MATERIAL STRUCTURE | $V_{CBO}$ (V) | $V_{EBO}$ (V) | $I_C$ (mA) | Pd (mW) | Tj (°C) | $I_{CBO}$ (uA) | VALUE OF DC/PULSE $V_{CB}$(V) | hFE | $V_{CE}$(V) | $I_C$(mA) | BIAS $V_{CB}$(V) | $I_e$(mA) | hfe hfb* | fab fT (Mc) | Cob (pF) | $r_{bb'}$ $h_{ie(real)}$* (Ω) | CASE STYLE |
|---|---|---|---|---|---|---|---|---|---|---|---|---|---|---|---|---|---|---|---|
| 2SA 138 | SW | Ge.A | −20 | −10 | −25 | 80 | 85 | −5 | −20 | 70 | −1 | −10 | −6 | 1 | | 15 | 10 | 150 | F-12A |
| 2SA 139 | RF.IF | " | −20 | −10 | −50 | 80 | 85 | −5 | −20 | 70 | −1 | −50 | −6 | 1 | 0.985* | 8 | 12 | 150 | F-12A |
| 2SA 141 | IF | " | −15 | −1.5 | −15 | 80 | 85 | −5 | −12 | | | | −6 | 1 | 70* | 4 | 12 | 60 | F-12A |
| 2SA 142 | Conv | " | −15 | −1.5 | −15 | 80 | 85 | −5 | −12 | | | | −6 | 1 | 70 | 8 | 12 | 60 | F-12A |
| 2SA 143 | RF.Conv | " | −15 | −1.5 | −15 | 80 | 85 | −5 | −12 | | | | −6 | 1 | 70* | 15 | 12 | 60 | F-12A |
| 2SA 144 | RF.IF.Conv Mix.Osc | " | −15 | −10 | −10 | 80 | 75 | −10 | −10 | | | | −6 | 1 | 100 | 15 | 10.5 | 110 | F-12B |
| 2SA 145 | " | " | −15 | −10 | −10 | 80 | 75 | −10 | −10 | | | | −6 | 1 | 50 | 6 | 10. | 75 | F-12B |
| 2SA 146 | IF | Ge.D | −20 | −0.5 | −10 | 60 | 85 | −15 | −12 | | | | −6 | 1 | 50 | 20 | 2.5 | 40 | F-13B |
| 2SA 147 | Conv.Mix | " | −20 | −0.5 | −10 | 60 | 85 | −15 | −12 | | | | −6 | 1 | 70 | 30 | 2.5 | 40 | F-13B |
| 2SA 148 | Conv | " | −20 | −0.5 | -10 | 60 | 85 | −15 | −12 | | | | −6 | 1 | 70 | 40 | 2.5 | 45 | F-13B |
| 2SA 149 | RF | " | −20 | −0.5 | −10 | 60 | 85 | −15 | −12 | | | | −6 | 1 | 70 | 50 | 2.5 | 50 | F-13B |
| 2SA 151 | IF | Ge.A | −9 | −0.5 | −15 | 80 | 85 | −5 | −6 | | | | −3 | 1 | | 6 | 13.5 | 90 | F-12A |
| 2SA 152 | Conv | " | −9 | −0.5 | −15 | 80 | 85 | −5 | −6 | | | | −3 | 1 | | 10 | 13.5 | 110 | F-12A |
| 2SA 153 | Mix | Ge.GC | −15 | −0.5 | −4 | 20 | 65 | −5 | −9 | | | | −6 | 1 | 60 | 60 | 1.3 | | F-19A |
| 2SA 154 | IF | " | −15 | −0.5 | −4 | 20 | 65 | −5 | −9 | | | | −6 | 1 | 20 | 50 | 1.5 | | F-19A |
| 2SA 155 | " | " | −15 | −0.5 | −4 | 20 | 65 | −5 | −9 | | | | −6 | 1 | 30 | 55 | 1.5 | | F-19A |
| 2SA 156 | " | " | −15 | −0.5 | −4 | 20 | 65 | −5 | −9 | | | | −6 | 1 | 50 | 55 | 1.5 | | F-19A |
| 2SA 157 | Osc | " | −15 | −0.5 | −4 | 20 | 65 | −5 | −9 | | | | −6 | 1 | 50 | 65 | 1.5 | | F-19A |
| 2SA 159 | Conv | Ge.GD | −15 | −0.5 | −4 | 20 | 65 | −5 | −9 | | | | −6 | 1 | 50 | 55 | 1.5 | | F-19A |
| 2SA 160 | " | " | −15 | −0.5 | −4 | 20 | 65 | −5 | −9 | | | | −6 | 1 | 60 | 55 | 1.5 | | F-19A |
| 2SA 161 | RF | Ge.Me | −20 | | −15 | 50 | 85 | −5 | −15 | | | | −6 | 2 | 0.93* | 400* | 1.2 | 80 | F-51 |
| 2SA 162 | " | " | −20 | | −15 | 50 | 85 | −5 | −15 | | | | −6 | 2 | -0.96* | 400* | 1.2 | 80 | F-51 |
| 2SA 163 | " | " | −20 | | −15 | 50 | 85 | −5 | −15 | | | | −6 | 2 | 0.985* | 400* | 1.2 | 80 | F-51 |
| 2SA 164 | Osc | " | −20 | | −15 | 50 | 85 | −5 | −15 | | | | −6 | 2 | 0.93* | 400* | 1.2 | 80 | F-51 |
| 2SA 165 | " | " | −20 | | −15 | 50 | 85 | −5 | −15 | 24 | −3 | −1 | −6 | 2 | -0.96* | 450* | 1.7 | 80 | F-51 |
| 2SA 166 | " | " | −20 | | −15 | 50 | 85 | −5 | −15 | | | | −6 | 2 | -0.985* | 400* | 1.2 | 80 | F-51 |
| 2SA 167 | RF | Ge.A | −20 | −10 | −50 | 125 | 75 | −8 | −20 | | | | −6 | 1 | 70 | 9 | 15 | 120 | F-84A |
| 2SA 168 | " | " | −20 | −10 | −50 | 175 | 75 | −8 | −20 | | | | −6 | 1 | 70 | 9 | 15 | 120 | F-91 |
| 2SA 168A | " | " | −20 | −10 | −50 | 175 | 75 | −8 | −20 | | | | −6 | 1 | 70 | 9 | 15 | 120 | F-91 |
| 2SA 169 | SW | " | −20 | −10 | −50 | 125 | 75 | −8 | −20 | 70 | −1 | −10 | −6 | 1 | | 15 | 11 | 250 | F-84A |
| 2SA 170 | SW | Ge.A | −20 | −10 | −50 | 175 | 75 | −8 | −20 | 70 | −1 | −10 | −6 | 1 | | 15 | 11 | 250 | F-91 |
| 2SA 171 | " | " | −20 | −10 | −50 | 125 | 75 | −8 | −20 | 60 | −1 | −10 | −6 | 1 | | 8 | 11 | 230 | F-84A |
| 2SA 172 | " | " | −20 | −10 | −200 | 175 | 75 | −8 | −20 | 40 | −0.35 | −200 | −6 | 1 | | 8 | 11 | 230 | F-91 |
| 2SA 173 | " | " | −20 | −10 | −50 | 125 | 75 | −8 | −20 | 60 | −1 | −10 | −6 | 1 | | 4 | 13 | 200 | F-84A |
| 2SA 174 | " | " | −20 | −10 | −50 | 175 | 75 | −8 | −20 | 60 | −1 | −10 | −6 | 1 | | 4 | 13 | 200 | F-91 |
| 2SA 175 | RF | Ge.D | −18 | −0.5 | −5 | 55 | 75 | −15 | −18 | | | | −6 | 1 | 20-350 | 85 | 2 | 40 | F-13A |
| 2SA 176 | " | " | −18 | −0.5 | −5 | 55 | 75 | −12 | −18 | | | | −6 | 1 | | 85 | 2.5 | 45 | F-13A |
| 2SA 178 | " | " | −18 | −0.5 | −5 | 55 | 75 | −12 | −18 | | | | −6 | 1 | | | 2 | 40 | F-13A |
| 2SA 180 | Conv | Ge.A | −15 | −15 | −10 | 50 | 75 | −10 | −15 | | | | −6 | 1 | -0.986* | 10 | 12 | 100 | F-12A |
| 2SA 181 | IF | " | −15 | −15 | −10 | 50 | 75 | −10 | −15 | | | | −6 | 1 | -0.979* | 5 | 12 | 80 | F-12A |
| 2SA 182 | " | " | −15 | −15 | −10 | 50 | 75 | −10 | −15 | | | | −6 | 1 | -0.964* | 5 | 12 | 80 | F-12A |
| 2SA 183 | " | " | −15 | −15 | −10 | 50 | 75 | −10 | −6 | | | | −6 | 1 | -0.988* | 16 | 12 | 120 | F-12A |
| 2SA 184 | " | " | −15 | −15 | −10 | 50 | 75 | −10 | −6 | | | | −6 | 1 | −0.95* | 3 | 12 | 70 | F-12A |
| 2SA 188 | RF.IF.Conv. Mix.Osc | " | −12 | −0.5 | −15 | 80 | 85 | −10 | −12 | | | | −6 | 1 | 70 | 10 | 10 | 150 | F-12A |
| 2SA 189 | IF | " | −12 | −0.5 | −15 | 80 | 85 | −10 | −12 | | | | −6 | 1 | 70 | 6 | 10 | 100 | F-12A |
| 2SA 190 | Mix | Ge.D | −20 | −0.5 | −15 | 80 | 80 | −20 | −20 | | | | −6 | 1 | 60 | 40 | 2.6 | 60 | F-13A |
| 2SA 191 | " | " | −20 | −0.5 | −15 | 80 | 80 | −20 | −20 | | | | −6 | 1 | 25 | 20 | 2.6 | 50 | F-13A |
| 2SA 192 | Conv | " | −20 | −0.5 | −15 | 80 | 80 | −20 | −20 | | | | −6 | 1 | | 13 | 3.2 | 40 | F-13A |
| 2SA 193 | " | Ge.A | −15 | −12 | −15 | 80 | 80 | −12 | −15 | | | | −6 | 1 | 50 | 13 | 10 | 100 | F-12A |
| 2SA 194 | IF | " | −15 | −12 | −15 | 80 | 80 | −12 | −15 | | | | −6 | 1 | 40 | 7 | 10 | 90 | F-12A |
| 2SA 195 | " | " | −15 | −12 | −15 | 80 | 80 | −12 | −15 | | | | −6 | 1 | 30 | 4 | 10 | 75 | F-12A |
| 2SA 196 | " | " | −15 | −12 | −15 | 80 | 80 | −12 | −15 | | | | −6 | 1 | 25 | 2.5 | 10 | 60 | F-12A |
| 2SA 197 | " | " | −15 | −15 | −10 | 50 | 75 | −10 | −15 | | | | −6 | 1 | | | 12 | 55 | F-12A |
| 2SA 198 | " | " | −15 | −5 | −5 | 30 | 75 | −25 | −15 | | | | −6 | 1 | | | 12 | 55 | F-12A |
| 2SA 199 | RF | " | −15 | −5 | −5 | 30 | 75 | −10 | −15 | | | | −6 | 1 | | | 11 | 95 | F-12A |
| 2SA 200 | " | ' | −15 | −5 | −5 | 30 | 75 | −10 | −15 | | | | −6 | 1 | | | 11 | 95 | F-6 |
| 2SA 201 | IF.Conv | " | −15 | −5 | −15 | 100 | 75 | −10 | −15 | | | | −6 | 1 | 50 | 8 | 11 | 65 | F-12A |
| 2SA 202 | " | " | −15 | −5 | −15 | 100 | 75 | −10 | −15 | | | | −6 | 1 | 55 | 12 | 11 | 70 | F-12A |
| 2SA 203 | If | " | −15 | −5 | −15 | 100 | 75 | −10 | −15 | | | | −6 | 1 | 30 | 5 | 11 | 55 | F-12A |
| 2SA 204 | RF | " | −30 | −20 | −200 | 150 | 85 | −6 | −10 | 60 | −1 | −10 | −6 | 1 | 65 | 6 | 15 | 130 | 84A |

**Pin Configurations are 1. Emitter, 2. Base, 3. Collector, 4. Shield, unless otherwise specified. (Outline Dimensions: mm)**

| TYPE NO. | USES | MATERIAL STRUCTURE | $V_{CBO}$ (V) | $V_{EBO}$ (V) | $I_C$ (mA) | Pd (mW) | Tj (°C) | $I_{CBO}$ (uA) | VALUE OF DC/PULSE $V_{CB}$(V) | $h_{FE}$ | $V_{CE}$(V) | $I_C$(mA) | BIAS $V_{CB}$(V) | $I_e$(mA) | hfe hfb* | fab fT (Mc) | Cob (pF) | $r_{bb'}$ $h_{ie(real)}$* (Ω) | CASE STYLE |
|---|---|---|---|---|---|---|---|---|---|---|---|---|---|---|---|---|---|---|---|
| 2SA 205 | RF.SW | Ge.A | −30 | −20 | −200 | 200 | 85 | −6 | −15 | 40 | −1 | −10 | −6 | 1 | 45 | 5 | 15 | 110 | F-84A |
| 2SA 206 | " | " | −30 | −20 | −200 | 200 | 85 | −6 | −20 | 55 | −1 | −10 | −6 | 1 | 60 | 7 | 15 | 120 | F-84A |
| 2SA 207 | " | " | −30 | −20 | −200 | 200 | 85 | −6 | −15 | 65 | −1 | −10 | −6 | 1 | 70 | 12 | 15 | 130 | F-84A |
| 2SA 208 | SW | " | −20 | −12 | −400 | 120 | 85 | −5 | −12 | 15 | −0.3 | −200 | −6 | 1 | | > 3 | <25 | <120 | F-84A |
| 2SA 209 | SW | " | −20 | −12 | −400 | 120 | 85 | −5 | −12 | 30 | −0.3 | −200 | −6 | 1 | | > 5 | <25 | <150 | F-84A |
| 2SA 210 | " | " | −20 | −12 | −400 | 120 | 85 | −5 | −12 | 45 | −0.3 | −200 | −6 | 1 | | >10 | <25 | <200 | F-84A |
| 2SA 211 | " | " | −18 | −10 | −100 | 120 | 85 | −10 | −12 | 30 | −0.3 | −100 | −6 | 1 | | > 4 | <20 | <150 | F-84A |
| 2SA 212 | " | " | −25 | −12 | −100 | 120 | 85 | −5 | −12 | 30 | −0.3 | −100 | −6 | 1 | | > 4 | <20 | 150 | F-84A |
| 2SA 213 | RF.Mix | Ge.GD | −15 | −0.5 | −1 | 15 | 65 | −5 | −9 | | | | −6 | 1 | 25 | 140 | 1 | | F-19A |
| 2SA 214 | Conv. Osc | " | −15 | −0.5 | −2 | 15 | 65 | −5 | −9 | | | | −6 | 1 | 25 | 140 | 1 | | F-19A |
| 2SA 215 | RF | " | −15 | −0.5 | −2 | 15 | 65 | −5 | −9 | | | | −6 | 1 | 40 | 120 | 1 | | F-19A |
| 2SA 216 | " | " | −15 | −0.5 | −2 | 15 | 65 | −5 | −9 | | | | −6 | 1 | 40 | 120 | 1 | | F-19A |
| 2SA 218 | RF.IF | Ge.D | −20 | −0.5 | −10 | 50 | 75 | −12 | −15 | | | | −6 | 1 | 90 | 55 | 3 | 65 | F-13A |
| 2SA 219 | RF | " | −20 | −1.5 | −15 | 70 | 75 | −15 | −15 | | | | −6 | 1 | 70 | 55 | 3.5 | 35 | F-12A |
| 2SA 220 | RF.Conv | " | −20 | −0.5 | −15 | 50 | 75 | −15 | −15 | | | | −6 | 1 | 150 | 60 | 3.5 | 35 | F-12A |
| 2SA 221 | " | " | −20 | −1.5 | −15 | 70 | 75 | −15 | −15 | | | | −6 | 1 | 80 | 55 | 3.5 | 35 | F-12A |
| 2SA 222 | " | " | −20 | −1.5 | −15 | 70 | 75 | −15 | −15 | | | | −6 | 1 | 90 | 60 | 3.5 | 35 | F-12A |
| 2SA 223 | Osc | " | −20 | −1.5 | −15 | 70 | 75 | −15 | −15 | | | | −6 | 1 | 120 | 65 | 3.5 | 30 | F-12A |
| 2SA 224 | RF | " | −20 | −0.5 | −10 | 50 | 75 | −12 | −15 | | | | −6 | 1 | 170 | 90 | 2.5 | 65 | F-13A |
| 2SA 225 | " | " | −20 | −1.5 | −15 | 70 | 75 | −15 | −15 | | | | −6 | 1 | 80 | 55 | 3.5 | 35 | F-12A |
| 2SA 226 | RF.Mix | " | −15 | −0.5 | −10 | 50 | 75 | −12 | −15 | | | | −6 | 1 | 70 | 95 | 3 | 70 | F-13A |
| SA 227 | RF | " | −20 | −0.5 | −10 | 50 | 75 | −12 | −15 | | | | −6 | 1 | | 90 | 2 | 250 | F-13A |
| 2SA 228 | " | " | −80 | −0.5 | −50 | 170 | 75 | −50 | −40 | | | | −6 | 1 | 50 | 35 | 3 | 40 | F-13A |
| 2SA 229 | " | Ge.Me. | −20 | −0.2 | −5 | 75 | 85 | −10 | −12 | | | | −6 | 2 | -0.9* | 400* | 1 | 60 | F-48C |
| 2SA 230 | " | " | −20 | −0.2 | −5 | 75 | 85 | −10 | −12 | | | | −6 | 2 | -0.9* | 400* | 1 | 50 | F-48C |
| 2SA 321 | RF | Ge.A | −40 | −12 | −400 | 3W (Tc = 25°C) | 70 | −50 | −40 | | | | −6 | 70 | 60 | 2.5 | 70 | 60 | F-83 |
| 2SA 232 | " | " | −30 | −12 | −400 | 3W (Tc = 25°C) | 70 | −50 | −30 | | | | −6 | 70 | 90 | 4 | 70 | 60 | F-83 |
| 2SA 233 | IF | Ge.Me | −20 | −0.5 | −10 | 80 | 85 | −30 | −20 | | | | −6 | 1 | 70 | 100 | 2.1 | 60* | F-13A |
| 2SA 234 | " | " | −20 | −0.5 | −10 | 80 | 85 | −30 | −20 | | | | −6 | 1 | 70 | 120 | 2.1 | 55* | F-13A |
| 2SA 235 | RF.Conv | " | −20 | −0.5 | −10 | 80 | 85 | −30 | −20 | | | | −6 | 1 | 90 | 135 | 2.1 | 50* | F-13A |
| 2SA 236 | IF | Ge.D | −18 | −0.5 | −5 | 55 | 75 | −12 | −18 | | | | −6 | 1 | -0.98* | 35 | 1.7 | 35 | F-13A |
| 2SA 237 | " | " | −18 | −0.5 | −5 | 55 | 75 | −12 | −12 | | | | −6 | 1 | -0.98* | 35 | 2.5 | 35 | F-13A |
| 2SA 238 | RF.IF.Conv Mix.Osc | Ge.Me | −25 | | −30 | 200 | 85 | −8 | −15 | | | | −6 | 5 | 30 | 700 | 2.5 | 35 | F-84C |
| 2SA 239 | RF | " | −20 | −0.2 | −5 | 75 | 85 | −10 | −12 | | | | −6 | 1 | -0.91* | 200* | 1.5 | 30 | F-48C |
| 2SA 240 | RF.Conv Mix.Osc | Ge.EMe | −20 | | −5 | 75 | 85 | −10 | −12 | | | | −6 | 1 | 20* | 200* | 1 | 25 | F-48C |
| 2SA 241 | " | Ge.AD | −20 | −0.4 | −5 | 50 | 75 | −13 | −10 | | | | −6 | 1 | 25 | 200* | 1.5 | 70 | F-72B |
| 2SA 242 | " | " | −20 | −0.4 | −5 | 50 | 75 | −13 | −10 | | | | −6 | 1 | | 250* | 1.5 | 70 | F-72B |
| 2SA 243 | " | " | −20 | −0.4 | −5 | 50 | 75 | −13 | −10 | | | | −6 | 1 | | 300* | 1.5 | 100 | F-72B |
| 2SA 243A | " | " | −20 | | −5 | 80 | 75 | −13 | −10 | | | | −6 | 1 | 25 | 300* | 1.5 | 100 | F-72N |
| 2SA 244 | R.F.Conv.Mix Osc.PA | Ge.Me | −25 | −0.5 | −30 | 200 | 85 | −8 | −15 | | | | −6 | 5 | 30 | 600 | 3 | | F-84C |
| 2SA 244A | " | " | −25 | −0.5 | −30 | 200 | 85 | −4 | −15 | | | | −6 | 5 | 30 | 400* | | | F-84C |
| 2SA 245 | " | " | −25 | −0.5 | −30 | 200 | 85 | −8 | −15 | | | | −6 | 5 | 30 | 700 | 2.5 | | F-84C |
| 2SA 246 | PA | " | −30 | −0.5 | −30 | 100 | 85 | −30 | −30 | | | | −6 | 5 | 70 | 160 | 3 | 70* | F-13A |
| 2SA 247 | SW | " | −10 | −1.2 | −30 | 100 | 85 | −5 | −10 | 125 | −3 | −20 | −3 | 20 | | 200 | 4 | 65 | F-13A |
| 2SA 248 | " | Ge.D | −40 | −2 | −200 | 125 | 75 | −8 | −12 | 60 | −1 | −200 | −6 | 1 | | 40 | 1 | 120 | F-13A |
| 2SA 249 | RF.IF.Conv Mix.Osc | " | −40 | | −10 | 110 | 75 | −16 | −10 | | | | −6 | 1 | 60 | 50 | 1.7 | 50 | F-12A |
| 2SA 250 | " | " | −100 | −0.7 | −10 | 110 | 75 | −16 | −10 | | | | −6 | 1 | 100 | 50 | 1.7 | 50 | F-12A |
| 2SA 251 | SW | Ge.MA | −15 | −15 | −50 | 50 | 80 | −5 | −6 | 50 | −1 | −15 | −6 | 1 | | 50 | 2.5 | 150 | F-60 |
| 2SA 252 | | " | −15 | −15 | −50 | 50 | 80 | −5 | −6 | 150 | −1 | −15 | −6 | 1 | | 80 | 2.5 | 150 | F-60 |
| 2SA 253 | RF | Ge.Me | −20 | | −30 | 200 | 85 | −8 | −15 | | | | −5 | 10 | 30 | 450 | 2.5 | 50 | F-84C |
| 2SA 254 | Conv | Ge.A | −12 | −0.5 | −10 | 55 | 85 | −10 | −12 | | | | −6 | 1 | 80 | 10 | 10 | 120 | F-4 |
| 2SA 255 | IF | " | −12 | −0.5 | −10 | 55 | 85 | −10 | −12 | | | | −6 | 1 | 50 | 5 | 10 | 100 | F-4 |
| 2SA 256 | RF.IF.Conv Mix.Osc | Ge.D | −20 | −0.5 | −10 | 55 | 85 | −10 | −12 | | | | −6 | 1 | 75 | 60 | 2.2 | 30 | F-4 |
| 2SA 257 | " | " | −20 | −0.5 | −10 | 55 | 85 | −10 | −12 | | | | −6 | 1 | 60 | 50 | 2.2 | 50 | F-4 |
| 2SA 258 | " | " | −20 | −0.5 | −10 | 55 | 85 | −10 | −12 | | | | −6 | 1 | 45 | 40 | 2.2 | 70 | F-4 |
| 2SA 259 | " | " | −20 | −0.5 | −10 | 55 | 85 | −10 | −12 | | | | −6 | 1 | 45 | 30 | 2.2 | 70 | F-4 |
| 2SA 260 | RF | Ge.Me | −20 | −0.4 | −10 | 100 | 85 | −15 | −15 | | | | −6 | 2 | 12 | 300* | 1.5 | 50 | F-48C |
| 2SA 261 | " | " | −20 | −0.4 | −10 | 100 | 85 | −15 | −15 | | | | −6 | 2 | 15 | 300* | 1.5 | 60 | F-48C |
| 2SA 262 | " | " | −20 | −0.4 | −10 | 100 | 85 | −15 | −15 | | | | −6 | 2 | 15 | 450* | 1.5 | 65 | F-48C |
| 2SA 263 | " | " | −20 | −0.4 | −5 | 60 | 85 | −15 | −15 | | | | −6 | 2 | 15 | 500* | 1.5 | 65 | F-48C |

**Pin Configurations are 1. Emitter, 2. Base, 3. Collector, 4. Shield, unless otherwise specified. (Outline Dimensions: mm)**

| TYPE NO. | USES | MATERIAL STRUCTURE | $V_{CBO}$ (V) | $V_{EBO}$ (V) | $I_C$ (mA) | Pd (mW) | Tj (°C) | $I_{CBO}$ (uA) | VALUE OF DC/PULSE | | | BIAS | | $h_{fe}$ $h_{fb}$* | $f_{ab}$ $f_T$ (Mc) | Cob (pF) | $r_{bb'}$ $h_{ie(real)}$* (Ω) | CASE STYLE |
|---|---|---|---|---|---|---|---|---|---|---|---|---|---|---|---|---|---|---|
| | | | | | | | | $V_{CB}$(V) | hFE | $V_{CE}$(V) | $I_C$(mA) | $V_{CB}$(V) | $I_e$(mA) | | | | | |
| 2SA 264 | RF | Ge.Me | −20 | −0.4 | −10 | 100 | 85 | −15 | −15 | | | | −6 | 2 | 15 | 450 | 1.5 | | F-48C |
| 2SA 265 | " | " | −20 | −0.4 | −10 | 100 | 85 | −15 | −15 | | | | −6 | 2 | 15 | 300 | 1.5 | | F-48C |
| 2SA 266 | RF.IF.Conv Mix.Osc | Ge.D | −20 | −0.5 | −10 | 80 | 85 | −10 | −12 | | | | −6 | 1 | 75 | 60 | 2.2 | 30 | F-12A |
| 2SA 267 | " | " | −20 | −0.5 | −10 | 80 | 85 | −10 | −12 | | | | −6 | 1 | 60 | 50 | 2.2 | 50 | F-12A |
| 2SA 268 | " | " | −20 | −0.5 | −10 | 80 | 85 | −10 | −12 | | | | −6 | 1 | 45 | 40 | 2.2 | 70 | F-12A |
| 2SA 269 | " | " | −20 | −0.5 | −10 | 80 | 85 | −10 | −12 | | | | −6 | 1 | 45 | 30 | 2.2 | 70 | F-12A |
| 2SA 270 | Conv | " | −9 | −0.5 | −10 | 80 | 85 | −10 | −6 | | | | −3 | 1 | 75 | 50 | 2 | 50 | F-12A |
| 2SA 271 | " | " | −9 | −0.5 | −10 | 80 | 85 | −0 | −6 | | | | −3 | 1 | 60 | 30 | 3 | 50 | F-12A |
| 2SA 272 | IF | " | −9 | −0.5 | −10 | 80 | 85 | −10 | −6 | | | | −3 | 1 | 45 | 20 | 3 | 50 | F-12A |
| 2SA 273 | Conv | " | −34 | −1 | −10 | 80 | 85 | −7 | −12 | | | | −12 | 1 | 45 | 40 | 2 | 50 | F-12A |
| 2SA 274 | IF | " | −34 | −1 | −10 | 80 | 85 | −7 | −12 | | | | −12 | 1 | 40 | 30 | 2 | 50 | F-12A |
| 2SA 275 | RF | " | −34 | −1 | −10 | 80 | 85 | −5 | −12 | | | | −12 | 1 | 60 | 45 | 2 | 50 | F-12A |
| 2SA 276 | SW | Ge.Me | −15 | −2 | −20 | 75 | 75 | −5 | −12 | 60 | −0.5 | −10 | −6 | 2 | | 210* | 3.5 | | F-48C |
| 2SA 277 | " | Ge.A | −18 | −12 | −40 | 65 | 75 | −3 | −12 | 50 | −1 | −24 | −6 | 1 | | 3.5-13 | | | F-84A |
| 2SA 278 | " | " | −18 | −12 | −40 | 65 | 75 | −3 | −12 | 100 | −1 | −24 | −6 | 1 | | > 11 | | | F-84A |
| 2SA 279 | RF.IF.Conv Mix.Osc | Ge.Ad | −30 | | −30 | 120 | 75 | −6 | −6 | | | | −2 | 10 | 200 | 150* | 4 | 50 | F-72A |
| 2SA 280 | RF.Conv.Mix Osc.PA | " | −30 | | −30 | 120 | 75 | −6 | −6 | | | | −2 | 10 | 200 | 70 | 2 | 50 | F-72A |
| 2SA 281 | " | " | −50 | | −30 | 120 | 75 | −6 | −6 | | | | −2 | 10 | 200 | 100 | 2 | 50 | F-72A |
| 2SA 282 | SW | Ge.A | −18 | −12 | −200 | 150 | 75 | −7 | −12 | 80 | −0.5 | −100 | −6 | 1 | | 6 | | | F-84A |
| 2SA 283 | " | " | −18 | −12 | −200 | 150 | 75 | −7 | −12 | 80 | −0.5 | −100 | −6 | 1 | | 10 | | | F-84A |
| 2SA 284 | " | " | −18 | −12 | −200 | 150 | 75 | −7 | −12 | 80 | −0.5 | −100 | −6 | 1 | | 14 | | | F-84A |
| 2SA 285 | Conv | Ge.D | −18 | −0.5 | −5 | 50 | 75 | −15 | −18 | | | | −6 | 1 | 70 | 40 | 2 | 40 | F-13A |
| 2SA 286 | Conv.Mix | " | −18 | −0.5 | −5 | 50 | 75 | −15 | −18 | | | | −6 | 1 | 70 | 50 | 2 | 40 | F-13A |
| 2SA 287 | RF | " | −18 | −0.5 | −5 | 50 | 75 | −15 | −18 | | | | −6 | 1 | 70 | 60 | 2 | 40 | F-13A |
| 2SA 288 | " | Ge.Me | −20 | −0.5 | −10 | 80 | 85 | −30 | −20 | | | | −6 | 3 | 20 | 330* | 0.88 | 65 | F-72C |
| 2SA 289 | " | " | −20 | −0.5 | −10 | 80 | 85 | −30 | −20 | | | | −6 | 3 | 20 | 350* | 0.82 | 65 | F-72C |
| 2SA 290 | " | " | −20 | −0.5 | −10 | 80 | 85 | −30 | −20 | | | | −6 | 3 | 20 | 370* | 0.78 | 65 | F-72C |
| 2SA 291 | RF.IF.Conv Mix.Osc | Ge.MD | −20 | | −50 | 50 | 85 | −5 | −6 | | | | −6 | 4 | 40 | 100 | 1.5 | 40 | F-60 |
| 2SA 293 | RF | " | −15 | | −50 | 50 | 85 | −5 | −6 | | | | −6 | 4 | 40 | 300* | 1.5 | 50 | F-60 |
| 2SA 296 | IF | Ge.A | −15 | | −15 | 80 | 85 | −5 | −12 | | | | −6 | 1 | 45 | 5 | 13 | 80 | F-12B |
| 2SA 297 | RF | Ge.A | −16 | | −15 | 80 | 85 | −5 | 12 | | | | −6 | 1 | 65 | 10 | 13 | 80 | F-12B |
| 2SA 298 | Conv.Mix Osc | Ge.D | −40 | | −10 | 80 | 85 | −8 | −12 | | | | −6 | 1 | 55 | 35 | 2.5 | 40 | F-13B |
| 2SA 299 | RF.IF | Ge.A | −15 | | −10 | 50 | 75 | −11 | −6 | | | | −6 | 1 | 60 | | | | F-6 |
| 2SA 300 | " | " | −15 | | −10 | 50 | 75 | −11 | −6 | | | | −6 | 1 | 60 | | | | F-12B |
| 2SA 301 | SW | Ge.AD | −30 | −0.5 | −30 | 120 | 75 | −6 | −6 | 125 | −1 | −10 | | | | | | | F-72B |
| 2SA 302 | " | Ge.A | −20 | −15 | −100 | 83 | 75 | −3 | −5 | 20 | −0.7 | −100 | | | | | | | F-20 |
| 2SA 303 | " | " | −20 | −15 | −100 | 83 | 75 | −3 | −5 | 50 | −0.7 | −100 | | | | | | | F-20 |
| 2SA 304 | RF.IF.Conv Mix.Osc | " | −18 | −12 | −40 | 65 | 75 | −4 | −12 | | | | −6 | 1 | 70 | 4.5 | 11 | 80 | F-84A |
| 2SA 305 | " | " | −18 | −12 | −40 | 65 | 75 | −4 | −12 | | | | −6 | 1 | 70 | 10 | 11 | 80 | F-84A |
| 2SA 306 | " | Ge.D | −40 | | −10 | 80 | 85 | −8 | −12 | | | | −6 | 1 | 65 | 55 | 2.3 | 50 | F-13B |
| 2SA 307 | " | " | −40 | | −10 | 80 | 85 | −8 | −12 | | | | −6 | 1 | 70 | 75 | 2.2 | 50 | F-13B |
| 2SA 308 | " | Ge.AD | −20 | −0.3 | −5 | 83 | 75 | −13 | −12 | 20 | −12 | −1 | −12 | 1 | 250 | 450* | 0.5 | 35 | F-72A |
| 2SA 309 | " | " | −20 | −0.3 | −5 | 83 | 75 | −13 | −12 | 20 | −12 | −1 | −12 | 1 | 250 | 600* | 0.5 | 20 | F-72A |
| 2SA 310 | " | " | −32 | −0.3 | −25 | 166 | 75 | −13 | −12 | 20 | −12 | −1 | −12 | 1 | 250 | 650* | 0.7 | 60 | F-72A |
| 2SA 311 | SW | Ge.D | −40 | −2 | −400 | 150 | 75 | −6 | −12 | 65 | −1 | −400 | −6 | 1 | | 50 | 3 | 40 | F-84A |
| 2SA 312 | " | " | −40 | −2 | −400 | 150 | 75 | −6 | −12 | 40 | −1 | −200 | −6 | 1 | | 50 | 3 | 40 | F-84A |
| 2SA 313 | RF.IF.Conv Mix.Osc | " | −18 | −0.5 | −20 | 60 | 75 | −6 | −12 | | | | −6 | 1 | 60 | 40 | 2 | 40 | F-84A |
| 2SA 314 | " | " | −18 | −0.5 | −20 | 60 | 75 | −6 | −12 | | | | −6 | 1 | 100 | 40 | 2 | 40 | F-84A |
| 2SA 315 | " | " | −18 | −0.5 | −20 | 60 | 75 | −6 | −12 | | | | −6 | 1 | 110 | 55 | 2 | 40 | F-84A |
| 2SA 316 | " | " | −18 | −0.5 | −20 | 60 | 75 | −6 | −12 | | | | −6 | 1 | 110 | 75 | 2 | 40 | F-84A |
| 2SA 321 | IF" | | −20 | −1.5 | −15 | 70 | 75 | −15 | −15 | | | | −6 | 1 | 70 | 30 | 2.5-4.5 | 30 | F-12A |
| 2SA 322 | " | " | −20 | −1.5 | −15 | 70 | 75 | −15 | −15 | | | | −6 | 1 | 70 | 35 | 2-5 | 30 | F-12A |
| 2SA 323 | Conv | " | −20 | −1.5 | −15 | 70 | 75 | −15 | −15 | | | | −6 | 1 | 80 | 40 | 1.5-5.5 | 30 | F-12A |
| 2SA 324 | RF.IF | " | −20 | −1.5 | −15 | 70 | 75 | −15 | −15 | | | | −6 | 1 | 70 | 55 | 3.5 | 35 | F-12A |
| 2SA 325 | SW | Ge.A | −20 | −15 | −80 | 80 | 85 | −5 | −12 | 60 | −1 | −80 | | | | | | | F-12B |
| 2SA 326 | " | " | −20 | −15 | −80 | 80 | 85 | −5 | −12 | 60 | −1 | −80 | | | | | | | F-12B |
| 2SA 327 | " | Ge.D | −40 | −2 | −80 | 80 | 85 | −5 | −12 | 30 | −1 | −80 | | | | | | | F-13B |
| 2SA 328 | IF | " | −20 | −0.5 | −10 | 50 | 75 | −20 | −9 | | | | −6 | 1 | 60 | | <3 | | F-13B |
| 2SA 329 | " | " | −20 | −1.5 | −10 | 50 | 75 | −15 | −12 | | | | −6 | 1 | 13-550 | 5-6 | 1.5-6.5 | 90 | F-12A |
| 2SA 330 | RF.IF | " | −20 | −1.5 | −10 | 50 | 75 | −15 | −12 | | | | −6 | 113-550 | | 1.5-6.5 | | | F-12A |

**Pin Configurations are 1. Emitter, 2. Base, 3. Collector, 4. Shield, unless otherwise specified. (Outline Dimensions: mm)**

| TYPE NO. | USES | MATERIAL STRUCTURE | $V_{CBO}$ (V) | $V_{EBO}$ (V) | $I_C$ (mA) | Pd (mW) | Tj (°C) | $I_{CBO}$ (uA) | VALUE OF DC/PULSE | | | BIAS | | hfe hfb* | fab fT (Mc) | Cob (pF) | $r_{bb'}$ $h_{ie(real)}$* (Ω) | CASE STYLE |
|---|---|---|---|---|---|---|---|---|---|---|---|---|---|---|---|---|---|---|
| | | | | | | | | $V_{CB}$(V) | hFE | $V_{CE}$(V) | $I_C$(mA) | $V_{CB}$(V) | $I_e$(mA) | | | | | |
| 2SA 331 | Conv | Ge.D | −40 | −1.5 | −50 | 120 | 75 | −15 | −15 | | | | −6 | 1 | 30-300 | >40 | 2-5 | 50 | F-12A |
| 2SA 332 | " | " | −20 | −0.5 | −10 | 50 | 75 | −20 | −9 | | | | −6 | 1 | 110 | 60 | 3 | 150 | F-13B |
| 2SA 333 | Osc | " | −20 | −0.5 | −10 | 50 | 75 | −20 | −9 | | | | −6 | 1 | 30 | 55 | 3 | 150 | F-13B |
| 2SA 334 | Mix | " | −20 | −0.5 | −10 | 50 | 75 | −20 | −9 | | | | −6 | 1 | 30 | 65 | 3 | 150 | F-13B |
| 2SA 336 | IF | " | −9 | −0.5 | −10 | 80 | 85 | −15 | −9 | | | | −3 | 1 | 70 | 2.6 | 40 | | F-13A |
| 2SA 337 | Conv | " | −9 | −0.5 | −10 | 80 | 85 | −15 | −9 | | | | −3 | 1 | 70 | 35 | 2.6 | 40 | F-13A |
| 2SA 338 | RF.IF.Conv Mix.Osc | " | −20 | −0.5 | −5 | 50 | 75 | −16 | −10 | | | | −6 | 1 | 30 | 15 | 2.5 | 15 | F-4 |
| 2SA 339 | " | " | −20 | −0.5 | −5 | 50 | 75 | −16 | −10 | | | | −6 | 1 | 50 | 30 | 2.5 | 20 | F-4 |
| 2SA 340 | RF.Conv.Mix Osc | Ge.AD | −20 | −0.5 | −10 | 63 | 75 | −13 | −6 | | | | −6 | 1 | 100 | 70 | 2 | 50 | F-50C |
| 2SA 341 | " | " | −20 | −0.5 | −10 | 63 | 75 | −13 | −6 | | | | −6 | 1 | 100 | 70 | 2 | 50 | F-50C |
| 2SA 342 | " | " | −20 | −0.5 | −10 | 63 | 75 | −13 | −6 | | | | −6 | 1 | 100 | 100 | 2 | 40 | F-50C |
| 2SA 343 | RF.Conv.Mix Osc.PA | " | −20 | −0.4 | −5 | 86 | 75 | −12 | −10 | | | | −6 | 1 | 100 | 100* | 1.5 | 50 | F-72B |
| 2SA 344 | " | " | −30 | −0.5 | −30 | 120 | 75 | −6 | −6 | | | | −2 | 10 | 200 | 100 | 4 | 35 | F-13B |
| 2SA 345 | RF | Ge.Me | −20 | −0.5 | −10 | 60 | 85 | −30 | | | | | −6 | 1 | 30 | >250* | 1.2 | <100 | F-48C |
| 2SA 346 | " | " | −20 | −0.5 | −10 | 60 | 85 | −30 | | | | | −6 | 1 | 30 | >250* | 1.2 | <100 | F-48C |
| 2SA 347 | " | " | −20 | −0.5 | −10 | 60 | 85 | −30 | | | | | −6 | 1 | 30 | >250* | 1.2 | <100 | F-48C |
| 2SA 348 | " | " | −20 | −0.5 | −10 | 60 | 85 | −30 | | | | | −6 | 1 | 10 | >200* | 1.5 | <120 | F-48C |
| 2SA 349 | " | " | −20 | −0.5 | −10 | 60 | 85 | −30 | | | | | −6 | 1 | 10 | >100* | 1.5 | <120 | F-48C |
| 2SA 350 | RF.Conv Mix.Osc | Ge.D | −20 | −0.5 | −10 | 80 | 85 | −10 | −12 | | | | −9 | 1 | 90 | 40 | 2.5 | 30* | F-12A |
| 2SA 351 | RF.Osc | " | −20 | −0.5 | −10 | 80 | 85 | −10 | −12 | | | | −9 | 1 | 70 | 40 | 2.5 | 30* | F-12A |
| 2SA 352 | RF.Conv.Mix | " | −20 | −0.5 | −10 | 80 | 85 | −10 | −12 | | | | −9 | 1 | 75 | 40 | 2.5 | 30* | F-12A |
| 2SA 353 | RF | " | −25 | −0.5 | −10 | 80 | 85 | −10 | −12 | | | | −9 | 1 | 70 | 30 | 2.5 | 30* | F-12A |
| 2SA 354 | Conv.Mix | " | −25 | −0.5 | −10 | 80 | 85 | −10 | −12 | | | | −9 | 1 | 70 | 30 | 2.5 | 30* | F-12A |
| 2SA 355 | RF | " | −25 | −0.5 | −10 | 80 | 85 | −10 | −12 | | | | −9 | 1 | 70 | 30 | 2.5 | 30* | F-12A |
| 2SA 356 | " | " | −9 | −0.5 | −10 | 80 | 85 | −15 | −9 | | | | −3 | 1 | 80 | 25 | 2.8 | 30 | F-12A |
| 2SA 357 | Conv.Mix | " | −9 | −0.5 | −10 | 80 | 85 | −15 | −9 | | | | −3 | 1 | 70 | 30 | 1.8 | 30 | F-12A |
| 2SA 358 | RF | " | −75 | −1 | −50 | 225 | 85 | −12 | −12 | | | | −9 | 1 | 90 | 40 | 2.5 | 35* | F-64 |
| 2SA 359 | " | Ge.Me | −20 | −0.4 | −20 | 270 | 85 | −15 | −20 | | | | −6 | 5 | 30 | 300* | 3.5 | 75 | F-84B |
| 2SA 360 | " | Ge.DB | −20 | −0.5 | −10 | 80 | 85 | −30 | −20 | | | | −6 | 1 | 70 | 110 | 2.3 | 85 | F-13A |
| 2SA 361 | RF.Conv Mix.Osc | " | −20 | −0.5 | −10 | 80 | 85 | −30 | −20 | | | | −6 | 1 | 70 | 125 | 2.3 | 80 | F-13A |
| 2SA 362 | PA | Ge.DB | −30 | −0.5 | −30 | 100 | 85 | −30 | −30 | | | | −6 | 5 | 70 | 150* | 3 | 70 | F-13A |
| 2SA 363 | SW | " | −10 | −1.2 | −30 | 100 | 85 | −5 | −10 | | | | −3 | 20 | 80 | | | | F-13A |
| 2SA 364 | RF | " | −9 | −0.5 | −10 | 80 | 85 | −30 | −9 | | | | −3 | 1 | 60 | 45 | 6 | 100 | F-13A |
| 2Sa 365 | Mix.Osc | " | −9 | −0.5 | −10 | 80 | 85 | −30 | −9 | | | | −3 | 1 | 60 | 50 | 6 | 70 | F-13A |
| 2SA 366 | RF.Conv | " | −9 | −0.5 | −10 | 80 | 85 | −30 | −9 | | | | −3 | 1 | 60 | 75 | 6 | 50 | F-13A |
| 2SA 367 | RF | Ge.D | −20 | −0.5 | −10 | 80 | 85 | −15 | −12 | | | | −9 | 1 | 70 | 30 | 2.5 | 40 | F-12A |
| 2SA 368 | | " | −20 | −0.5 | −10 | 80 | 85 | −15 | −12 | | | | −9 | 1 | 70 | 40 | 2.5 | 30 | F-12A |
| 2SA 369 | RF | " | −20 | −0.5 | −10 | 80 | 85 | −15 | −12 | | | | −9 | 1 | 80 | 50 | 2.5 | 30 | F-12A |
| 2SA 370 | " | " | −75 | −1 | −50 | 120 | 85 | −12 | −12 | | | | −9 | 1 | 70 | 40 | 2.5 | 40 | F-65 |
| 2SA 371 | SW | Ge.A | −20 | −12 | −15 | 80 | 85 | −6 | −12 | 70 | 1.5 | −10 | | | | 10.5* | 10 | 110 | F-12A |
| 2SA 372 | " | Ge.EMe | −15 | −2 | −200 | 100 | 75 | −10 | −12 | 25 | −1 | −10 | −3 | 5 | | 450 | 2 | 120 | F-49C |
| 2SA 373 | RF | " | −25 | −0.5 | −150 | 250 | 85 | −15 | −10 | | | | −10 | 5 | 40 | 400* | 3.2 | 100 | F-84A |
| 2SA 373A | " | " | −25 | −0.5 | −150 | 250 | 85 | −15 | −10 | | | | −10 | 5 | 40 | 400* | 3.2 | 100 | F-84A |
| 2SA 374 | RF.Conv.Mix Osc.PA | Ge.AD | −34 | −0.5 | −300 | 1.5W (Tc = 25°C) | 90 | −12 | −10 | | | | −2 | 150 | 100 | 300* | 13 | 10 | F-84A |
| 2SA 375 | | Ge.D | −30 | −1.5 | −100 | 80 | 85 | −6 | −12 | 40 | −1 | −50 | −9 | 1 | 80 | 40 | 2.5 | 30 | F-12A |
| 2SA 376 | RF.Conv.Mix | Ge.DB | −22 | | −10 | 60 | 85 | −6 | −10 | 48 | −3 | −1 | −6 | 2 | 0.96* | | 0.4 | 70* | F-52 |
| 2SA 377 | RF.Conv.Mix Osc | Ge.AD | −20 | −0.4 | −5 | 50 | 75 | −13 | −10 | | | | −6 | 1 | 100 | 200* | 1.5 | 60 | F-50C |
| 2SA 378 | " | " | −20 | −0.4 | −5 | 50 | 75 | −13 | −10 | | | | −6 | 1 | 100 | 250* | 1.5 | 30 | F-50C |
| 2SA 379 | " | " | −20 | −0.4 | −5 | 50 | 75 | −13 | 10 | | | | −6 | 1 | 100 | 300* | 1.5 | 30 | F-50C |
| 2SA 380 | RF.Conv | Ge.D | −25 | −0.5 | −10 | 80 | 85 | −12 | −12 | | | | −6 | 1 | 70 | 60 | 2.2 | 40 | F-12A |
| 2SA 381 | Osc | " | −25 | −0.5 | −10 | 80 | 85 | −12 | −12 | | | | −6 | 1 | 50 | 35 | 2.5 | 40 | F-12A |
| 2SA 382 | Mix | " | −25 | −0.5 | −10 | 80 | 85 | −12 | −12 | | | | −6 | 1 | 55 | 30 | 2.2 | 40 | F-12A |
| 2SA 383 | RF | " | −25 | −0.5 | −10 | 80 | 85 | −12 | −12 | | | | −6 | 1 | 40 | 25 | 2.5 | 40 | F-12A |
| 2SA 384 | Conv | " | −25 | −0.5 | −10 | 80 | 85 | −12 | −12 | | | | −6 | 1 | 60 | 40 | 2.5 | 40 | F-12A |
| 2SA 385 | RF | Ge.A | −16 | −10 | −10 | 80 | 75 | −12 | −10 | | | | −6 | 1 | 120 | 10 | 8 | 120 | F-12A |
| 2SA 386 | RF.Conv Mix.Osc | Ge.AD | −32 | −0.5 | −300 | 1.85W (Tc = 25°C) | 90 | −12 | −10 | | | | −2 | 100 | 80 | 350* | 12 | 8 | F-84B |
| 2SA 387 | " | Ge.A | −10 | | −15 | 100 | 85 | −50 | −10 | | | | −6 | 1 | 30 | | 10 | 50 | F-12A |
| 2SA 388 | | | | | | | | | | | | | | | | | | | |
| 2SA 389 | RF | Ge.Me | −20 | −0.3 | −10 | 50 | 85 | −30 | −20 | | | | −10 | 2 | 30 | 600* | 0.4 | $C_{rbb'}$ 10pS | F-50C |
| 2SA 390 | " | " | −20 | −0.3 | −10 | 50 | 85 | −30 | −20 | | | | −10 | 2 | 30 | 700* | 0.4 | $C_{rbb'}$ 9.5pS | F-50C |

**Pin Configurations are 1. Emitter, 2. Base, 3. Collector, 4. Shield, unless otherwise specified. (Outline Dimensions: mm)**

| TYPE NO. | USES | MATERIAL STRUCTURE | $V_{CBO}$ (V) | $V_{EBO}$ (V) | $I_C$ (mA) | Pd (mW) | Tj (°C) | $I_{CBO}$ (uA) | VALUE OF DC/PULSE $V_{CB}$(V) | hFE | $V_{CE}$(V) | $I_C$(mA) | BIAS $V_{CB}$(V) | $I_e$(mA) | hfe hfb* | fab fT (Mc) | Cob (pF) | $r_{bb'}$ $h_{ie(real)}$* (Ω) | CASE STYLE |
|---|---|---|---|---|---|---|---|---|---|---|---|---|---|---|---|---|---|---|---|
| 2SA 391 | RF | Ge.A | −18 | −12 | −200 | 150 | 85 | −6 | −6 | | | | −5 | 1 | 70 | 7 | 10 | 150 | F-84B |
| 2SA 392 | " | " | −18 | −12 | −200 | 150 | 85 | −6 | −6 | | | | −5 | 1 | 100 | 11 | 9.5 | 175 | F-84B |
| 2SA 393 | " | " | −18 | −12 | −200 | 150 | 85 | −6 | −6 | | | | −5 | 1 | 150 | 16 | 9.2 | 200 | F-84B |
| 2SA 393A | " | " | −30 | −12 | −200 | 150 | 85 | −6 | −6 | | | | −5 | 1 | 150 | 16 | 9.2 | 230 | F-84B |
| 2SA 394 | " | " | −18 | −12 | −200 | 150 | 85 | −6 | −6 | | | | −5 | 1 | 200 | 22 | 8.7 | 230 | F-84B |
| 2SA 395 | " | " | −18 | −12 | −200 | 150 | 85 | −6 | −6 | | | | −5 | 1 | 300 | 29 | 8.5 | 260 | F-84B |
| 2SA 396 | " | " | −15 | −15 | −200 | 200 | 85 | −10 | −12 | | | | −5 | 1 | 85 | 6 | 20 | 150 | F-84B |
| 2SA 397 | " | " | −23 | −15 | −200 | 200 | 85 | −10 | −12 | | | | −5 | 1 | 100 | 8 | 20 | 150 | F-84B |
| 2SA 398 | " | " | −30 | −20 | −200 | 200 | 85 | −10 | −12 | | | | −5 | 1 | 120 | 10 | 19 | 160 | F-84B |
| 2SA 399 | " | " | −30 | −20 | −200 | 200 | 85 | −10 | −12 | | | | −5 | 1 | 70 | 12 | 17 | 160 | F-84B |
| 2SA 400 | RF.Conv.Mix Osc | Ge.D | −20 | −0.5 | −10 | 80 | 85 | −10 | −12 | | | | −6 | 1 | 70 | 70 | 2.3 | 50 | F-13A |
| 2SA 401 | RF | Ge.Me | −30 | −0.5 | −40 | 130 | 85 | −30 | −30 | | | | −6 | 5 | 70 | 30 | 3 | 70 | F-13A |
| 2SA 402 | " | Si.EP | −35 | | −100 | 250 | 175 | −1 | −15 | 200 | −6 | −2 | −6 | 1 | | 200* | 6 | 30 | F-49C |
| 2SA 403 | Rf.If.Conv Mix.Osc | Ge.Me | −20 | −0.2 | −5 | 75 | 85 | −10 | −12 | | | | −6 | 2 | 10 | 280* | 1.5 | 40 | F-19B |
| 2SA 404 | " | " | −20 | −0.2 | −5 | 75 | 85 | −10 | −12 | | | | −6 | 2 | 10 | 400* | 1.5 | 40 | F-59 |
| 2SA 405 | SW | " | −15 | −3.5 | −50 | 150 | 100 | −3 | −5 | 40 | −0.5 | −10 | −3 | 10 | | 300* | 5 | | F-49C |
| 2SA 406 | " | Ge.A | −30 | −20 | −200 | 200 | 85 | −7 | −15 | 50 | −1 | −10 | −6 | 1 | 60 | 9 | 15 | 120 | F-84A |
| 2SA 407 | " | " | −30 | −20 | −200 | 200 | 85 | −7 | −12 | 60 | −1 | −10 | −6 | 1 | 70 | 14 | 15 | 130 | F-84A |
| 2SA 408 | " | Ge.MA | −15 | −15 | −50 | 50 | 80 | −5 | −6 | 100 | −1 | −15 | −6 | 1 | | 50 | 3 | | F-60 |
| 2SA 409 | " | " | −15 | −15 | −50 | 50 | 80 | −5 | −6 | 100 | −1 | −15 | −6 | 1 | | 80 | 3 | | F-60 |
| 2SA 410 | " | Ge.EMe | −12 | -1 | −150 | 150 | 100 | −5 | −5 | 40 | −0.3 | −10 | −3 | 10 | | 300 | 1.5 | | F-49C |
| 2SA 411 | " | " | −15 | −2.5 | −150 | 150 | 100 | −5 | −5 | 40 | −0.3 | −10 | −3 | 10 | | 300 | 1.5 | | F-49C |
| 2Sa 412 | " | GeMe | −13 | −1 | −100 | 150 | 85 | −3 | −6 | 50 | −0.5 | −30 | −3 | 10 | | 40* | 7 | | F-12A |
| 2SA 413 | " | Ge.AD | −20 | −2.5 | −30 | 100 | 75 | −5 | −5 | 90 | −1 | −30 | −2 | 30 | | > 300* | 4 | | F-49C |
| 2Sa 414 | " | Ge.A | −30 | −20 | −200 | 150 | 85 | −3 | −5 | 40 | −0.5 | −100 | −5 | 3 | | 7* | 9 | | F-84A |
| 2SA 415 | " | " | −25 | −20 | −200 | 150 | 85 | −3 | −5 | 60 | −0.5 | −100 | −5 | 3 | | 10* | 9 | | F-84A |
| 2SA 416 | " | " | −70 | −1.5 | −700 | 6W (Tc = 25°C) | 75 | −1mA | −60 | 100 | −10 | −600 | −10 | 300 | | 120* | 35 | | F-103 |
| 2SA 417 | " | Ge.EMe | −15 | −2.5 | −200 | 150 | 100 | −5 | −10 | 70 | −0.3 | −10 | | | | | | | F-46C |
| 2SA 419 | " | Ge.Me | −20 | | −5 | 50 | 85 | −10 | 12 | | | | −6 | 2 | 20 | | | | F-48C |
| 2SA 420 | " | " | −20 | | −5 | 50 | 85 | −10 | −12 | | | | −6 | 2 | 25 | 550 | 2 | | F-48C |
| 2SA 421 | SW | Ge.Me | −20 | | −5 | 50 | 85 | −10 | −12 | | | | −12 | 2 | 25 | | | | F-48C |
| 2SA 422 | RF | " | −20 | −0.3 | −5 | 50 | 85 | −10 | −12 | | | | −12 | 2 | 25 | 800 | 0.8 | | F-48C |
| 2SA 423 | " | Ge.EMe | −20 | | −5 | 50 | 85 | −10 | −12 | | | | −12 | 2 | 25 | | | | F-48C |
| 2SA 424 | " | " | −20 | | −5 | 50 | 85 | −10 | −12 | | | | −12 | 2 | 25 | | | | F-48C |
| 2SA 425 | " | Ge.Me | −30 | | −30 | 200 | 85 | −10 | −15 | | | | −6 | 2 | 25 | 350* | 3.3 | 60* | F-84B |
| 2SA 426 | " | " | −30 | | −30 | 200 | 85 | −10 | −15 | | | | −6 | 2 | 30 | 500* | 2.5 | 60* | F-84B |
| 2SA 427 | " | Ge.D | −20 | −0.5 | −15 | 100 | 75 | −15 | −15 | | | | −6 | 1 | 60 | 45 | 3.5 | 40 | F-13B |
| 2SA 428 | " | " | −20 | −0.5 | −15 | 100 | 75 | −15 | −15 | | | | −6 | 1 | 80 | 50 | 3.5 | 30 | F-13B |
| 2SA 429 | " | Si.TP | −150 | −3 | −30 | 150 | 125 | −1 | −50 | 60 | −2 | −2 | −10 | 2 | | 100* | 4 | 50 | F-33 |
| 2SA 430 | " | Ge.Me | −20 | | −5 | 70 | 85 | −10 | −12 | | | | 6 | 1 | -0.95* | >450* | < 0.8 | < 60 | 50C |
| 2SA 431 | " | " | −20 | | −5 | 70 | 85 | −10 | −12 | | | | −6 | 1 | -0.94* | | | | F-50C |
| 2SA 432 | " | " | −20 | | −5 | 70 | 85 | −10 | −12 | | | | −6 | 1 | -0.94* | | | | F-50C |
| 2SA 433 | " | Ge.D | −18 | | −5 | 55 | 75 | −8 | −12 | | | | −6 | 1 | 50 | | < 3.5 | | F-13A |
| 2SA 434 | RF.Conv.Mix Osc | Ge.Me | −20 | −0.5 | −10 | 80 | 85 | −30 | −20 | | | | −6 | 8 | 80 | 880* | 0.9 | 80 | F-72A |
| 2SA 435 | " | " | −20 | −0.5 | −10 | 60 | 85 | −30 | −20 | | | | −6 | 3 | 30 | 330* | 0.9 | 80 | F-9 |
| 2SA 436 | " | " | −20 | −0.5 | −10 | 60 | 85 | −30 | −20 | | | | −6 | 3 | 30 | 400* | 0.98 | 65 | F-9 |
| 2SA 437 | " | " | −20 | −0.5 | −10 | 60 | 85 | −30 | −20 | | | | −6 | 3 | 30 | 400* | 0.92 | 65 | F-9 |
| 2SA 438 | " | " | −200 | −0.5 | −10 | 60 | 85 | −30 | −20 | | | | −6 | 3 | 30 | 520* | 0.88 | 65 | F-9 |
| 2SA 439 | | | | | | | | | | | | | | | | | | | |
| 2SA 440 | RF.Conv.Mix Osc | Ge.Me | −20 | −0.4 | −5 | 60 | 85 | −30 | −20 | | | | −6 | 2 | 50 | 350* | 1.5 | 70* | F-48C |
| 2SA 441 | " | " | −20 | | −10 | 150 | 85 | −30 | −20 | | | | −6 | 2 | 40 | 500* | 3.5 | 70 | F-84B |
| 2SA 442 | | | | | | | | | | | | | | | | | | | |
| 2SA 443 | Ch | Ge.A | −21 | −12 | −15 | 60 | 85 | −6 | −12 | 200 | −6 | −2 | −6 | 1 | | 25 | 10 | 70 | F-15 |
| 2SA 444 | | " | −16 | −12 | −12 | 60 | 85 | −6 | −12 | 80 | −6 | −1 | −6 | 1 | 80 | 12 | 7 | 70 | F-14 |
| 2SA 445 | | " | −16 | −12 | −15 | 60 | 85 | −6 | −12 | 75 | −6 | −1 | −6 | 1 | | 10 | 10 | 70 | F-15 |
| 2SA 446 | SW | Ge.EMe | −15 | −2 | −200 | 200 | 85 | −10 | −12 | 70 | −1 | −100 | | | | | | | F-84B |
| 2SA 447 | RF.Conv.Mix Osc | Ge.AD | −25 | | −15 | 90 | 75 | −3.5 | −10 | | | | −10 | 2 | 80 | 650* | 1.6 | 20 | F-57 |
| 2SA 448 | RF.Conv | Ge.Me | −15 | −0.5 | −5 | 40 | 75 | −10 | −10 | 20 | −3 | −3 | −3 | 3 | 30 | 1700* | 0.15 | | F-52 |
| 2SA 449 | SW | Ge.EMe | −10 | −1.25 | −100 | 150 | 100 | −5 | −6 | 30 | −1 | −50 | −1 | 20 | | 300* | 4 | | F-49C |
| 2SA 450 | " | " | −12 | −1.5 | −100 | 150 | 100 | −3 | −6 | 40 | −1 | −50 | −1 | 20 | | 500* | 2.5 | | F-49C |

**Pin Configurations are 1. Emitter, 2. Base, 3. Collector, 4. Shield, unless otherwise specified. (Outline Dimensions: mm)**

| TYPE NO. | USES | MATERIAL STRUCTURE | $V_{CBO}$ (V) | $V_{EBO}$ (V) | $I_C$ (mA) | Pd (mW) | Tj (°C) | $I_{CBO}$ (uA) | VALUE OF DC/PULSE $V_{CB}$(V) | $h_{FE}$ | $V_{CE}$(V) | $I_C$(mA) | BIAS $V_{CB}$(V) | $I_e$(mA) | hfe hfb* | fab fT (Mc) | Cob (pF) | $r_{bb'}$ $h_{ie}$(real)* (Ω) | CASE STYLE |
|---|---|---|---|---|---|---|---|---|---|---|---|---|---|---|---|---|---|---|---|
| 2SA 451 | SW | Ge.EMe | −12 | −1.5 | −100 | 150 | 100 | −3 | −6 | 70 | −1 | −50 | −1 | 20 | | 500* | 2.5 | | F-49C |
| 2SA 452 | " | " | −12 | −1.5 | −100 | 150 | 100 | −3 | −6 | 150 | −1 | −50 | −1 | 20 | | 500* | 2.5 | | F-49C |
| 2SA 453 | RF.Conv.Mix Osc | Ge.DB | −22 | | −10 | 60 | 85 | −5 | −15 | 6 | −3 | −1 | −6 | 2 | -0.93* | 630* | 0.45 | 70* | F-52 |
| 2SA 454 | " | " | −22 | | −10 | 60 | 85 | −5 | −15 | 12 | −3 | −1 | −6 | 2 | -0.96* | 0.45 | 70* | | F-52 |
| 2SA 455 | " | " | −22 | | −10 | 60 | 85 | −5 | −15 | 24 | −3 | −1 | −6 | 2 | -0.978* | 630* | 0.45 | 70* | F-52 |
| 2SA 456 | " | " | −22 | | −10 | 60 | 85 | −5 | −15 | 48 | −3 | −1 | −6 | 2 | -0.988* | 630* | 0.45 | 70* | F-52 |
| 2SA 457 | RF | Ge.D | −18 | −0.5 | −20 | 55 | 75 | −10 | −12 | | | | −6 | 1 | 200 | 45 | 3 | 150 | F-13A |
| 2SA 458 | SW | Ge.A | −25 | −15 | −200 | 150 | 85 | −5 | −12 | 60 | −1 | −10 | | | | | | | F-68 |
| 2SA 459 | " | " | −25 | −15 | −200 | 150 | 85 | −5 | −12 | 120 | −1 | −10 | | | | | | | F-68 |
| 2SA 460 | RF.Osc | Ge.Me | −20 | −0.5 | −10 | 60 | 85 | −30 | −20 | | | | −6 | 3 | 30 | 400* | 0.9 | 80* | F-11A |
| 2SA 461 | RF.Mix.Osc | " | −20 | −0.5 | −10 | 60 | 85 | −30 | −20 | | | | −6 | 3 | 30 | 400* | 0.9 | 65* | F-11A |
| 2SA 462 | RF | " | −20 | −0.5 | −10 | 60 | 85 | −30 | −20 | | | | −6 | 3 | 30 | 400* | 0.9 | 65* | F-11A |
| 2SA 463 | RF.Conv Mix.Osc | " | −20 | −0.5 | −10 | 75 | 85 | −30 | −20 | | | | −6 | 3 | 10 | 300* | 1 | 80* | F-11A |
| 2SA 464 | " | " | −15 | −0.3 | −10 | 60 | 85 | −10 | −15 | | | | −6 | 3 | 30 | 850* | 0.8 | | F-11A |
| 2SA 465 | RF.Conv Mix.Osc | Ge.AD | −20 | | −5 | 50 | 75 | −13 | −10 | | | | −10 | 1 | 250 | 600* | 0.5 | 20 | F-57 |
| 2SA 466 | RF.Conv Mix.Osc | Ge.D | −18 | | −10 | 55 | 85 | −12 | −18 | | | | −6 | 1 | 40 | 15* | 3 | 50 | F-12A |
| 2SA 467 | RF | Si.EP | −40 | −5 | −400 | 300 | 125 | −0.5 | −20 | 100 | −1 | −100 | −10 | 10 | 80 | 200* | 10 | 30 | F-33 |
| 2SA 468 | RF.Conv Mix.Osc | Ge.D | −18 | −0.5 | −10 | 55 | 85 | −12 | −18 | | | | −6 | 1 | 70 | 30* | 3 | 40 | F-12A |
| 2SA 469 | " | " | −18 | −0.5 | −10 | 55 | 85 | −12 | −18 | | | | −6 | 1 | 50 | 30* | 3 | 40 | F-12A |
| 2SA 469 | " | " | −18 | −0.5 | −10 | 55 | 85 | −12 | −18 | | | | −6 | 1 | 50 | 30* | 3 | 40 | F-12A |
| 2SA 470 | " | " | −18 | −0.5 | −10 | 55 | 85 | −12 | −18 | | | | −6 | 1 | 75 | 30* | 3 | 40 | F-12A |
| 2SA 471 | " | " | −18 | −0.5 | −10 | 55 | 85 | −12 | −18 | | | | −6 | 1 | 50 | | 3.5 | | F-12A |
| 2SA 472 | " | " | −18 | −0.5 | −10 | 55 | 85 | −12 | −18 | | | | −6 | 1 | 80 | 30* | 3 | 40 | F-12A |
| 2SA 473 | RF.PA | S.E | −30 | −5 | −3A ($T_C$=25°C) | 10W | 150 | −1 | −20 | 40-400 | −2 | −500 | −2 | 500 | | 100* | 40 | 15 | F-119 |
| 2SA 474 | RF.Conv.Mix Osc | Ge.D | −50 | −0.5 | −50 | 120 | 85 | −12 | −12 | | | | −6 | 1 | 50 | 70 | 4 | 30 | F-12A |
| 2SA 475 | " | " | −20 | −0.5 | −50 | 120 | 85 | −12 | −12 | | | | −6 | 1 | 50 | 30 | 4 | 30 | F-12A |
| 2SA 476 | " | " | −18 | −0.5 | −10 | 55 | 85 | −12 | −18 | | | | −6 | 1 | 60 | 65 | 1.5 | 40 | F-12A |
| 2SA 477 | RF | " | −18 | −0.5 | −10 | 55 | 85 | −12 | −18 | | | | −6 | 1 | 60 | | 1.5 | | F-12A |
| 2SA 478 | SW | " | −40 | −2 | −400 | 125 | 85 | −8 | −12 | 60 | −1 | 400 | −6 | 1 | | >25 | <6 | <120 | F-12A |
| 2SA 479 | " | " | −40 | −2 | −200 | 125 | 85 | −8 | 12 | 50 | −1 | −200 | −6 | 1 | | >25 | 3 | <120 | F-12A |
| 2SA 480 | RF | Si.E | −30 | −5 | −100 | 150 | 150 | −3 | −25 | 60 | −3 | −3 | −6 | 1 | 120 | | 3 | | F-60 |
| 2SA 481 | | | | | | | | | | | | | | | | | | | |
| 2SA 482 | PA | Si.EP | −40 | −5 | −600 | 600 | 150 | −1 | −30 | 50 | −2 | −150 | −10 | 10 | 50 | 70* | 20 | 10 | F-84B |
| 2SA 483 | RF.AF.PA. | | −150 | −5 | −1.5A | 20W ($T_C$=25°C) | 150 | −100 | −150 | 30-240 | −10 | −100 | −10 | 100 | | 10* | 50 | 25 | F-99 |
| 2SA 484 | PA | Si.E | −110 | −5 | −1.5A | 800 | 175 | −10 | −30 | 80 | −2 | −200 | −10 | 30 | | 20* | 60 | 10 | F-84B |
| 2SA 485 | " | " | −80 | −5 | −1.5A | 800 | 175 | −10 | −30 | 80 | −2 | −200 | −10 | 30 | | 20* | 60 | 10 | F-84B |
| 2SA 486 | " | " | −50 | −5 | −1.5A | 800 | 175 | −10 | −30 | 80 | −2 | −200 | −10 | 30 | | 20* | 60 | 10 | 84B |
| 2SA 487 | | | | | | | | | | | | | | | | | | | |
| 2SA 488 | | | | | | | | | | | | | | | | | | | |
| 2SA 489 | RF.PA | Si.EMe | −70 | −5 | −4A | 30W ($T_C$=25°C) | 150 | −30 | −50 | 40-240 | −5 | −500 | −5 | 500 | | > 3* | 230 | 15 | F-119 |
| 2SA 490 | PA | " | −50 | −5 | −3A | 25W ($T_C$=25°C) | 150 | −20 | −30 | 40-240 | −2 | −500 | −2 | 500 | | > 3* | 150 | 15 | F-119 |
| 2SA 491 | | | | | | | | | | | | | | | | | | | |
| 2SA 492 | | | | | | | | | | | | | | | | | | | |
| 2SA 493 | RF.LN | Si.E | −50 | −5 | −50 | 200 | 125 | −0.1 | −30 | 20-400 | −6 | −2 | −6 | 1 | | 200* | 5 | 30 | F-33 |
| 2SA 494 | LN | " | −35 | −5 | −30 | 200 | 125 | −0.5 | −15 | 70-400 | −6 | −0.1 | −6 | 0.1 | | 200* | 4 | 30* | F-33 |
| 2SA 495 | RF | " | −35 | −5 | −100 | 200 | 125 | −0.5 | −15 | 70-240 | −1 | −10 | −10 | 10 | | 200* | 4 | 30 | F-33 |
| 2SA 496 | PA | " | −40 | −5 | −800 | 550 | 125 | −1 | −30 | 40-240 | −2 | −50 | −10 | 10 | | 100* | 20 | 10 | 164 |
| 2SA 497 | " | SiEP | −80 | −5 | −800 | 600 | 150 | −1 | −30 | 40-240 | −2 | −200 | −10 | 10 | | 70* | 33 | 15 | F-84B |
| 2SA 498 | " | " | −50 | −5 | −800 | 600 | 150 | −1 | −30 | 40-240 | −2 | −200 | −10 | 10 | | 70* | 33 | 15 | F-84B |
| 2SA 499 | " | SiE | −50 | −5 | −100 | 250 | 175 | −0.5 | −15 | 60-200 | −1 | −10 | −10 | 10 | | 250* | 5 | 30 | F-49C |
| 2SA 500 | RF | " | −30 | −5 | −100 | 250 | 175 | −0.5 | −15 | 60-200 | −1 | −10 | −10 | 10 | | 250* | 5 | 30 | 49C |
| 2SA 501 | " | Si.EP | −40 | −5 | −200 | 750 | 175 | −1 | −30 | 70 | −1 | −10 | −10 | 10 | | 200* | 10 | 30 | F-84B |
| 2SA 502 | " | " | −90 | −5 | −100 | 300 | 125 | −0.1 | −70 | 40-240 | −1 | −120 | − 10 | 10 | | > 50 | 8 | 50 | F-33 |
| 2SA 503 | RF | Si.E | −60 | −5 | −600 | 800 | 175 | −0.5 | −30 | 30-300 | −2 | −150 | −10 | 10 | | 130* | 18 | 10 | F-84B |
| 2SA 504 | " | " | −40 | −5 | −600 | 800 | 175 | −0.5 | −30 | 30-300 | −2 | −150 | −10 | 10 | | 130* | 18 | 10 | F-84B |
| 2SA 505 | PA | " | −60 | −5 | −800 | 600 | 125 | −1 | −30 | 40-240 | −2 | −50 | −10 | 10 | | 100* | 20 | 10 | F-164 |
| 2SA 506 | RF.Conv.Mix Osc | Ge.EMe | −20 | | −5 | 75 | 85 | −10 | −12 | | | | −6 | 1 | 20 | 300* | 1 | 25 | F-10 |
| 2SA 507 | " | " | −20 | | −5 | 75 | 85 | −10 | −12 | | | | −6 | 1 | 20 | 250* | 1 | 25 | F-10 |
| 2SA 508 | " | " | −20 | | −5 | 75 | 85 | −10 | −12 | | | | −6 | 1 | 8 | 200* | 1 | 25 | F-10 |
| 2SA 509 | RF.PA | Si.E | −35 | −5 | −500 | 600 | 150 | −0.1 | −20 | 70-240 | −2 | −50 | −10 | 10 | | 140* | 22 | 10 | F-131 |
| 2SA 510 | PA | Si.T | −120 | −5 | −1.5A | 800 | 175 | −1 | −30 | 30-150 | −2 | −200 | -10 | 30 | | 60* | 43 | 10 | F-84B |

Pin Configurations are 1. Emitter, 2. Base, 3. Collector, 4. Shield, unless otherwise specified. (Outline Dimensions: mm)

| TYPE NO. | USES | MATERIAL STRUCTURE | $V_{CBO}$ (V) | $V_{EBO}$ (V) | Ic (mA) | Pd (mW) | Tj (°C) | $I_{CBO}$ (uA) | VALUE OF DC/PULSE $V_{CB}$(V) | hFE | $V_{CE}$(V) | Ic(mA) | BIAS $V_{CB}$(V) | Ie(mA) | hfe hfb* | fab fT (Mc) | Cob (pF) | $r_{bb'}$ $h_{ie(real)}$* (Ω) | CASE STYLE |
|---|---|---|---|---|---|---|---|---|---|---|---|---|---|---|---|---|---|---|---|
| 2SA 511 | PA | Si.TP | −90 | −5 | −1A | 800 | 150 | −1 | −30 | | | | −10 | 50 | 50 | 50* | 43 | 10 | F-84B |
| 2SA 512 | " | Si.T | −80 | −5 | −1.5A | 800 | 175 | −1 | −30 | 30-150 | −2 | −200 | −10 | 30 | | 60* | 43 | 10 | F-84B |
| 2SA 513 | " | " | −50 | −5 | −1A | 800 | 150 | −1 | −30 | | | | −10 | 50 | 50 | 50* | 43 | 10 | F-84B |
| 2SA 514 | | | | | | | | | | | | | | | | | | | |
| 2SA 515 | | | | | | | | | | | | | | | | | | | |
| 2SA 516 | RF.PA | Si.DB | −80 | −5 | −1.5A | 800 | 175 | −0.5 | −30 | 60 | −2 | −200 | −5 | 200 | 60 | 50* | 43 | 10 | F-84B |
| 2SA 516A | " | " | −120 | −5 | −1.5A | 800 | 175 | −0.5 | −30 | 60 | −2 | −200 | -5 | 200 | 60 | 50* | 43 | 10 | F-84B |
| 2SA 517 | RF | Ge.D | −18 | −0.5 | −10 | 55 | 85 | −12 | −18 | | | | −6 | 1 | 60 | 60 | 1.8 | 45 | F-12A |
| 2SA 518 | RF.Conv.Mix Osc | " | −18 | −0.5 | −10 | 55 | 85 | −12 | −18 | | | | −6 | 1 | 60 | 45 | 1.8 | 45 | F-12A |
| 2SA 519 | | | | | | | | | | | | | | | | | | | |
| 2SA 520 | | | | | | | | | | | | | | | | | | | |
| 2SA 521 | | | | | | | | | | | | | | | | | | | |
| 2SA 522 | RF | Si.EP | −25 | −5 | −100 | 250 | 175 | −0.1 | −15 | 30-120 | −1 | −10 | -10 | 10 | 50 | 200* | 4 | 25 | F-49C |
| 2SA 522A | " | " | −50 | −5 | −100 | 250 | 175 | −0.1 | −15 | 30-129 | −1 | −10 | 10 | 50 | 200* | 4 | 25 | | F-49C |
| 2SA 523 | RF.PA | " | −40 | −5 | −300 | 650 | 175 | −0.1 | −10 | 30-120 | −10 | −10 | −10 | 10 | 60 | 200* | 4.5 | 50* | F-84B |
| 2SA 523A | " | " | −60 | −5 | −300 | 650 | 175 | −0.1 | −10 | 30-120 | −10 | −10 | −10 | 10 | 60 | 200* | 4.5 | 50* | F-84B |
| 2SA 524 | " | " | −25 | −3 | −100 | 350 | 175 | −0.1 | −10 | | | | −10 | 10 | 50 | 250* | 4.5 | 50* | F-49C |
| 2SA 525 | RF.Conv.Mix Osc | Ge.EMe | −20 | | −5 | 75 | 85 | −10 | −12 | | | | −6 | 1 | 20 | 250* | 1 | 25 | F-48C |
| 2SA 526 | PA | Si.E | −50 | −5 | −1A | 500 | 150 | −5 | −50 | 70 | −2 | −100 | −6 | 1 | 50 | | 18 | $Ccrbb'$ 100pS | F-84C |
| 2SA 527 | " | " | −50 | −5 | −2A | 5W (Tc = 25°C) | 150 | −5 | −50 | 50 | −2 | −200 | −6 | 1 | 50 | | 18 | $Ccrbb'$ 100pS | F-97C |
| 2SA 528 | " | " | −50 | −5 | −2A | 5W (Tc = 25°C) | 150 | −5 | −50 | 70 | −2 | −100 | −6 | 1 | 50 | | 18 | $Ccrbb'$ 100pS | F-97C |
| 2SA 529 | RF.PA | Si.EMe | −50 | −5 | −1A | 5W (Tc = 25°C) | 150 | −5 | −50 | 80 | −2 | −100 | −10 | 50 | | | 18 | $Ccrbb'$ 100pS | F-181 |
| 2SA 530 | SW | Si.EP | −50 | −5 | −100 | 200 | 175 | −1 | −20 | | | | −1 | 10 | 65 | 300* | 5 | | F-49C |
| 2SA 531 | | | | | | | | | | | | | | | | | | | |
| 2SA 532 | RF.PA | Si.TP | −50 | −5 | −200 | 500 | 150 | −10 | −40 | 80 | −6 | | −6 | 10 | | 90* | 7 | $Ccrbb'$ 45pS | F-84B |
| 2SA 533 | | | | | | | | | | | | | | | | | | | |
| 2SA 534 | | | | | | | | | | | | | | | | | | | |
| 2SA 535 | | | −75 | −4 | −700 | 500 | 150 | | | 60 | −6 | −50 | | | | 80* | | | |
| 2SA 536 | | | −50 | −4 | −700 | 500 | 150 | | | 60 | −6 | −50 | | | | 80 | | | |
| 2SA 537 | RF | Si.EP | −60 | −4 | −700 | 750 | 200 | −10 | −30 | | | | −4 | 50 | 50 | 200* | 15 | 30 | F-84A |
| 2SA 537A | RF | Si.EP | −90 | −4 | −700 | 750 | 200 | −10 | −30 | | | | −4 | 50 | 50 | 200* | 15 | 30 | F-84A |
| 2SA 538 | " | Ge.A | −25 | −12 | −50 | 120 | 75 | −50 | −25 | | | | −6 | 1 | 70 | 8 | 10 | 100 | F-12A |
| 2SA 539 | RF.PA | Si.EP | 60 | −5 | −200 | 250 | 125 | −0.2 | −30 | 80 | −10 | −10 | −10 | 10 | 80 | 200* | 8.5 | 20 | F-138 |
| 2SA 540 | | | | | | | | | | | | | | | | | | | |
| 2SA 541 | | | | | | | | | | | | | | | | | | | |
| 2SA 542 | RF.AF | Si.EP | −30 | −5 | −50 | 150 | 150 | −0.05 | −25 | 160 | −10 | −0.5 | −5 | 1 | 180 | 100* | 5 | 20* | F-23 |
| 2SA 543 | RF.LN | " | −30 | −5 | −50 | 150 | 150 | −0.05 | −25 | 160 | −10 | −0.5 | −5 | 1 | 180 | 100* | 5 | 20* | F-23 |
| 2SA 544 | RF | " | −60 | −5 | −200 | 750 | 175 | −0.2 | −45 | | | | −10 | 10 | 100 | 160* | 8 | 30 | F-84A |
| 2SA 545 | RF.PA | " | −70 | | −200 | 400 | 125 | −0.1 | −60 | 70 | −2 | −150 | −10 | 10 | 110 | 200* | 8.5 | 20 | F-44 |
| 2SA 546 | PA | " | −70 | −5 | −1A | 750 | 175 | −3 | −30 | 80 | −3 | −100 | −10 | 50 | | 80* | 50 | 20 | F-84B |
| 2SA 546A | " | " | −90 | −5 | −1A | 750 | 175 | −3 | −30 | 80 | −3 | −100 | −10 | 50 | | 80* | 50 | 20 | F-84B |
| 2SA 547 | " | " | −70 | −5 | −1A | 10W (Tc = 25°C) | 175 | −3 | −30 | 80 | −3 | −100 | −10 | 50 | | 80* | 50 | 20 | F-97B |
| 2SA 547A | " | " | −90 | −5 | −1A | 10W (Tc = 25°C) | 175 | −3 | −30 | 80 | −3 | −100 | −10 | 50 | | 80* | 50 | 20 | F-97B |
| 2SA 548 | RF.SW | " | −50 | −5 | −100 | 200 | 175 | −1 | −20 | 100 | −12 | −1 | −10 | 20 | | 400* | 4 | $Ccrbb'$ 30pS | F-8C |
| 2SA 549 | RF | Si.T | −70 | −5 | −100 | 200 | 175 | −1 | −20 | 80 | −1 | −10 | −10 | 10 | | 200* | 2.5 | 80* | F-182C |
| 2SA 550 | RF.AF | " | −25 | −5 | −100 | 300 | 175 | −1 | −10 | 250 | −5 | −2 | −5 | 2 | 150 | 120* | 5 | 100 | F-49C |
| 2SA 550A | " | " | −45 | −5 | −100 | 300 | 175 | −1 | −10 | 250 | −5 | −2 | −5 | 2 | 150 | 120* | 5 | 100 | F-49C |
| 2SA 551 | | | | | | | | | | | | | | | | | | | |
| 2SA 552 | RF.SW | Si.EP | −60 | −5 | −200 | 750 | 175 | −0.1 | −45 | 100 | −10 | −10 | −10 | 10 | 100 | 150* | 8 | 10* | F-84C |
| 2SA 553 | RF | " | −40 | −3 | −300 | 250 | 175 | −0.1 | −10 | | | | −10 | 10 | 60 | 200* | 4.5 | 50* | F-49C |
| 2SA 554 | " | " | −25 | −3 | −300 | 250 | 175 | −1 | −10 | | | | −10 | 10 | 60 | 200* | 4.5 | 50* | F-49C |
| 2SA 555 | " | " | −50 | −5 | −200 | 200 | 125 | −1 | −10 | 80 | −1 | −10 | −6 | 2 | | 100* | 55 | 40* | F-138 |
| 2SA 556 | " | " | −20 | | −200 | 200 | 125 | −1 | −10 | | | | −10 | 10 | 60 | 200* | 5 | 50* | F-30 |
| 2SA 557 | " | " | −20 | | −250 | 300 | 125 | −1 | −10 | | | | −10 | 10 | 60 | 200* | 5 | 50* | F-32 |
| 2SA 558 | SW | " | −40 | −5 | −200 | 350 | 175 | −0.1 | −10 | 50 | −1 | −10 | | | | 200* | 4.5 | 50* | F-49C |
| 2SA 559 | " | " | −20 | −5 | −200 | 350 | 175 | −0.5 | −10 | 50 | −1 | −10 | | | | 200* | 4.5 | 50* | F-49C |
| 2SA 560 | RF | Si.TP | −80 | −5 | −800 | 800 | 175 | −0.5 | −30 | 30-120 | −2 | −150 | −10 | 50 | 70 | 150* | 11 | 15 | F-84B |
| 2SA 561 | " | Si.E | −50 | −5 | −150 | 300 | 125 | −0.1 | −18 | 70-400 | −1 | −20 | −6 | 1 | | 70* | 13 | 10 | F-33 |
| 2SA 562 | " | " | −30 | −5 | −400 | 300 | 125 | −0.1 | −18 | 70-400 | −1 | −100 | −6 | 2 | | | 13 | 10 | F-33 |
| 2SA 563 | | | | | | | | | | | | | | | | | | | |

**Pin Configurations are 1. Emitter, 2. Base, 3. Collector, 4. Shield, unless otherwise specified. (Outline Dimensions: mm)**

| TYPE NO. | USES | MATERIAL STRUCTURE | $V_{CBO}$ (V) | $V_{EBO}$ (V) | $I_C$ (mA) | $P_d$ (mW) | $T_j$ (°C) | $I_{CBO}$ (uA) | VALUE OF DC/PULSE | | | BIAS | | hfe hfb* | fab fT (Mc) | Cob (pF) | $r_{bb'}$ $h_{ie(real)}$* (Ω) | CASE STYLE |
|---|---|---|---|---|---|---|---|---|---|---|---|---|---|---|---|---|---|---|
| | | | | | | | | | $V_{CB}$(V) | hFE | $V_{CE}$(V) | $I_C$(mA) | $V_{CB}$(V) | $I_e$(mA) | | | | |
| 2SA 564 | RF.AF | Si.EP | −25 | −5 | −100 | 250 | 125 | −1 | −10 | 250 | −5 | −2 | −10 | 1 | | 80* | 2.7 | 100 | F-42 |
| 2SA 564A | " | " | −45 | −5 | −100 | 250 | 125 | −1 | −10 | 250 | −5 | −2 | −10 | 1 | | 80* | 2.7 | 100 | F-42 |
| 2SA 565 | RF | " | −50 | −4 | −500 | 300 | 175 | −0.5 | −20 | 80 | −3 | −10 | −6 | 1 | | 60* | 5 | 30* | F-12C |
| 2SA 566 | PA | " | −100 | −4 | −700 | 10W (Tc = 25°C)* | 175 | −10 | −30 | 35-200 | −4 | −50 | −6 | 30 | | 100* | 30 | 20* | F-99 |
| 2SA 567 | RF | " | −30 | −4 | −100 | 200 | 175 | −0.5 | −15 | 400 | −6 | −0.1 | −6 | 1 | 300 | 70* | 5 | 25* | F-12A |
| 2SA 568 | PA | " | −35 | −4 | −250 | 200 | 125 | −1 | −25 | 100 | −2 | −150 | −6 | 10 | | 150* | 10 | $C_{rbb'}$ 100ps | F-41 |
| 2SA 569 | PA | " | −50 | −4 | −250 | 200 | 125 | −1 | −25 | 100 | −2 | −150 | −6 | 10 | | 150* | 10 | $C_{rbb'}$ 100ps | F-41 |
| 2SA 570 | " | " | −65 | −4 | −250 | 200 | 125 | −1 | −25 | 80 | −2 | −150 | −6 | 10 | | 150* | 10 | $C_{rbb'}$ 100ps | F-41 |
| 2SA 571 | SW | " | −60 | −5 | −1A | 800 | 175 | −0.1 | −45 | 80 | −10 | −50 | −10 | 50 | | 300* | 16 | 30 | F-84C |
| 2SA 572 | | | | | | | | | | | | | | | | | | | |
| 2SA 573 | RF.AF | Si.EP | −30 | | −100 | 300 | 125 | −0.1 | −20 | 100 | −6 | −1 | −6 | 1 | | 130* | 4 | $C_{rbb'}$ 50pS | F-138 |
| 2SA 574 | RF | " | −60 | | −100 | 300 | 125 | −0.1 | −20 | 130 | −1 | −50 | −10 | 2 | | 150* | 4 | $C_{rbb'}$ 50pS | F-138 |
| 2SA 575 | " | " | −90 | | −100 | 300 | 125 | −0.1 | −20 | 100 | −1 | −50 | −10 | 2 | | 150* | 4 | $C_{rbb'}$ 50pS | F-138 |
| 2SA 576 | RF.PA | " | −30 | | −200 | 600 | 125 | −0.5 | −20 | 80 | −1 | −100 | −10 | 5 | | 200* | 5 | $C_{rbb'}$ 50pS | F-31 |
| 2SA 577 | " | " | −60 | | −400 | 600 | 125 | −0.5 | −20 | 100 | −1 | −100 | −10 | 5 | | 200* | 5 | $C_{rbb'}$ 50pS | F-31 |
| 2SA 578 | RF.AF.LN | " | −50 | −5 | −30 | 300 | 150 | −0.05 | −30 | 370 | −3 | −1 | −3 | 1 | | 120* | 7 | 20* | F-49C |
| 2SA 579 | RF.AF | " | −50 | −5 | −30 | 300 | 150 | −0.05 | −30 | 370 | −3 | −1 | −3 | 1 | | 120* | 7 | 20* | F-49C |
| 2SA 580 | RF.AF.PA | " | −60 | −6 | −600 | 800 | 175 | −1 | −30 | 120 | −2 | −200 | −6 | 1 | | 100* | 18 | 20* | F-84B |
| 2SA 581 | " | " | −100 | −6 | −600 | 800 | 175 | −1 | −30 | 120 | −2 | −200 | −6 | 1 | | 100* | 18 | 20* | F-84B |
| 2SA 582 | | | | | | | | | | | | | | | | | | | |
| 2SA 583 | | | | | | | | | | | | | | | | | | | |
| 2SA 584 | | | | | | | | | | | | | | | | | | | |
| 2SA 585 | | | | | | | | | | | | | | | | | | | |
| 2SA 586 | | | | | | | | | | | | | | | | | | | |
| 2SA 587 | | | | | | | | | | | | | | | | | | | |
| 2SA 588 | | | | | | | | | | | | | | | | | | | |
| 2SA 589 | | | | | | | | | | | | | | | | | | | |
| 2SA 590 | | | | | | | | | | | | | | | | | | | |
| 2SA 591 | | | | | | | | | | | | | | | | | | | |
| 2SA 592 | | | | | | | | | | | | | | | | | | | |
| 2SA 593 | | | | | | | | | | | | | | | | | | | |
| 2SA 594 | RF | Si.E | −60 | −5 | −200 | 750 | 175 | −0.1 | −30 | 40-240 | −1 | −10 | −10 | 10 | | 400* | 3 | < 128* | F-84B |
| 2SA 595 | | | | | | | | | | | | | | | | | | | |
| 2SA 596 | | | | | | | | | | | | | | | | | | | |
| 2SA 597 | RF.PA | Si.EP | −50 | −4 | −1A | 6W (Tc = 25°C) | 175 | −1 | −30 | 50 | −3 | −150 | −10 | 100 | | 400* | 10 | 10* | F-84B |
| 2SA 598 | | | | | | | | | | | | | | | | | | | |
| 2SA 599 | | | | | | | | | | | | | | | | | | | |
| 2SA 600 | | | | | | | | | | | | | | | | | | | |
| 2SA 601 | | | | | | | | | | | | | | | | | | | |
| 2SA 602 | | | | | | | | | | | | | | | | | | | |
| 2SA 603 | RF | Si.EP | −60 | −8 | −200 | 300 | 150 | −0.5 | −40 | 150 | −1 | −10 | −10 | 10 | | 220* | 6.5 | 70 | F-124 |
| 2SA 604 | " | " | −120 | −5 | −30 | 300 | 150 | −0.5 | −100 | 80 | −3 | −1 | −10 | 10 | | 170* | 3 | 20 | F-49C |
| 2SA 605 | RF.SW | " | −180 | −5 | −50 | 300 | 150 | −1 | −100 | 100 | −6 | −15 | −10 | 10 | | 100* | 4 | 40 | F-49C |
| 2SA 606 | PA | " | −100 | −5 | −700 | 0.7 | 150 | −3 | −80 | 100 | −5 | −200 | −5 | 150 | | 115* | 20 | 45* | F-84B |
| 2SA 607 | " | " | −100 | −5 | −700 | 1W | 150 | −3 | −80 | 80 | −5 | −300 | −10 | 100 | | 100* | 30 | 45* | F-97B |
| 2SA 608 | RF.AF.SW | " | −30 | −5 | −100 | 100 | 125 | −1 | −25 | 150 | −1 | −10 | −6 | 10 | | 180* | 7 | $C_{rbb'}$ 100pS | F-166 |
| 2SA 609 | RF.AF | " | −30 | −5 | -100 | 100 | 125 | −1 | −25 | 85 | −6 | −1 | −6 | 1 | | 80* | 7 | $C_{rbb'}$ 100pS | F-166 |
| 2SA 610 | " | " | −30 | −5 | −100 | 150 | 125 | −1 | −20 | 100 | −6 | −1 | −6 | | | 170* | 3.3 | $C_{rbb'}$ 50pS | F-194 |
| 2SA 611 | " | " | −60 | −5 | −100 | 150 | 125 | −1 | −20 | 100 | −6 | −1 | −6 | 1 | | 170* | 3.3 | $C_{rbb'}$ 50pS | F-194 |
| 2SA 612 | RF.SW | " | −90 | −5 | −50 | 150 | 125 | −0.1 | −20 | 100 | −6 | −1 | −10 | 2 | | 100* | 4 | $C_{rbb'}$ 50pS | F-29 |
| 2SA 613 | PA | " | −60 | −7 | −1A | 15W (Tc = 25°C) | 150 | −1mA | −40 | 80 | −5 | −500 | −10 | 200 | | 30* | 60 | 140* | F-134 |
| 2SA 614 | " | " | −80 | −7 | −1A | 15W (Tc = 25°C) | 150 | −1mA | −6 | 80 | −5 | −500 | −10 | 200 | | 30* | 60 | 140* | F-134 |
| 2SA 615 | | | | | | | | | | | | | | | | | | | |
| 2SA 616 | PA | SI.EMe | −80 | −5 | −3A | 25W (Tc = 25°C) | 150 | −1mA | −60 | 70 | −5 | −1A | −10 | 200 | | 15* | 100 | 60* | F-134 |
| 2SA 617 | RF | SI.T | −150 | −5 | −50 | 200 | 175 | −1 | −100 | 80 | −3 | −15 | −10 | 10 | | 60* | 3.5 | $C_{rbb'}$ 40pS | F-244 |
| 2SA 618 | " | " | −180 | −5 | −50 | 200 | 175 | −1 | −150 | 80 | −3 | −15 | −10 | 10 | | 60* | 3.5 | $C_{rbb'}$ 40pS | F-244 |
| 2SA 619 | | | | | | | | | | | | | | | | | | | |
| 2Sa 620 | RF.AF.LN | Si.EP | −30 | −5 | −50 | 200 | 175 | −50nA | −20 | 250 | −6 | −1 | −6 | 0.3 | | 120* | 4.5 | $C_{rbb'}$ 55pS | F-169 |
| 2SA 621 | RF.AF | " | −60 | | −200 | 400 | 175 | −0.5 | −20 | 80 | −1 | −50 | −6 | 1 | | 200* | 6 | $C_{rbb'}$ 50pS | F-84B |
| 2SA 622 | SW | SI.EP | −30 | −10 | −300 | 150 | 125 | −0.1 | −20 | 40,000 | −6 | −100 | | | | | | | F-194 |

**Pin Configurations are 1. Emitter, 2. Base, 3. Collector, 4. Shield, unless otherwise specified. (Outline Dimensions: mm)**

| TYPE NO. | USES | MATERIAL STRUCTURE | $V_{CBO}$ (V) | $V_{EBO}$ (V) | $I_C$ (mA) | $P_d$ (mW) | $T_j$ (°C) | $I_{CBO}$ (uA) | VALUE OF DC/PULSE | | | BIAS | | hfe hfb* | $f_{ab}$ $f_T$ (Mc) | Cob (pF) | $r_{bb'}$ $h_{ie(real)}$* (Ω) | CASE STYLE |
|---|---|---|---|---|---|---|---|---|---|---|---|---|---|---|---|---|---|---|
| | | | | | | | | $V_{CB}$(V) | hFE | $V_{CE}$(V) | $I_C$(mA) | $V_{CB}$(V) | $I_e$(mA) | | | | | |
| 2SA 623 | SW.PA | Si.EP | −35 | −5 | −1.5A | 7W (Tc = 25°C) | 150 | −1 | −25 | 100 | −4 | −500 | | | | | | F-132 |
| 2SA 624 | " | " | −50 | −5 | −1.5A | 7W (Tc = 25°C) | 150 | −1 | −25 | 100 | −4 | −500 | | | | | | F-132 |
| 2SA 625 | RF | " | −100 | −6 | −500 | 700 | 175 | −1 | −30 | 120 | −2 | −200 | −10 | 10 | | 100* | 18 | 20 | F-84B |
| 2SA 626 | PA | Si.EMe | −80 | −5 | −5A | 60W (Tc = 25°C) | 150 | −2mA | −60 | 50 | −5 | −2A | −10 | 200 | | 15* | 140 | 60* | F-102 |
| 2SA 627 | " | " | −100 | −5 | −5A | 60W (Tc = 25°C) | 150 | −2mA | −80 | 50 | −5 | −2A | −10 | 200 | | 15* | 140 | 60* | F-102 |
| 2SA 628 | RF.AF.SW | Si.EP | −30 | −5 | −100 | 150 | 125 | −0.1 | −25 | 200 | −6 | −1 | −6 | 1 | | 100* | 3.5 | $C_{rbb'}$ 60pS | F-138B |
| 2SA 629 | RF.AF.LN | " | −30 | −5 | −30 | 150 | 125 | −0.1 | −25 | 200 | −6 | −1 | −6 | 1 | | 100* | 3.5 | $C_{rbb'}$ 60pS | F-138B |
| 2SA 630 | | | | | | | | | | | | | | | | | | | |
| 2SA 631 | | | | | | | | | | | | | | | | | | | |
| 2SA 632 | | | | | | | | | | | | | | | | | | | |
| 2SA 633 | PA | Si.E | −30 | −5 | −2A | 10W (Tc = 25°C) | 150 | −10 | −30 | 80 | −5 | −1A | −5 | 150 | | 60* | 60 | 10* | F-167 |
| 2SA 634 | " | " | −40 | −5 | −2A | 10W (Tc = 25°C) | 150 | −100 | −30 | 80 | −5 | −1A | −5 | 150 | | 60* | | | F-167 |
| 2SA 628 | RF.AF.SW | Si.EP | −30 | −5 | −100 | 150 | 125 | −0.1 | −25 | 200 | −6 | −1 | −6 | 1 | | 100* | 3.5 | | F-138B |
| 2SA 635 | PA | " | −60 | −5 | −1A | 10W (Tc = 25°C) | 150 | −10 | −40 | 80 | −5 | −500 | −5 | 150 | | 50* | 60 | 10* | F-167 |
| 2SA 636 | " | " | −90 | −5 | −1A | 10W (Tc = 25°C) | 150 | −100 | −40 | 80 | −5 | −500 | −5 | 150 | | 40* | | | F-167 |
| 2SA 637 | RF.AF | Si.TP | −150 | −5 | −50 | 300 | 175 | −1 | −100 | 150 | −3 | −15 | −10 | 3 | 67 | 150* | 4 | $C_{rbb'}$ 150pS | F-49C |
| 2SA 638 | " | Si.E | −150 | −5 | −50 | 250 | 125 | −1 | −100 | 100 | −6 | −15 | −3 | 1 | | 100* | 4 | 40 | F-138 |
| 2SA 639 | " | " | −180 | −5 | −50 | 250 | 125 | −1 | −100 | 100 | −6 | −15 | −3 | 1 | | 100* | 4 | 40 | F-138 |
| 2SA 640 | RF.LN | " | −50 | −5 | −30 | 250 | 125 | −0.1 | −40 | 300 | −3 | −0.5 | −3 | 1 | | 100* | 8 | 20* | F-138 |
| 2SA 641 | RF.AF | " | −50 | −5 | −30 | 250 | 125 | −0.1 | −40 | 300 | −3 | −0.5 | −3 | 1 | | 100* | 8 | 20* | F-138 |
| 2SA 642 | RF.PA | " | −30 | −5 | −300 | 250 | 125 | −0.1 | −15 | 120 | −1 | −50 | −3 | 50 | | 200* | 15 | 12 | F-138 |
| 2SA 643 | " | " | −40 | −5 | −500 | 500 | 125 | −0.2 | −25 | 120 | −1 | −100 | −6 | 50 | | 180* | 24 | 10 | F-44 |
| 2SA 644 | | | | | | | | | | | | | | | | | | | |
| 2SA 645 | PA.SW | Si.EP | −70 | −5 | −800 | 7W (Tc = 25°C) | 150 | −10 | −25 | 100 | −4 | −300 | | | | | | | F-132 |
| 2SA 646 | " | " | −90 | −5 | −800 | 7W (Tc = 25°C) | 150 | −10 | −25 | 100 | −4 | −300 | | | | | | | F-132 |
| 2SA 647 | " | " | −110 | −5 | −800 | 7W (Tc = 25°C) | 150 | −10 | −25 | 100 | −4 | −300 | | | | | | | F-132 |
| 2SA 648 | PA | Si.EMe | −120 | −5 | −7A | 60W (Tc = 25°C) | 150 | −2mA | −80 | 50 | −5 | −3A | −10 | 200 | | 10* | 200 | 30* | F-102 |
| 2SA 649 | " | " | −150 | −5 | −7A | 80W (Tc = 25°C) | 150 | −2mA | −80 | 50 | −5 | −3A | −10 | 200 | | 10* | 200 | 30* | F-102 |
| 2SA 650 | " | " | −150 | −5 | −10A | 100W (Tc = 25°C) | 150 | −1mA | −80 | 70 | −5 | −2A | −10 | 200 | | 10* | 500 | 20* | F-102 |
| 2SA 651 | " | " | −150 | −5 | −10A | 100W (Tc = 25°C) | 150 | −1mA | −100 | 70 | −5 | −2A | −10 | 200 | | 10* | 500 | 20* | F-102 |
| 2SA 652 | " | " | −150 | −6 | −1A | 15W (Tc = 25°C) | 150 | −1mA | −60 | 80 | −5 | −200 | −10 | 200 | | 15* | 100 | 30* | F-134 |
| 2SA 653 | PA | Si.EMe | −150 | −6 | −1A | 15W (Tc = 25°C) | 150 | −1mA | −60 | 80 | −5 | −200 | −10 | 200 | | 15* | 100 | 30* | F-134 |
| 2SA 654 | | | | | | | | | | | | | | | | | | | |
| 2SA 655 | | | | | | | | | | | | | | | | | | | |
| 2SA 656 | PA | Si.EMe | −130 | −5 | −7A | 50W (Tc = 25°C) | 150 | −100 | 100-300 | 60 | −5 | −1A | 10 | 1A | | 5* | 250 | 20 | 102 |
| 2SA 657 | " | " | −100 | −5 | −7A | 50W (Tc = 25°C) | 150 | −100 | 100-300 | 60 | −5 | −1A | −10 | 1A | | 5* | 250 | 20 | F-102 |
| 2SA 658 | " | " | −70 | −5 | −7A | 50W (Tc = 25°C) | 150 | −100 | 100-300 | 60 | −5 | −1A | −10 | 1A | | 5* | 250 | 20 | F-102 |
| 2Sa 659 | RF | Si.P | −50 | −5 | −200 | 400 | 125 | −10 | −40 | 100 | −6 | −50 | −6 | 10 | | 90* | 7 | | F-138B |
| 2SA 600 | | | | | | | | | | | | | | | | | | | |
| 2SA 661 | RF.AF.PA | Si.E | −70 | −5 | −200 | 600 | 150 | −0.1 | −20 | 40-400 | −2 | −50 | −10 | 10 | | 100* | 9 | 10 | F-131 |
| 2SA 662 | | | | | | | | | | | | | | | | | | | |
| 2SA 663 | RF.AF.PA | Si.EP | −100 | −5 | −7A | 60W (Tc = 25°C) | 150 | −1mA | −50 | 30-200 | −5 | −1A | −5 | 1A | | 6* | 600 | 15 | F-102 |
| 2SA 664 | | | | | | | | | | | | | | | | | | | |
| 2SA 665 | | | | | | | | | | | | | | | | | | | |
| 2SA 666 | RF.AF.LN | Si.EP | −25 | −5 | −50 | 150 | 125 | −1 | .10 | 250 | −5 | −2 | −5 | 2 | 200 | 130* | 2.8 | $C_{rbb'}$ 160pS | F-138 |
| 2SA 667 | | | | | | | | | | | | | | | | | | | |
| 2SA 668 | RF.SW | Si.EP | −100 | −5 | −100 | 150 | 125 | −0.1 | −25 | 100 | −6 | −1 | −6 | 1 | | 100* | 3.5 | $C_{rbb'}$ 100pS | F-138B |
| 2SA 669 | SW | " | −160 | −5 | −100 | 150 | 125 | −0.1 | −25 | 70 | −6 | −1 | | | | | | | F-138B |
| 2SA 670 | PA | Si.T | −50 | −4 | −3A | 25W (Tc = 25°C) | 150 | −100 | −20 | 100 | −4 | −1A | −4 | 500 | | 11* | 200 | 6* | F-158 |
| 2SA 671 | " | " | −50 | −4 | −3A | 25W (Tc = 25°C) | 150 | −100 | −20 | 100 | −4 | −1A | −4 | 500 | | 11* | 200 | 6* | F-159 |
| 2SA 672 | RF.LN | Si.EP | −50 | −4 | −200 | 200 | 125 | −0.5 | −18 | 110 | −12 | −2 | −12 | 2 | | | | | F-170 |
| 2SA 673 | RF | Si.EP | −35 | −4 | −500 | 400 | 125 | −0.5 | −20 | 130 | −3 | −10 | −6 | 1 | 50* | 7 | 12* | | F-170 |
| 2SA 674 | | | | | | | | | | | | | | | | | | | |
| 2SA 675 | AF.RF | Si.E | −80 | −5 | −100 | 250 | 125 | −1 | −60 | 120 | −3 | −20 | −3 | 1 | | 100* | 5 | 30 | F-138 |
| 2SA 676 | | | | | | | | | | | | | | | | | | | |
| 2SA 677 | RF.SW | Si.E | −25 | −5 | −200 | 250 | 100 | −0.5 | −25 | 250 | −3 | −1 | −6 | 2 | | 140* | 6 | 60pS | F-168 |
| 2SA 678 | " | " | −50 | −5 | −200 | 320 | 120 | −0.5 | −25 | 250 | −3 | −1 | −6 | 2 | | 140* | 6 | 60pS | F-168 |
| 2SA 679 | PA | Si.EMe | −120 | | −12A | 100W (Tc = 25°C) | 150 | −100 | −50 | 40-140 | −5 | −2A | −5 | 2A | | 6* | 900 | 20 | F-102 |
| 2SA 680 | " | " | −80 | | −12A | 100W (Tc = 25°C) | 150 | −100 | −50 | 40-140 | −5 | −2A | −5 | 2A | | 6* | 900 | 20 | F-102 |
| 2SA 681 | RF.PA | Si.EP | −100 | −5 | −1A | 800 | 150 | −1 | −30 | 120 | −2 | −150 | −2 | 150 | | 50* | 40 | 10 | F-164 |
| 2SA 682 | " | Si.E | −80 | −5 | −750 | 800 | 150 | −0.5 | −30 | 70-240 | −2 | −150 | −2 | 150 | | 100* | 15 | 15 | F-164 |

**Pin Configurations are 1. Emitter, 2. Base, 3. Collector, 4. Shield, unless otherwise specified. (Outline Dimensions: mm)**

| TYPE NO. | USES | MATERIAL STRUCTURE | $V_{CBO}$ (V) | $V_{EBO}$ (V) | $I_C$ (mA) | $P_d$ (mW) | $T_j$ (°C) | $I_{CBO}$ (uA) | VALUE OF DC/PULSE | | | BIAS | | hfe hfb* | fab fT (Mc) | Cob (pF) | $r_{bb'}$ $h_{ie(real)}$* (Ω) | CASE STYLE |
|---|---|---|---|---|---|---|---|---|---|---|---|---|---|---|---|---|---|---|
| | | | | | | | | | $V_{CB}$(V) | hFE | $V_{CE}$(V) | $I_C$(mA) | $V_{CB}$(V) | $I_e$(mA) | | | | | |
| 2SA 683 | PA | Si.EP | −30 | −5 | −1A | 750 | 135 | −0.1 | −20 | 160 | −10 | −500 | −10 | 50 | | 200* | 20 | 3.5* | F-165 |
| 2SA 684 | " | " | −60 | −5 | −1A | 750 | 135 | −0.1 | −20 | 160 | −10 | −500 | −10 | 50 | | 200* | 20 | 3.5* | F-165 |
| 2SA 685 | AF | Si.TP | −150 | −5 | −50 | 300 | 125 | −1 | −100 | 150 | −3 | −15 | −10 | 3 | 67 | 100* | 5 | 35 | F-138 |
| 2SA 686 | | | | | | | | | | | | | | | | | | | |
| 2SA 687 | | | | | | | | | | | | | | | | | | | |
| 2SA 688 | | | | | | | | | | | | | | | | | | | |
| 2SA 689 | | | | | | | | | | | | | | | | | | | |
| 2SA 690 | | | | | | | | | | | | | | | | | | | |
| 2SA 691 | | | | | | | | | | | | | | | | | | | |
| 2SA 692 | | | | | | | | | | | | | | | | | | | |
| 2SA 693 | | | | | | | | | | | | | | | | | | | |
| 2SA 694 | | | | | | | | | | | | | | | | | | | |
| 2SA 695 | RF.PA | Si.EP | −25 | −4 | −700 | 500 | 125 | −1 | −25 | 100 | −1 | −500 | −6 | 10 | | 150* | 20 | $C_{crbb'}$ 100pS | F-138B |
| 2SA 696 | " | " | −45 | −4 | −500 | 500 | 125 | −1 | −25 | 100 | −2 | −150 | −6 | 10 | | 150* | 10 | $C_{crbb'}$ 100pS | F-138B |
| 2SA 697 | " | " | −65 | −4 | −500 | 500 | 125 | −1 | −25 | 100 | −2 | −150 | −6 | 10 | | 150* | 10 | $C_{crbb'}$ 100pS | F-138B |
| 2SA 698 | PA.SW | " | −130 | −5 | −800 | 7W (Tc = 25°C) | 150 | −10 | −25 | 100 | −4 | −300 | | | | | | | F-132 |
| 2SA 699 | PA | " | −40 | −5 | −2A | 10W (Tc = 25°C) | 150 | −1 | −20 | 120 | −5 | −1A | −5 | 500 | | 150* | 50 | 3.3* | F-161 |
| 2SA 700 | " | Si.E | −35 | | −1.5A | 8W (Tc = 25°C) | 150 | −10 | −35 | 100 | −2 | −200 | −4 | 500 | | 11* | 200 | 6* | F-159 |
| 2SA 701 | RF.LN | Si.EP | −30 | −5 | −50 | 100 | 125 | −1 | −25 | 200 | −6 | −1 | −6 | 1 | | 80* | 12 | $C_{crbb'}$ 100pS | F-166 |
| 2SA 702 | " | " | −50 | −5 | −50 | 100 | 125 | −1 | −45 | 200 | −6 | −1 | −6 | 1 | | 80* | 12 | $C_{crbb'}$ 100pS | F-166 |
| 2SA 703 | SW.PA | " | −25 | −5 | −1.5A | 7W (Tc = 25°C) | 150 | −1 | −16 | 100 | −4 | −500 | | | | | | | F-132 |
| 2SA 704 | RF.AF.LN SW | Si.EMe | −25 | −5 | −200 | 250 | 100 | −0.5 | −25 | 250 | −3 | −1 | −6 | 1 | | | | $C_{crbb'}$ 60pS | F-168 |
| 2SA 705 | " | Si.E | −50 | −5 | −200 | 320 | 120 | −0.5 | −25 | 250 | −3 | −1 | −6 | 1 | | 140* | 6 | $C_{crbb'}$ 60pS | F-168 |
| 2Sa 706 | RF | Si.DB | −60 | −6 | −1A | 950 | 120 | −1 | −50 | 150 | −2 | −100 | −10 | 10 | | 120* | 10 | $C_{crbb'}$ 150pS | F-174 |
| 2SA 707 | RF.PA | | −40 | −5 | −500 | 750 | 135 | −0.2 | −25 | 120 | −1 | −100 | −3 | 50 | | 180* | 24 | 10 | F-177 |
| 2SA 708 | RF | " | −80 | −8 | −700 | 800 | 150 | −0.1 | −60 | 150 | −2 | −50 | −10 | 50 | | 50* | 25 | 25* | F-84B |
| 2SA 709 | RF.SW | " | −60 | −8 | −200 | 300 | 150 | −0.1 | −40 | 160 | −1 | −10 | −10 | 10 | | 280* | 7.5 | | F-304 |
| 2SA 710 | RF.SW | Si.E | −50 | −5 | −100 | 300 | 150 | −0.1 | −30 | 120 | −1 | −10 | −10 | 10 | | 600* | 2.5 | 34* | F-49C |
| 2SA 711 | " | " | −50 | −5 | −100 | 300 | 150 | −0.1 | −30 | 120 | −1 | −10 | −10 | 10 | | 1000* | 2.5 | 34* | F-49C |
| 2SA 712 | " | " | −150 | −5 | −500 | 750 | 175 | −0.1 | −100 | 110 | −10 | −50 | −10 | 50 | | 350* | 5.5 | 11* | F-84B |
| 2Sa 713 | RF | Si.E | −15 | −10 | −300 | 250 | 125 | −0.1 | −10 | 20,000 | −5 | −100 | −10 | 10 | | 180* | 6 | 200* | F-138 |
| 2SA 714 | PA | Si.E.Me | −150 | −6 | −7A | 60W (Tc = 25°C) | 150 | −1mA | −30 | 60 | −5 | −1A | −5 | 1A | | 8* | 500 | 20 | F-20 |
| 2SA 715 | RF.PA | Si.EP | −35 | −5 | −1.5A | 10W (Tc = 25°C) | 150 | −20 | −35 | 130 | −2 | −500 | −2 | 200 | | 160* | 35 | 9* | F-160 |
| 2SA 716 | | | | | | | | | | | | | | | | | | | |
| 2SA 717 | RF.SW | Si.EP | −60 | −5 | −1A | 800 | 175 | −0.1 | −40 | 80 | −10 | −50 | −10 | 50 | | 260* | 18 | 10* | F-84B |
| 2SA 718 | " | " | −60 | −8 | −200 | 300 | 150 | −0.1 | −40 | 140 | −1 | −10 | −10 | 10 | | 220* | 6 | 30* | F-49C |
| 2SA 719 | PA | " | −60 | −5 | −500 | 400 | 125 | −0.1 | −20 | 160 | −10 | −150 | −10 | 50 | | 200* | 6 | 3.5* | F-138 |
| 2SA 720 | " | " | −50 | −5 | −500 | 400 | 125 | −0.1 | −20 | 160 | −10 | −150 | −10 | 50 | | 200* | 6 | 3.5* | F-138 |
| 2SA 721 | RF.LN | " | −35 | −5 | −50 | 150 | 125 | −0.1 | −10 | 540 | −5 | −2 | −5 | 2 | | 250* | 5 | 100 | F-138 |
| 2SA 722 | " | " | −55 | −5 | −50 | 150 | 125 | −0.1 | −10 | 540 | −5 | −2 | −5 | 2 | | 250* | 5 | 100 | F-138 |
| 2SA 723 | RF.PA | Si.E | −40 | −5 | −500 | 250 | 125 | −0.2 | −25 | 120 | −1 | −100 | −3 | 50 | | 180* | 24 | 10 | F-138 |
| 2SA 724 | RF | " | −35 | −5 | −50 | 250 | 125 | −0.1 | −25 | 150 | −10 | −0.5 | −1 | 10 | | 300* | 3.5 | 20* | F-138 |
| 2SA 725 | RF.AF.LN | Si.EP | −35 | −5 | −100 | 150 | 125 | −0.1 | −25 | 500 | −6 | −1 | −6 | 1 | | 100* | 3 | | F-138B |
| 2SA 726 | " | " | −50 | −5 | −100 | 150 | 125 | −0.1 | −50 | 500 | −6 | −1 | −6 | 1 | | 100* | 3 | | F-138B |
| 2SA 727 | | | | | | | | | | | | | | | | | | | |
| 2SA 728 | RF.AF | Si.EP | −30 | −5 | −100 | 100 | 125 | −0.1 | −25 | 200 | −6 | −10 | −6 | 1 | | 100* | 3.5 | | F-175 |
| 2SA 729 | | | | | | | | | | | | | | | | | | | |
| 2SA 730 | PA | Si.EP | −30 | −5 | −500 | 600 | 125 | −0.1 | −20 | 160 | −10 | −150 | −10 | 50 | | 200* | 6 | 3.5* | F-171 |
| 2SA 731 | " | " | −60 | −5 | −500 | 600 | 125 | −0.1 | −20 | 160 | −10 | −150 | −10 | 50 | | 200* | 6 | 3.5* | F-171 |
| 2SA 732 | RF | " | −40 | −4 | −300 | 650 | 175 | −0.1 | −10 | 60 | −10 | −10 | −10 | 10 | | 200* | 4.5 | 50* | F-84B |
| 2SA 733 | RF.AF | Si.E | −50 | −5 | −100 | 250 | 125 | −0.1 | −40 | 200 | −6 | −1 | −6 | 1 | | 180* | 8 | 12 | F-138 |
| 2SA 734 | | | | | | | | | | | | | | | | | | | |
| 2SA 735 | | | | | | | | | | | | | | | | | | | |
| 2SA 736 | | | | | | | | | | | | | | | | | | | |
| 2SA 737 | | | | | | | | | | | | | | | | | | | |
| 2SA 738 | RF.PA | SI.E | −25 | −5 | −1.5A | 8W (Tc = 25°C) | 150 | −20 | −25 | 130 | −2 | −500 | −2 | 200 | | 160* | 35 | 9* | F-160 |
| 2SA 739 | SW | Si.TMe | −400 | −5 | −3A | 50W (Tc = 25°C) | 150 | −100 | −300 | 20-300 | −5 | −500 | −50 | | | | 100 | | F-102 |
| 2Sa 740 | RF.PA | " | −150 | −5 | −1.5A | 25W (Tc = 25°C) | 150 | −20 | −100 | 75 | −10 | −500 | −10 | 500 | | 8* | 100 | 25 | F-119 |
| 2SA 741 | SW | Si.EP | −20 | −4 | −100 | 360 | 175 | −0.2 | −16 | 70 | −0.5 | −30 | −10 | 10 | | 350* | | | F-49C |
| 2SA 742 | " | " | −55 | −5 | −500 | 700 | 175 | −0.5 | −20 | 130 | −1.6 | −100 | | | | | | | F-84B |

Pin Configurations are 1. Emitter, 2. Base, 3. Collector, 4. Shield, unless otherwise specified. (Outline Dimensions: mm)

| TYPE NO. | USES | MATERIAL STRUCTURE | $V_{CBO}$ (V) | $V_{EBO}$ (V) | Ic (mA) | Pd (mW) | Tj (°C) | $I_{CBO}$ (uA) | VALUE OF DC/PULSE | | | | BIAS | | hfe hfb* | fab fT (Mc) | Cob (pF) | $r_{bb'}$ $h_{ie(real)}$* (Ω) | CASE STYLE |
|---|---|---|---|---|---|---|---|---|---|---|---|---|---|---|---|---|---|---|---|
| | | | | | | | | | $V_{CB}$(V) | hFE | $V_{CE}$(V) | Ic(mA) | $V_{CB}$(V) | Ie(mA) | | | | | |
| 2SA 743 | RF.PA | Si.E | −50 | −4 | −1A | 8W (Tc = 25°C) | 150 | −1mA | −50 | 120 | −4 | −50 | −4 | 30 | | 120* | 30 | 4* | F-160 |
| 2SA 744 | PA | SiEMe | −80 | −60 | −8A | 70W (Tc = 25°C) | 150 | −1mA | −80 | 60 | −4 | −3A | 12 | 500 | | 10* | 220 | 10* | F-102 |
| 2SA 745 | " | " | −100 | −6 | −8A | 70W (Tc = 25°C) | 150 | −1mA | −100 | 60 | −4 | −3A | 12 | 500 | | 10* | 220 | 20* | F-102 |
| 2SA 746 | " | " | −80 | −6 | −10A | 100W (Tc = 25°C) | 150 | −1mA | −80 | 60 | −4 | −3A | −12 | 500 | | 10* | 255 | 10* | F-102 |
| 2SA 747 | " | " | −120 | −6 | −10A | 100W (Tc = 25°C) | 150 | −1mA | 120 | 60 | −4 | −3A | −12 | 500 | | 10* | 255 | 10* | F-102 |
| 2SA 748 | RF.PA | Si.EP | −70 | −5 | −2A | 15W (Tc = 25°C) | 150 | −1 | −40 | 130 | | | −5 | 500 | | 150* | 50 | 3* | F-172 |
| 2SA 749 | SW | " | −100 | −5 | −50 | 250 | 125 | −0.1 | −50 | 80 | −1 | −20 | −10 | 10 | | >40* | 3.5 | | F-138 |
| 2SA 750 | RF.AF | Si.E | −50 | −5 | −30 | 250 | 125 | −0.1 | −40 | 300 | −3 | −0.5 | −6 | 1 | | 100* | 8 | 20* | F-138 |
| 2SA 751 | PA | Si.EP | −30 | −5 | −1A | 1W | 135 | −0.1 | −20 | 160 | −10 | −500 | −10 | 50 | | 200* | 20 | 3.5* | F-173 |
| 2SA 752 | " | " | −60 | −5 | −1A | 1W | 135 | −0.1 | −20 | 160 | −10 | −500 | −10 | 50 | | 200* | 20 | 3.5* | F-173 |
| 2SA 753 | " | Si.T | −140 | −5 | −10A | 100W (Tc = 25°C) | 150 | −1mA | −30 | 100 | −5 | −1A | −5 | 1A | | 20* | 220 | 7* | F-102 |
| 2SA 754 | " | " | −50 | −4 | −2A | 20W (Tc = 25°C) | 150 | −100 | −20 | 35-120 | −4 | −1A | | | | | | | F-158 |
| 2SA 755 | " | " | −50 | −4 | −2A | 20W (Tc = 25°C) | 150 | −100 | −20 | 35-120 | −4 | −1A | | | | | | | F-159 |
| 2SA 756 | " | " | −100 | −6 | −6A | 50W (Tc = 25°C) | 150 | −1mA | −30 | 80 | −5 | −1A | −5 | | | 20* | 240 | 12* | |
| 2SA 757 | " | " | −120 | −6 | −7A | 60W (Tc = 25°C) | 150 | −1mA | −30 | 100 | −5 | −1A | −5 | 1A | | 20* | 250 | 10 | |
| 2SA 759 | RF.PA | Si.E | −60 | −5 | −200 | 150 | 125 | −0.1 | −45 | 180 | −1 | −50 | −10 | 10 | | 200* | 8.5 | 20 | F-176 |
| 2SA 760 | " | " | −50 | −5 | −30 | 150 | 125 | −0.1 | −40 | 350 | −3 | −0.5 | −3 | 1 | | 100* | 8 | 20* | F-176 |
| 2SA 761 | " | Si.EP | −110 | −5 | −2A | 6.3W | 120 | −10 | −50 | 100 | −2 | −400 | −2 | 200 | | 80* | 55 | $Ccrbb'$ 98pS | F-181 |
| 2SA 762 | " | " | −110 | −5 | −2A | 1.5W | 150 | −10 | −50 | 100 | −2 | −400 | −2 | 200 | | 80* | 50 | $Ccrbb'$ 95pS | F-99 |
| 2SA 763 | RF.AF.LN | " | −30 | −5 | −50 | 200 | 125 | −50nA | −20 | 250 | −6 | −1 | −6 | 0.3 | | 120* | 4.5 | $Ccrbb'$ 55pS | F-138 |
| 2SA 764 | PA | Si.TME | −60 | −6 | −6A | 40W | 150 | −1mA | −60 | 80 | −4 | −1A | −10 | 500 | | 10* | 90 | 8* | F-99 |
| 2SA 765 | " | " | −80 | −6 | −6A | 40W | 150 | −1mA | −80 | 80 | −4 | −1A | −10 | 500 | | 10* | 90 | 8* | F-99 |
| 2SA 766 | " | Si.Me | −150 | −5 | −400 | 20W | 150 | −30 | −60 | 60 | −5 | −100 | −10 | 100 | | 15* | 100 | 25 | F-99 |
| 2SA 767 | RF | Si.EP | −55 | −5 | −100 | 200 | 150 | −0.1 | −30 | 120 | −1 | −10 | −10 | 1 | | 150* | 5 | 20 | F-195 |
| 2SA 768 | PA | Si.T | −60 | −6 | −4A | 30W | 150 | −1mA | −60 | 60 | −4 | −1A | −10 | 200 | | 10* | 60 | 12* | F-298 |
| 2SA 769 | " | " | −80 | −6 | −4A | 30W | 150 | −1mA | −80 | 60 | −4 | −1A | −10 | 200 | | 10* | 60 | 12* | F-298 |
| 2SA770 | " | Si.EMe | −60 | −6 | −6A | 50W | 150 | −1mA | −60 | 40 | −4 | −1A | −12 | 500 | | 10* | | | |
| 2SA 771 | " | " | −80 | −6 | −6A | 50W | 150 | −1mA | −80 | 40 | −4 | −1A | −12 | 500 | | 10* | | | |
| 2SA 772 | RF.PA | Si.EP | −16 | −6 | −2A | 750 | 120 | −0.2 | −16 | 350 | −2 | −100 | −2 | −10 | | 80* | 50 | 600pS | F-259 |
| 2SA 773 | RF.PA | Si.EP | −60 | −6 | −1A | .50 | 120 | −0.2 | −25 | 250 | −2 | −100 | −2 | 10 | | 65* | 25 | | F-259 |
| 2SA 774 | RF.LN | Si.EP | −35 | −5 | −50 | 150 | 175 | −0.1 | −10 | 540 | −5 | −2 | −5 | 2 | | 120* | 5 | 100 | F-54 |
| 2SA 775 | PA | Si.T | −100 | −4 | −700 | 12.5W | 150 | −10 | | 90 | −4 | −50 | −4 | 30 | | 30* | 35 | 25 | F-268 |
| 2SA 776 | RF.LN | Si.EP | −55 | −5 | −50 | 200 | 150 | −0.1 | −30 | 300 | −6 | −2 | −6 | 1 | 285 | 180* | 3 | 35 | F-195 |
| 2SA 777 | PA | " | −80 | −5 | −500 | 750 | 135 | −0.1 | −20 | 160 | −10 | 150 | −10 | 50 | | 120* | 20 | 2k* | F-165 |
| 2SA 778 | RF | Si.T | −150 | | −50 | 200 | 125 | −1 | −100 | 80 | −3 | −15 | −10 | 10 | | 60* | 4 | 40pS | F-170 |
| 2SA 779 | RF.PA | Si.EP | −35 | −5 | −1.5A | 10W | 150 | −20 | −30 | 150 | −2 | −50 | −2 | 200 | | 110* | 50 | 9* | F-234 |
| 2SA 780 | RF | Si.P | −50 | −4 | −1A | 10W | 150 | −1 | −30 | 120 | −4 | −50 | −4 | 50 | | 120* | 8 | 50* | F-234 |
| 2SA 781 | SW | Si.EP | −20 | −4 | −200 | 200 | 125 | −0.2 | −16 | 80 | −0.5 | −30 | −1 | 10 | | 650* | 25 | 32pS | F-170 |
| 2SA 782 | | " | −80 | −5 | −30 | 150 | 125 | −1 | −50 | 150 | −6 | −1 | −6 | 1 | | 200* | 3 | 160pS | F-235 |
| 2SA 783 | " | " | −50 | −5 | −30 | 150 | 125 | −1 | −30 | 150 | −6 | −1 | −6 | 1 | | 200* | 3 | 160pS | F-235 |
| 2SA 784 | " | " | −25 | −5 | −30 | 150 | 125 | −1 | −15 | 130 | −6 | −1 | −6 | 1 | | 200 | 3 | 160pS | F-235 |
| 2SA 785 | " | " | −80 | −5 | −50 | 150 | 125 | −1 | −50 | 150 | −3 | −10 | −6 | 1 | | 180* | 6.5 | 150pS | F-235 |
| 2SA 786 | " | " | −50 | −5 | −50 | 150 | 125 | −1 | −30 | 150 | −3 | −10 | −6 | 1 | | 180* | 6.5 | 150pS | F-235 |
| 2SA 787 | " | " | −20 | −5 | −50 | 150 | 125 | −1 | −15 | 150 | −3 | −10 | −6 | 1 | | 180* | 6.5 | 150pS | F-235 |
| 2SA 788 | RF.Conv.Mix | " | −50 | −5 | −30 | 150 | 125 | −1 | −30 | 150 | −3 | −10 | −6 | 1 | | 200* | 3 | 160pS | F-235 |
| 2SA 789 | " | " | −25 | −5 | −30 | 150 | 125 | −1 | −15 | 150 | −3 | −10 | −6 | 1 | | 200* | 3 | 160pS | F-235 |
| 2SA 790 | RF.Conv.Mix | " | −40 | −6 | −300 | 300 | 125 | −1 | −24 | 10,000 | −5 | −100 | −5 | 10 | | 200* | 5.5 | 100pS | F-235 |
| 2SA 791 | " | " | −25 | −6 | −300 | 300 | 125 | −1 | −15 | 10,000 | −5 | −100 | −5 | 10 | | 200* | 5.5 | 100pS | F-235 |
| 2SA 792 | | | | | | | | | | | | | | | | | | | |
| 2SA 793 | | | | | | | | | | | | | | | | | | | |
| 2SA 794 | PA | Si.EP | −100 | −5 | −500 | 1.2W | 150 | −1 | −100 | 160 | −10 | −150 | −10 | 50 | | 120* | 20 | 3.5k* | F-222 |
| 2SA 795 | " | " | −150 | −5 | −250 | 10W | 150 | −30 | −60 | 120 | −10 | −100 | −10 | 50 | | 120* | 15 | 15 | F-236 |
| 2SA 796 | SW | " | −30 | −10 | −300 | 300 | 125 | −0.1 | −20 | 40,000 | −6 | −100 | | | | | | | F-138 |
| 2SA 797 | | | | | | | | | | | | | | | | | | | |
| 2SA 798 | Diff.LN | Si.EP | −50 | −5 | −100 | 200 | 125 | −0.1 | −35 | 250-1200 | −6 | 1 | −6 | 1 | | 100* | 3.0 | | |
| 2SA 799 | | | | | | | | | | | | | | | | | | | |
| 2SA 800 | | | | | | | | | | | | | | | | | | | |
| 2SA 801 | | | | | | | | | | | | | | | | | | | |
| 2SA 802 | | | | | | | | | | | | | | | | | | | |
| | | | | | | | | | | | | | | | | | | | |

**Pin Configurations are 1. Emitter, 2. Base, 3. Collector, 4. Shield, unless otherwise specified. (Outline Dimensions: mm)**

| TYPE NO. | USES | MATERIAL STRUCTURE | $V_{CBO}$ (V) | $V_{EBO}$ (V) | $I_C$ (mA) | $P_d$ (mW) | $T_j$ (°C) | $I_{CBO}$ (uA) | VALUE OF DC/PULSE | | | | BIAS | | hfe hfb* | fab fT (Mc) | Cob (pF) | $r_{bb'}$ $h_{ie(real)}$* (Ω) | CASE STYLE |
|---|---|---|---|---|---|---|---|---|---|---|---|---|---|---|---|---|---|---|---|
| | | | | | | | | | $V_{CB}$(V) | hFE | $V_{CE}$(V) | $I_C$(mA) | $V_{CB}$(V) | $I_e$(mA) | | | | | |
| 2SA 803 | | | | | | | | | | | | | | | | | | | |
| 2SA 804 | | | | | | | | | | | | | | | | | | | |
| 2SA 805 | | | | | | | | | | | | | | | | | | | |
| 2SA 806 | | | | | | | | | | | | | | | | | | | |
| 2SA 807 | PA | Si.T | −60 | −6 | −6A | 50W (Tc = 25°C) | 150 | −1mA | −60 | 60 | −4 | −3A | −12 | 500 | | 10* | 90 | 8* | F-102 |
| 2SA 808 | " | " | −80 | −6 | −6A | 50W (Tc = 25°C) | 150 | −1mA | −80 | 60 | −4 | −3A | −12 | 500 | | 10* | 90 | 8* | F-102 |
| 2SA 809 | RF | Si.EP | −150 | −5 | −50 | 700 | 175 | −1 | −140 | 150 | −5 | −10 | −5 | 10 | | 100* | 3 | 70* | F-248 |
| 2SA 810 | " | " | −150 | −5 | −50 | 700 | 175 | −1 | −140 | 150 | −5 | −10 | −5 | 10 | | 100* | 3 | 70* | F-248 |
| 2SA 811 | RF.AF | Si.PaE | −50 | −5 | −30 | 150 | 125 | −0.05 | −40 | 400 | −3 | −0.5 | −3 | 1 | | 100* | 8 | 20* | F-176 |
| 2SA 812 | " | Si.E | −50 | −5 | −100 | 150 | 125 | −0.1 | −40 | 200 | −6 | −1 | −6 | 10 | | 180* | 8 | 35pS | F-176 |
| 2SA 813 | RF.PA | " | −60 | −5 | −200 | 150 | 125 | −0.1 | −45 | 80 | −1 | −50 | −10 | 10 | | 200* | 8.5 | 20 | F-176 |
| 2SA 814 | " | Si.Eb | −120 | −5 | −1A | 1.5W | 150 | −0.5 | −50 | 70-240 | −2 | −150 | −2 | 150 | | 30* | 30 | 5 | F-119 |
| 2SA 815 | " | " | −100 | −5 | −1A | 1.5W | 150 | −0.5 | −50 | 70-240 | −2 | −150 | −2 | 150 | | 30* | 30 | 5 | F-119 |
| 2SA 816 | " | Si.E | −80 | −5 | −750 | 1.5W | 150 | −0.5 | −30 | 70-240 | −2 | −150 | −2 | 150 | | 100* | 20 | 5 | F-119 |
| 2SA 817 | " | " | −70 | −5 | −750 | 600 | 150 | −0.1 | −20 | 70-240 | −2 | −50 | −2 | 50 | | 150* | 9 | 5 | F-131 |
| 2SA 818 | " | Si.T | −180 | −5 | −50 | 1W | 150 | −1 | −100 | 70-240 | −5 | −10 | −10 | 10 | | 120* | 4.5 | 10 | F-249 |
| 2SA 819 | | | | | | | | | | | | | | | | | | | |
| 2SA 820 | | | | | | | | | | | | | | | | | | | |
| 2SA 821 | | | | | | | | | | | | | | | | | | | |
| 2SA 822 | | | | | | | | | | | | | | | | | | | |
| 2SA 823 | | | | | | | | | | | | | | | | | | | |
| 2SA 824 | | | | | | | | | | | | | | | | | | | |
| 2SA 825 | | | | | | | | | | | | | | | | | | | |
| 2SA 826 | | | | | | | | | | | | | | | | | | | |
| 2SA 827 | | | | | | | | | | | | | | | | | | | |
| 2SA 828 | | | | | | | | | | | | | | | | | | | |
| 2SA 829 | | | | | | | | | | | | | | | | | | | |
| 2SA 830 | | | | | | | | | | | | | | | | | | | |
| 2SA 831 | | | | | | | | | | | | | | | | | | | |
| 2SA 832 | | | | | | | | | | | | | | | | | | | |
| 2SA 833 | | | | | | | | | | | | | | | | | | | |
| 2SA 834 | | | | | | | | | | | | | | | | | | | |
| 2SA 835 | AF.RF | Si.E | −140 | −8 | −500 | 950 | 120 | −0.2 | −100 | 150 | −2 | −100 | −10 | 20 | | 45* | 30 | | F-174 |
| 2SA 836 | LN | Si.EP | −55 | −5 | −100 | 200 | 125 | −0.1 | −18 | 380 | −12 | −2 | −12 | 2 | | 200* | 1.8 | 10* | F-170 |
| 2SA 837 | RF.PA | Si.EMe | −90 | −5 | −4A | 50W (Tc = 25°C) | 150 | −1mA | −50 | 100 | −4 | −1A | −10 | 500 | | 10* | 200 | 10 | F-102 |
| 2SA 838 | RF | Si.Ep | −30 | −5 | −30 | 250 | 125 | −0.1 | −10 | 100 | −10 | −1 | −10 | 1 | | 300* | 1.5 | 22 | F-138 |
| 2SA 839 | RF.PA | SI.TMe· | −150 | −5 | −1.5A | 25W (Tc = 25°C) | 150 | −20 | −100 | 40-240 | −10 | −500 | −10 | 500 | | 6* | 100 | 25 | F-119 |
| 2SA 840 | AF.RF | Si.E | −140 | −8 | −500 | 750 | 120 | −0.2 | −100 | 150 | −2 | −100 | −10 | 20 | | 45* | | | F-259 |
| 2SA 841 | LN | Si.EP | −60 | −5 | −50 | 200 | 125 | −0.1 | −35 | 450 | −6 | −2 | −6 | | 450 | 140* | | | F-33 |
| 2SA 842 | " | " | −40 | −5 | −50 | 200 | 125 | −0.1 | −35 | 450 | −6 | −2 | −6 | | | 140* | | | F-33 |
| 2SA 843 | RF.PA | Si.EMe | −200 | −5 | −50 | 20W (Tc = 25°C) | 150 | −50 | −200 | 120 | −10 | −400 | −10 | 200 | | 35* | 80 | 25 | F-268 |
| 2SA 844 | RF | Si.EP | −55 | −5 | −100 | 300 | 125 | −0.1 | −18 | 380 | −12 | −2 | −12 | 2 | | 200* | 1.8 | 10* | F-170 |
| 2SA 845 | | | | | | | | | | | | | | | | | | | |
| 2SA 846 | | | | | | | | | | | | | | | | | | | |
| 2SA 847 | AF.LN.RF | Si.EP | −90 | −5 | −50 | 200 | 125 | −0.1 | −50 | 250-1200 | −6 | −1 | −6 | 1 | | 150* | 2.5 | | F-138B |
| 2SA 848 | AF | " | −150 | −5 | −50 | 1W | 175 | −1 | −140 | 150 | −5 | −10 | −5 | 10 | | 100* | 3 | | F-90 |
| 2SA 849 | " | " | −150 | −5 | −50 | 1W | 175 | −1 | −140 | 150 | −5 | −10 | −5 | 10 | | 100* | 3 | | F-90 |
| 2SA 850 | AF.Drive | " | −100 | −5 | −500 | 800 | 125 | −1 | −50 | 55-300 | −10 | −10 | −6 | 10 | | 130* | 11 | | F-242 |
| 2SA 851 | | | | | | | | | | | | | | | | | | | |
| 2SA 852 | | | | | | | | | | | | | | | | | | | |
| 2SA 853 | | | | | | | | | | | | | | | | | | | |
| 2SA 854 | | | | | | | | | | | | | | | | | | | |
| 2SA 855 | RF.LN | Si.EP | −60 | −5 | −50 | 150 | 150 | −0.1 | −35 | 450 | −6 | −1 | −6 | 1 | 450 | 140* | 4.5 | 40 | F-49C |
| 2SA 856 | " | " | −50 | −5 | −50 | 150 | 150 | −0.1 | −35 | 450 | −6 | −1 | −6 | 1 | | 140* | 4.5 | 40 | F-49C |
| 2SA 857 | AF | Si.EP | −150 | −5 | −50 | 500 | 150 | −1 | −140 | 150 | −5 | −10 | −5 | 10 | | 100* | 3 | | F-138 |
| 2SA 858 | " | " | −150 | −5 | −50 | 500 | 150 | −1 | −140 | 150 | −5 | −10 | −5 | 10 | | 100* | 3 | | F-138 |
| 2SA 859 | RF | Si.E | −300 | −5 | −500 | 625 | 150 | −0.25 | −200 | 125 | −10 | −10 | −20 | 10 | | 120* | 3 | 300pS | F-138D |
| 2SA 860 | " | " | −200 | −5 | −50 | 625 | 150 | −0.25 | −160 | 125 | −10 | −10 | −20 | 10 | | 120* | 3 | 300pS | F-138D |
| 2SA 861 | RF.AF | " | −20 | −6 | −2A | 950 | 120 | −0.2 | −16 | 199-451 | −2 | −100 | −2 | 10 | | 80* | | | F-174B |
| 2SA 862 | | | | | | | | | | | | | | | | | | | |

**Pin Configurations are 1. Emitter, 2. Base, 3. Collector, 4. Shield, unless otherwise specified. (Outline Dimensions: mm)**

| TYPE NO. | USES | MATERIAL STRUCTURE | $V_{CBO}$ (V) | $V_{EBO}$ (V) | $I_C$ (mA) | Pd (mW) | Tj (°C) | $I_{CBO}$ (uA) | VALUE OF DC/PULSE $V_{CB}$(V) | hFE | $V_{CE}$(V) | $I_C$(mA) | BIAS $V_{CB}$(V) | $I_e$(mA) | hfe hfb* | fab fT (Mc) | Cob (pF) | $r_{bb'}$ $h_{ie(real)}$* (Ω) | CASE STYLE |
|---|---|---|---|---|---|---|---|---|---|---|---|---|---|---|---|---|---|---|---|
| 2SA 863 | | | | | | | | | | | | | | | | | | | |
| 2SA 864 | | | | | | | | | | | | | | | | | | | |
| 2SA 865 | | | | | | | | | | | | | | | | | | | |
| 2SA 866 | RF | Si.EP | −30 | −5 | −100 | 300 | 125 | −0.1 | −20 | 250 | −6 | −1 | −10 | 2 | | 150* | 4 | 50pS | F-138D |
| 2SA 867 | " | " | −60 | −5 | −100 | 300 | 125 | −0.1 | −20 | 250 | −6 | −1 | −10 | 2 | | 150* | 4 | 50pS | F-138D |
| 2SA 868 | " | " | −90 | −5 | −100 | 300 | 125 | −0.1 | −20 | 250 | −6 | −1 | −10 | 2 | | 150* | 4 | 50pS | F-138D |
| 2SA 869 | " | " | −30 | −5 | −400 | 500 | 125 | −0.5 | −20 | 200 | −1 | −100 | −10 | 5 | | 150* | 8 | 50pS | F-138D |
| 2SA 870 | " | " | −60 | −5 | −400 | 500 | 125 | −0.5 | −20 | 200 | −1 | −100 | −10 | 5 | | 150* | 8 | | F-138D |
| 2SA 871 | RF.AF.LN | " | −30 | −5 | −50 | 200 | 125 | −0.05 | −20 | 250 | −6 | −1 | −6 | 0.3 | | 120* | 4.5 | 55pS | F-138D |
| 2SA 872 | RF.LN | " | −90 | −5 | −50 | 200 | 125 | −0.5 | −75 | 500 | −12 | −2 | −12 | 2 | | 120* | 1.8 | 12* | F-138 |
| 2SA 873 | RF | Si.EP | −60 | −6 | −200 | 300 | 150 | −0.5 | −40 | 140 | −1 | −10 | −10 | 10 | | 220* | 5 | 70* | F-275 |
| 2SA 874 | | | | | | | | | | | | | | | | | | | |
| 2SA 875 | | | | | | | | | | | | | | | | | | | |
| 2SA 876 | | | | | | | | | | | | | | | | | | | |
| 2SA 877 | PA | Si.TMe | −80 | −6 | −10A | 100W (Tc = 25°C) | 150 | −100 | −80 | 60 | −4 | −3A | −12 | 500 | | 15* | 255 | 10* | F-102 |
| 2SA 878 | " | " | −120 | −6 | −10A | 100W (Tc = 25°C) | 150 | −100 | −120 | 60 | −4 | −3A | −12 | 500 | | 15* | 255 | 10* | F-102 |
| 2SA 879 | RF.AF | Si.EP | −250 | −5 | −70 | 600 | 135 | −10 | −250 | 100 | −10 | −5 | −10 | 3 | | 80* | 5 | 60pS | F-165 |
| 2SA 880 | RF.LN | Si.EP | −35 | −5 | −50 | 150 | 125 | −0.1 | −10 | 540 | −5 | −2 | −5 | 2 | | 120* | 5 | 100 | F-276 |
| 2SA 881 | | | | | | | | | | | | | | | | | | | |
| 2SA 882 | PA | Si.EMe | −130 | −5 | −7A | 100W (Tc = 25°C) | 150 | −500 | −70 | 150 | −5 | −7A | −10 | 500 | | 7* | 800 | 10 | F-102 |
| 2SA 883 | RF.SW | Si.E | −60 | −8 | −200 | 300 | 150 | −0.1 | −40 | 160 | −1 | −10 | −10 | 10 | | 280* | 7.5 | | F-138 |
| 2SA 884 | RF | " | −65 | −5 | −200 | 270 | 120 | −0.5 | −50 | 250 | −3 | −1 | −6 | 1 | | 140* | 6 | 60pS | F-277 |
| 2SA 885 | PA | Si.EP | −45 | −5 | −1A | 1.2W | 150 | −0.1 | −20 | 160 | −10 | −500 | −10 | 50 | | 200* | 22 | 3.5k* | F-222 |
| 2SA 886 | " | " | −50 | −5 | −1.5A | 1.2W | 150 | −1 | −20 | 120 | −5 | −1A | −5 | 500 | | 150* | 50 | 3.3k* | F-222 |
| 2SA 887 | " | " | −70 | −5 | −2A | 1.2W | 150 | −1 | −40 | 130 | −5 | −1A | −5 | 500 | | 150* | 50 | 3k* | F-161 |
| 2SA 888 | RF.AF | " | −25 | −5 | −50 | 350 | 135 | −1 | −10 | 250 | −5 | −2 | −5 | 2 | 150 | 100* | 2,7 | 100 | F-138D |
| 2SA 889 | " | " | −45 | −5 | −50 | 350 | 135 | −1 | −10 | 250 | −5 | −2 | −5 | 2 | 150 | 100* | 2.7 | 100 | F-138D |
| 2SA 890 | PA | " | −30 | −5 | −500 | 625 | 135 | −0.1 | −20 | 160 | −10 | −150 | −10 | 50 | | 200* | 6 | 3.5k* | F-138D |
| 2SA 891 | " | " | −60 | −5 | −500 | 625 | 135 | −0.1 | −20 | 160 | −10 | −150 | −10 | 50 | | 200* | 6 | 3.5k* | F-138D |
| 2SA 892 | | | | | | | | | | | | | | | | | | | |
| 2SA 893 | | | | | | | | | | | | | | | | | | | |
| 2SA 894 | RF | Si.EP | −30 | −6 | −1A | 600 | 125 | −0.5 | −20 | 200 | −1 | −100 | −10 | 50 | | 150* | 25 | 100pS | F-138 |
| 2SA 895 | " | " | −30 | −4 | −30 | 200 | 125 | -0.5 | −20 | 100 | −6 | −1 | −10 | 2 | | 500* | 1 | 8pS | F-138 |
| 2SA 896 | " | Si.E | −200 | −5 | −100 | 750 | 120 | −0.2 | −100 | 150 | −5 | −3 | −10 | 10 | | 70* | 3 | 50pS | F-259 |
| 2SA 897 | | | | | | | | | | | | | | | | | | | |
| 2SA 898 | | | | | | | | | | | | | | | | | | | |
| 2SA 899 | | | | | | | | | | | | | | | | | | | |
| 2SA 900 | PA | Si.EP | −18 | −5 | −1A | 1.2W | 150 | −100 | −18 | 200 | −2 | −500 | −6 | 50 | | 150* | 40 | 3.5k* | F-222 |
| 2SA 901 | | | | | | | | | | | | | | | | | | | |
| 2SA 902 | | | | | | | | | | | | | | | | | | | |
| 2SA 903 | | | | | | | | | | | | | | | | | | | |
| 2SA 904 | | | | | | | | | | | | | | | | | | | |
| 2SA 905 | | | | | | | | | | | | | | | | | | | |
| 2SA 906 | | | | | | | | | | | | | | | | | | | |
| 2SA 907 | PA | Si.E | −100 | −6 | −15A | 150W (Tc = 25°C) | 150 | −1mA | −100 | 50 | −4 | −5A | −12 | 500 | | 10* | 270 | 10* | F-102 |
| 2SA 908 | " | " | −150 | −6 | −15A | 150W (Tc = 25°C) | 150 | −1mA | −150 | 50 | −4 | −5A | −12 | 500 | | 10* | 270 | 10* | F-102 |
| 2SA 909 | " | " | −200 | −6 | −15A | 150W (Tc = 25°C) | 150 | −1mA | −200 | 50 | −4 | −5A | −12 | 500 | | 10* | 270 | 10* | F-102 |
| 2SA 910 | | | | | | | | | | | | | | | | | | | |
| 2SA 911 | RF | Si.E | −850 | −12 | −100 | 470 | 120 | −1.5 | −100 | 50 | −5 | −10 | −10 | 10 | | 9* | 8 | 70pS | F-84C |
| 2SA 912 | PA | Si.EP | −150 | −5 | −50 | 750 | 135 | −1 | −100 | 200 | −5 | −10 | −10 | 10 | | 200* | 3 | 6k* | F-165 |
| 2SA 913 | RF | " | −150 | −5 | −1A | 15W (Tc = 25°C) | 150 | −10 | −150 | 150 | −10 | −150 | −10 | 50 | | 120* | 30 | 3k* | F-268 |
| 2SA 914 | " | " | −150 | −5 | −50 | 1W | 150 | −1 | −100 | 150 | −5 | −10 | −10 | 10 | | 200* | 3 | 3.5k* | F-222 |
| 2SA 915 | AF | Si.E | −120 | −5 | −50 | 800 | 150 | −0.1 | −120 | 200 | −10 | −10 | −10 | 10 | | 80* | 2.5 | | F-278 |
| 2SA 916 | " | " | −160 | −5 | −50 | 800 | 150 | −0.1 | −160 | 200 | −10 | −10 | −10 | 10 | | 80* | 2.5 | | F-278 |
| 2SA 917 | RF | " | −120 | −5 | −100 | 750 | 120 | −0.2 | −100 | 150 | −5 | −3 | −10 | 10 | | 70* | 3 | 50pS | F-259 |
| 2SA 918 | | | | | | | | | | | | | | | | | | | |
| 2SA 919 | | | | | | | | | | | | | | | | | | | |
| 2SA 920 | | | | | | | | | | | | | | | | | | | |
| 2SA 921 | RF | Si.EP | −120 | −5 | −20 | 150 | 125 | −0.1 | −50 | 600 | −5 | −2 | −30 | 1 | | 200* | 3 | 70 | F-138 |
| 2SA922 | | | | | | | | | | | | | | | | | | | |

Pin Configurations are 1. Emitter, 2. Base, 3. Collector, 4. Shield, unless otherwise specified. (Outline Dimensions: mm)

| TYPE NO. | USES | MATERIAL STRUCTURE | $V_{CBO}$ (V) | $V_{EBO}$ (V) | Ic (mA) | Pd (mW) | Tj (°C) | $I_{CBO}$ (uA) | VALUE OF DC/PULSE | | | | BIAS | | hfe hfb* | fab fT (Mc) | Cob (pF) | $r_{bb'}$ $h_{ie(real)}$* (Ω) | CASE STYLE |
|---|---|---|---|---|---|---|---|---|---|---|---|---|---|---|---|---|---|---|---|
| | | | | | | | | | $V_{CB}$(V) | hFE | $V_{CE}$(V) | $I_C$(mA) | $V_{CB}$(V) | $I_e$(mA) | | | | | |
| 2SA 923 | | | | | | | | | | | | | | | | | | | |
| 2SA 924 | | | | | | | | | | | | | | | | | | | |
| 2SA 925 | | | | | | | | | | | | | | | | | | | |
| 2SA 926 | | | | | | | | | | | | | | | | | | | |
| 2SA 927 | | | | | | | | | | | | | | | | | | | |
| 2SA 928 | | | | | | | | | | | | | | | | | | | |
| 2SA 929 | | | | | | | | | | | | | | | | | | | |
| 2SA 930 | | | | | | | | | | | | | | | | | | | |
| 2SA 031 | | | | | | | | | | | | | | | | | | | |
| 2SA 932 | | | | | | | | | | | | | | | | | | | |
| 2SA 933 | | | | | | | | | | | | | | | | | | | |
| 2SA 934 | | | | | | | | | | | | | | | | | | | |
| 2SA 935 | | | | | | | | | | | | | | | | | | | |
| 2SA 936 | | | | | | | | | | | | | | | | | | | |
| 2SA 937 | | | | | | | | | | | | | | | | | | | |
| 2SA 938 | | | | | | | | | | | | | | | | | | | |
| 2SA 939 | | | | | | | | | | | | | | | | | | | |
| 2SA 940 | RF.PA | Si.TMe | −150 | −5 | −1.5A | 25W ($T_C$ = 25°C) | 150 | −10 | −120 | 75 | −10 | −500 | −10 | 500 | | 4* | 55 | 25 | F-268 |
| 2SA 941 | | | | | | | | | | | | | | | | | | | |
| 2SA 942 | | | | | | | | | | | | | | | | | | | |
| 2SA 943 | | | | | | | | | | | | | | | | | | | |
| 2SA 944 | | | | | | | | | | | | | | | | | | | |
| 2SA 945 | | | | | | | | | | | | | | | | | | | |
| 2SA 946 | | | | | | | | | | | | | | | | | | | |
| 2SA 947 | | | | | | | | | | | | | | | | | | | |
| 2SA 948 | | | | | | | | | | | | | | | | | | | |
| 2SA 949 | | | | | | | | | | | | | | | | | | | |
| 2SA 950 | RF.PA | Si.EP | −30 | −5 | −800 | 600 | 150 | −0.1 | −20 | 200 | −1 | −100 | −5 | 10 | | 120* | 19 | 25 | F-138 |
| 2SA 951 | | | | | | | | | | | | | | | | | | | |
| 2SA 952 | AF.PA | Si.E | −30 | −5 | −70 | 600 | 150 | −0.1 | −30 | 200 | −1 | −100 | −6 | 10 | | 160* | 17 | | F-138 |
| 2SA 953 | AF.PA | Si.E | −60 | −5 | −300 | 600 | 150 | −0.1 | −60 | 200 | −1 | −50 | −6 | 10 | | 100* | 13 | | F-138 |
| 2SA 954 | " | " | −80 | −5 | −300 | 600 | 150 | −0.1 | −80 | 200 | −1 | −50 | −6 | 10 | | 100* | 13 | | F-138 |
| 2SA 955 | | | | | | | | | | | | | | | | | | | |
| 2SA 956 | RF.AF | Si.E | −60 | −8 | −100 | 150 | 125 | −0.1 | −40 | 160 | −1 | −10 | −10 | 10 | | 280* | 7.5 | | F-176 |
| 2SA 957 | | | | | | | | | | | | | | | | | | | |
| 2SA 958 | | | | | | | | | | | | | | | | | | | |
| 2SA 959 | | | | | | | | | | | | | | | | | | | |
| 2SA 960 | | | | | | | | | | | | | | | | | | | |
| 2SA 961 | | | | | | | | | | | | | | | | | | | |
| 2SA 962 | | | | | | | | | | | | | | | | | | | |
| 2SA 963 | | | | | | | | | | | | | | | | | | | |
| 2SA 964 | | | | | | | | | | | | | | | | | | | |
| 2SA 965 | | | | | | | | | | | | | | | | | | | |
| 2SA 966 | | | | | | | | | | | | | | | | | | | |
| 2SA 967 | | | | | | | | | | | | | | | | | | | |
| 2SA 968 | | | | | | | | | | | | | | | | | | | |
| 2SA 969 | | | | | | | | | | | | | | | | | | | |
| 2SA 970 | | | | | | | | | | | | | | | | | | | |
| 2SA 971 | | | | | | | | | | | | | | | | | | | |
| 2SA 972 | | | | | | | | | | | | | | | | | | | |
| 2SA 973 | | | | | | | | | | | | | | | | | | | |
| 2SA 974 | | | | | | | | | | | | | | | | | | | |
| 2SA 975 | | | | | | | | | | | | | | | | | | | |
| 2SA 976 | | | | | | | | | | | | | | | | | | | |
| 2SA 977 | | | | | | | | | | | | | | | | | | | |
| 2SA 978 | | | | | | | | | | | | | | | | | | | |
| 2SA 979 | | | | | | | | | | | | | | | | | | | |
| 2SA 980 | | | | | | | | | | | | | | | | | | | |
| 2SA 981 | | | | | | | | | | | | | | | | | | | |
| 2SA 982 | | | | | | | | | | | | | | | | | | | |

Pin Configurations are 1. Emitter, 2. Base, 3. Collector, 4. Shield, unless otherwise specified. (Outline Dimensions: mm)

| TYPE NO. | USES | MATERIAL STRUCTURE | $V_{CBO}$ (V) | $V_{EBO}$ (V) | $I_C$ (mA) | Pd (mW) | Tj (°C) | $I_{CBO}$ (uA) | VALUE OF DC/PULSE $V_{CB}$(V) | hFE | $V_{CE}$(V) | $I_C$(mA) | BIAS $V_{CB}$(V) | $I_E$(mA) | hfe hfb* | fab fT (Mc) | Cob (pF) | $r_{bb'}$ $h_{ie(real)}$* (Ω) | CASE STYLE |
|---|---|---|---|---|---|---|---|---|---|---|---|---|---|---|---|---|---|---|---|
| 2SB 12 | AF | Ge.A | −30 | | −50 | 50 | 70 | −15 | −30 | | | | −6 | 1 | -.98* | 0.8 | | | F-61 |
| 2SB 13 | " | " | −30 | | −50 | 100 | 70 | −15 | −30 | | | | −6 | 1 | -0.98* | 0.8 | | | F-61 |
| 2SB 14 | LN | " | −30 | | −50 | 100 | 70 | −15 | −30 | | | | −6 | 1 | 0.98* | 0.8 | | NF = 5dB (f = 1kc) | F-61 |
| 2SB 15 | AF | " | −60 | | −50 | 100 | 70 | −15 | −60 | | | | −6 | 1 | -0.98* | 0.8 | | | F-61 |
| 2SB 16 | PA | " | −16 | | −600 | 1.8W (Tc = 25°C) | 70 | −20 | −5 | 50 | −2 | −50 | | | | | | | F-93 |
| 2SB 16A | " | " | −20 | | −600 | 1.8W (Tc = 25°C) | 70 | −20 | −5 | 50 | −2 | −50 | | | | | | | F-93 |
| 2SB 17 | " | " | −32 | | −600 | 1.8W (Tc = 25°C) | 70 | −20 | −5 | 50 | −2 | −50 | | | | | | | F-93 |
| 2SB 17A | " | " | −40 | | −600 | 1.8W (Tc = 25°C) | 70 | −20 | −5 | 50 | −2 | −50 | | | | | | | F-93 |
| 2SB 18 | " | " | −60 | | −600 | 1.8W (Tc = 25°C) | 70 | −20 | −5 | 50 | −2 | −50 | | | | | | | F-93 |
| 2SB 18A | " | " | −80 | | −600 | 1.8W (Tc = 25°C) | 70 | −20 | −5 | 50 | −2 | −50 | | | | | | | F-93 |
| 2SB 19 | " | " | −16 | | −2.5A | 5.5W (Tc = 25°C) | 70 | −100 | −5 | 50 | −2 | −50 | | | | | | | F-94 |
| 2SB 20 | " | " | −32 | | −2.5A | 5.5W (Tc = 25°C) | 70 | −100 | −5 | 50 | −2 | −50 | | | | | | | F-94 |
| 2SA 21 | " | " | −60 | | −2.5A | 5.5W (Tc = 25°C) | 70 | −100 | −5 | 50 | −2 | −50 | | | | | | | F-94 |
| 2SB 22 | " | " | −25 | −12 | −200 | 300 | 85 | −15 | −20 | 100 | −1.5 | −100 | −6 | 100 | | | 1 | | F-63 |
| 2SB 23 | AF | " | −15 | −5 | −10 | 40 | 75 | −10 | −15 | | | | −6 | 1 | 70 | 1.5 | | | F-12A |
| 2SB 24 | " | " | −15 | −10 | −15 | 100 | 75 | −15 | −15 | | | | −6 | 1 | 70 | 1.5 | 12 | | F-6 |
| 2SB 25 | PA | " | −60 | −12 | −1.5A | 20W (Tc = 25°C) | 75 | −160 | −12 | 60 | −1.5 | −1A | −1.5 | 500 | | 0.25 | | | F-102 |
| 2SB 26 | " | " | −32 | −12 | −1.5A | 20W (Tc = 25°C) | 75 | −160 | −12 | 60 | −1.5 | −1A | −1.5 | 500 | | 0.25 | | | F-102 |
| 2SB 26A | " | " | −60 | −12 | −1.5A | 20W (Tc = 25°C) | 75 | −160 | −12 | 60 | −1.5 | −1A | −1.5 | 500 | | 0.25 | | | F-102 |
| 2SB 27 | " | " | −15 | −10 | −0.5A | 5W (Tc = 25°C) | 85 | −800 | −15 | 29 | −1.5 | −200 | | | | *fae* = 7kc | 200 | | F-103 |
| 2SB 28 | " | " | −15 | −10 | −0.5A | 5W (Tc = 25°C) | 85 | −800 | −15 | 68 | −1.5 | −200 | | | | *fae* = 7kc | 200 | | F-103 |
| 2SB 29 | " | " | −15 | −10 | −0.5A | 5W (Tc = 25°C) | 85 | −800 | −15 | 115 | −1.5 | −200 | | | | *fae* = 7kc | 200 | | F-103 |
| 2SB 30 | " | " | −15 | −10 | −0.5A | 5W (Tc = 25°C) | 85 | −800 | −15 | 68 | −1.5 | −200 | | | | *fae* = 7kc | 200 | | F-103 |
| 2SB 31 | " | " | −15 | −10 | −0.5A | 5W (Tc = 25°C) | 85 | −800 | −15 | 115 | −1.5 | −200 | | | | *fae* 7kc | 200 | | F-103 |
| 2SB 32 | AF | " | −20 | −2.5 | −50 | 150 | 85 | −14 | −12 | | | | −9 | | 40 | 0.8 | | | F-12A |
| 2SA 33 | PA | " | −20 | −2.5 | −50 | 150 | 85 | −14 | −12 | 70 | −1 | −50 | −6 | 1 | 80 | •1 | | | F-12A |
| 2SB 34 | " | " | −20 | −2.5 | −150 | 250 | 85 | −14 | −12 | 70 | −1 | −150 | −6 | 1 | 85 | 0.8 | | | F-71A |
| 2SB 37 | " | " | −30 | −12 | −50 | 150 | 85 | −14 | −30 | 70 | −1 | −50 | −6 | 1 | 80 | 1 | | | F-12A |
| 2SB 38 | " | " | −30 | −12 | −150 | 250 | 85 | −16 | −30 | 70 | −1 | −150 | −6 | 1 | 85 | 0.8 | | | F-71A |
| 2SB 39 | LN | " | −10 | −10 | −2 | 50 | 85 | −10 | −10 | | | | −4 | 0.5 | 65 | | | | F-12A |
| 2SB 40 | SW | Ge.A | −40 | −12 | −100 | 80 | 75 | −10 | −12 | 100 | −1 | −6 | −1 | | | >0.7 | ≤50 | <180 | F-12A |
| 2SB 41 | PA | " | −40 | −12 | −1.2A | 44W (Tc = 25°C) | 91 | −2mA | −30 | 65 | −1.5 | −1A | −14.4 | 50 | | | | | F-102 |
| 2SB 42 | " | " | −60 | −12 | −1.2A | 44W (Tc = 25°C) | 91 | −2mA | −30 | 65 | −1.5 | −1A | −14.4 | 50 | | | | | F-102 |
| 2SB 43 | " | " | −25 | −12 | −50 | 150 | 75 | −10 | −12 | 70 | −1 | −50 | −6 | 1 | | 1 | 35 | | F-12A |
| 2SB 43A | " | " | | | | | | | | | | | | | | | | | F-12A |
| 2SB 44 | AF | " | −30 | −12 | −50 | 80 | 75 | −10 | −12 | | | | −6 | 1 | 85 | >0.5 | 30 | | F-12A |
| 2SB 46 | " | " | −25 | −12 | −50 | 80 | 75 | −5 | −12 | | | | −6 | 1 | 140 | | 35 | | F-12A |
| 2SB 47 | LN | " | −25 | −12 | −50 | 80 | 75 | −14 | −25 | | | | −6 | 1 | 140 | | | | F-12A |
| 2SB 48 | AF.PA | " | −16 | | −100 | 140 | 65 | −16 | −16 | 43 | −1 | −20 | −6 | 1 | -0.973* | 2.5 | 25 | | F-84A |
| 2SB 49 | " | " | −16 | | −100 | 140 | 65 | −16 | −16 | 83 | −1 | −20 | −6 | 1 | -0.985* | 3.0 | 25 | | F-84A |
| 2SB 50 | " | " | −16 | | −100 | 140 | 65 | −16 | −16 | 131 | −1 | −20 | −6 | 1 | 0.990* | 3.5 | 25 | | F-84A |
| 2SB 51 | PA | " | −30 | −3 | −200 | 200 | 85 | −16 | −25 | 43 | −1 | −20 | −6 | 1 | -0.973* | 2.0 | 25 | | F-84A |
| 2SB 52 | " | " | −30 | −3 | −200 | 200 | 85 | −16 | −25 | 83 | −1 | −20 | −6 | 1 | -0.985* | 3.0 | 25 | | F-84A |
| 2SB 53 | " | " | −30 | −15 | −250 | 200 | 85 | −10 | −30 | 70 | −1 | −20 | −6 | 1 | -0.982* | 3.0 | 25 | | F-84A |
| 2SB 54 | AF | " | −30 | −12 | −150 | 150 | 75 | −14 | −30 | | | | −6 | 1 | 80-300 | 1* | 35 | 120 | F-12A |
| 2SB 55 | PA | " | −60 | −12 | −50 | 150 | 75 | −14 | −25 | 80 | −1 | −50 | −6 | 1 | | 1 | 35 | | F-12A |
| 2SB 56 | " | " | −30 | −12 | −150 | 150 | 75 | −14 | −30 | 80 | −1 | −50 | −6 | 1 | | 1 | 35 | 120 | F-12A |
| 2SB 56A | " | " | −45 | −12 | −150 | 150 | 75 | −14 | −25 | 80 | −1 | −50 | −6 | 1 | | 1 | 35 | | F-12A |
| 2SB 57 | AF | " | −30 | −10 | −100 | 100 | 70 | −15 | −30 | | | | −6 | 1 | 70 | | | | F-78 |
| 2SB 58 | " | " | −12 | −2.5 | −50 | 100 | 70 | −15 | −12 | | | | −6 | 1 | -0.98* | | | | F-78 |
| 2SB 59 | SW | " | −30 | −10 | −100 | 150 | 85 | −15 | −30 | 70 | −1 | −50 | | | | | | | F-12A |
| 2SB 60 | AF | " | −20 | −2.5 | −50 | 150 | 85 | −14 | −12 | | | | −6 | 1 | 70 | | | | F-12A |
| 2SB 60A | " | " | −20 | −2.5 | −50 | 150 | 85 | −14 | −12 | 70 | −1 | −50 | | | | | | | F-12A |
| 2SB 61 | " | " | −30 | −12 | −50 | 150 | 85 | −10 | −30 | | | | −6 | 1 | 85 | 1 | 40 | | F-12A |
| 2SB 62 | PA | " | −60 | −12 | −500 | 2W (Tc = 25°C) | 75 | −70 | −12 | 60 | −1 | −500 | −1 | 100 | | 0.4 | | | F-101 |
| 2SB 63 | " | " | −32 | −12 | −500 | 2W (Tc = 25°C) | 75 | −70 | −12 | 60 | −1 | −500 | −1 | 100 | | 0.4 | | | F-101 |
| 2SB 64 | " | Ge.D | −100 | −1 | −6A | 25W (Tc = 25°C) | 75 | −330 | −12 | 70 | −1.5 | −1A | −1.5 | 500 | | 1 | | | F-102 |
| 2SB 65 | SW | Ge.A | −30 | −12 | −100 | 150 | 85 | −15 | −30 | | | | −6 | 1 | 65 | 1 | 40 | | F-12A |
| 2SB 66 | AF | " | −30 | −12 | −50 | 100 | 85 | −15 | −30 | | | | −6 | 1 | -0.984* | | | | F-12A |
| 2SB 67 | PA | " | −55 | −12 | −150 | 350 | 70 | −10 | −12 | 63 | −1 | −150 | −6 | 1 | 45 | 1 | 45 | 70 | F-66 |

**Pin Configurations are 1. Emitter, 2. Base, 3. Collector, 4. Shield, unless otherwise specified. (Outline Dimensions: mm)**

| TYPE NO. | USES | MATERIAL STRUCTURE | $V_{CBO}$ (V) | $V_{EBO}$ (V) | $I_C$ (mA) | Pd (mW) | Tj (°C) | $I_{CBO}$ (uA) | VALUE OF DC/PULSE | | | | BIAS | | hfe hfb* | fab fT (Mc) | Cob (pF) | $r_{bb'}$ $h_{ie(real)}$* (Ω) | CASE STYLE |
|---|---|---|---|---|---|---|---|---|---|---|---|---|---|---|---|---|---|---|---|
| | | | | | | | | | $V_{CB}$(V) | hFE | $V_{CE}$(V) | $I_C$(mA) | $V_{CB}$(V) | $I_e$(mA) | | | | | |
| 2SB 68 | SW | Ge.A | −105 | −50 | −100 | 50 | 85 | −14 | −2.5 | 60 | −0.35 | −5 | | | | | | | F-84A |
| 2SB 69 | PA | Ge.D | −60 | −1 | −6A | 25W (Tc = 25°C) | 75 | −330 | −12 | 70 | −1.5 | −1A | −1.5 | 500 | | 1 | | | F-102 |
| 2SB 70 | AF | Ge.A | −30 | −10 | −10 | 125 | 75 | −12 | −10 | | | | −2 | 0.5 | 30 | *fae* = 15kc | | | F-20 |
| 2SB 71 | " | " | −30 | −10 | −10 | 125 | 75 | −12 | −10 | | | | −2 | 3 | 50 | *fae* = 15kc | | | F-20 |
| 2SB 73 | LN | " | −10 | −10 | −2 | 20 | 85 | −7 | −10 | | | | −4 | 0.5 | 65 | | NF < 6dB (*f* = 1kc) | | F-12A |
| 2SB 74 | AF | " | −16 | −0.5 | −15 | 80 | 85 | −6 | −12 | | | | −6 | 1 | 48 | | | | F-12A |
| 2SB 75 | " | " | −25 | −12 | −100 | 150 | 85 | −14 | −30 | 65 | −1.5 | −50 | −6 | 1 | 55 | 2 | | | F-12A |
| 2SB 75A | " | " | −45 | −12 | −100 | 150 | 85 | −25 | −45 | 65 | −1.5 | −50 | −6 | 1 | 55 | 2 | | | F-12A |
| 2SB 76 | " | " | −12 | −2.5 | −100 | 150 | 85 | −14 | −12 | 65 | −1.5 | −50 | −6 | 1 | 55 | 2 | | | F-12A |
| 2SB 77 | PA | " | −25 | −12 | −100 | 150 | 85 | −14 | −25 | 85 | −1 | −50 | −6 | 1 | 70 | 2 | | | F-12C |
| 2SB 77A | " | " | −45 | −12 | −100 | 150 | 85 | −25 | −45 | 85 | −1 | −50 | −6 | 1 | 70 | 2 | | | F-12C |
| 2SB 78 | " | " | −12 | −2.5 | −100 | 150 | 85 | −14 | −12 | 85 | −1.5 | −50 | −6 | 1 | 70 | | | | F-12A |
| 2SB 79 | " | " | −25 | −12 | −150 | 250 | 85 | −16 | −30 | 70 | −1 | −150 | | | | | | | F-70 |
| 2SB 80 | " | " | −25 | −10 | −1A | 4W (Tc = 25°C) | 85 | −100 | −12 | 70 | −1.5 | −0.5A | | | | | | | F-101 |
| 2SB 81 | " | " | −80 | −12 | −0.5A | 2W (Tc = 25°C) | 85 | −50 | −50 | 45 | −2 | −100 | −6 | 100 | 40 | 0.5 | 40 | | F-101 |
| 2SB 82 | " | " | −100 | −12 | −0.5A | 2W (Tc = 25°C) | 85 | −35 | −50 | 40 | −2 | −100 | −6 | 100 | 40 | 0.5 | 40 | | F-101 |
| 2SB 83 | " | " | −40 | −10 | −3A | 11W (Tc = 80°C) | 91 | −3mA | −40 | 70 | −1.5 | −0.7A | | | | | | | F-103 |
| 2SB 84 | " | " | −60 | −10 | −3A | 11W (Tc = 80°C) | 91 | −3mA | −60 | 70 | −1.5 | −0.7A | | | | | | | F-103 |
| 2SB 85 | " | " | −40 | −20 | −10A | 50W (Tc = 25°C) | 91 | −3mA | −40 | 30 | −1.5 | −4A | | | | | | | F-103 |
| 2SB 86 | " | " | −60 | −20 | −10A | 50W (Tc = 25°C) | 91 | −3mA | −60 | 30 | −1.5 | −4A | | | | | | | F-103 |
| 2SB 87 | " | " | −80 | −60 | −10A | 50W (Tc = 25°C) | 91 | −3mA | −80 | 30 | −1.5 | −4A | | | | | | | F-103 |
| 2SB 88 | " | " | −100 | −60 | −10A | 50W (Tc = 25°C) | 91 | −3mA | −100 | 30 | −1.5 | −4A | | | | | | | F-103 |
| 2SB 89 | " | " | −25 | −12 | −150 | 250 | 85 | −16 | −25 | 70 | −1 | −150 | −6 | 1 | 55 | | | | F-71A |
| 2SB 89A | " | " | −45 | −12 | −150 | 250 | 85 | −50 | −45 | 70 | −1 | −150 | −6 | 1 | 55 | | | | F-71A |
| 2SB 90 | AF | " | −18 | −12 | −5 | 40 | 75 | −14 | −18 | | | | −6 | 1 | 70 | >1 | 12 | | F-5 |
| 2SB 91 | PA | " | −18 | −12 | −30 | 40 | 75 | −14 | −18 | 70 | −1 | −30 | −6 | 1 | | >1 | | | F-5 |
| 2SB 92 | " | " | −32 | −10 | −125 | 125 | 75 | −12 | −10 | 50 | −1 | | −6 | 10 | | 0.35 | | | F-16 |
| 2SB 93 | AF | " | −30 | | −10 | 125 | 75 | −12 | −20 | | | | −2 | 3 | 90 | | | | F-20 |
| 2SB 94 | PA | " | −25 | −12 | −50 | 150 | 75 | −14 | −25 | 80 | −1 | −50 | −6 | 1 | | 1 | 35 | | F-12A |
| 2SB 95 | " | " | −25 | −12 | −50 | 150 | 75 | −14 | −30 | 60 | −1 | −50 | | | | | | | F-12A |
| 2SB 96 | PA | Ge.A | −32 | −10 | −125 | 125 | 75 | −12 | −10 | 80 | −1 | | | | | | | | F-16 |
| 2SB 97 | LN | " | −18 | −12 | −5 | 40 | 75 | −14 | −30 | | | | −6 | 1 | 70 | | | | F-5 |
| 2SB 98 | AF | " | −30 | | −50 | 125 | 75 | −20 | −6 | 35 | −1 | −50 | −6 | 1 | 40 | 1 | 35 | | F-84A |
| 2SB 99 | AF | " | −30 | | −50 | 125 | 75 | −20 | −6 | 130 | −1 | −50 | −6 | 1 | 120 | 1.5 | 35 | | F-84A |
| 2SB 100 | LN | " | −30 | −10 | −50 | 100 | 75 | −10 | −30 | | | | −6 | 1 | 60 | 1.2 | | | F-84A |
| 2SB 101 | AF.PA | " | −30 | −10 | −50 | 125 | 75 | −10 | −30 | | | | −6 | 1 | 60 | 1.2 | 35 | | F-84A |
| 2SB 102 | " | " | −30 | −10 | −50 | 180 | 75 | −10 | −30 | | | | −6 | 1 | 60 | 1.2 | 35 | | F-91 |
| 2SB 103 | " | " | −30 | −10 | −100 | 125 | 75 | −10 | −30 | 70 | −1 | −50 | −6 | 1 | | 1.2 | | | F-84A |
| 2SB 104 | " | " | −30 | −10 | −100 | 180 | 75 | −10 | −30 | 70 | −1 | −50 | −6 | 1 | | 1.2 | | | F-91 |
| 2SB 105 | " | " | −30 | −10 | −500 | 500 | 75 | −100 | −30 | 70 | −2 | −200 | | 0.5 | | | | | F-81 |
| 2SB 106 | " | " | −30 | −10 | −500 | 3W | 75 | −100 | −30 | 70 | −2 | −200 | −2 | 200 | | 0.5 | | | F-95 |
| 2SB 107 | " | " | −30 | | −2A | 10W (Tc = 25°C) | 75 | −50 | −30 | 70 | −2 | −1A | −2 | 200 | | 0.4 | | | F-102 |
| 2SB 107A | " | " | −60 | | −3A | 20W (Tc = 25°C) | 75 | −500 | −600 | 70 | −2 | −1A | −2 | 200 | | 0.4 | | | F-102 |
| 2SB 108 | PA | " | −40 | −10 | −500 | 500 | 75 | −100 | −40 | 70 | −2 | −200 | −2 | 200 | | 0.5 | | | F-81 |
| 2SB 108A | " | " | −60 | −10 | −500 | 500 | 75 | −100 | −60 | 70 | −2 | −200 | −2 | 200 | | 0.5 | | | F-81 |
| 2SB 108B | " | " | −80 | −10 | −500 | 500 | 75 | −100 | −80 | 70 | −2 | −200 | −2 | 200 | | 0.5 | | | F-81 |
| 2SB 109 | " | " | −40 | −10 | −500 | 3W | 75 | −100 | −40 | 70 | −2 | −200 | −2 | 200 | | 0.5 | | | F-95 |
| 2SB 109A | " | " | −60 | −10 | −500 | 3W | 75 | −100 | −60 | 70 | −2 | −200 | −2 | 200 | | 0.5 | | | F-95 |
| 2SB 109B | " | " | −80 | −10 | −500 | 3W | 75 | −100 | −80 | 70 | −2 | −200 | −2 | 200 | | 0.5 | | | F-95 |
| 2SB 110 | AF | " | −25 | −10 | −50 | 100 | 85 | −10 | −6 | | | | −6 | 1 | 30 | 1 | | | F-19A |
| 2SB 111 | " | " | −25 | −10 | −50 | 100 | 85 | −10 | −6 | | | | −6 | 1 | 45 | 1 | | | F-19A |
| 2SB 112 | " | " | −25 | −10 | −50 | 100 | 85 | −10 | −6 | | | | −6 | 1 | 60 | 1 | | | F-19A |
| 2SB 113 | " | " | −25 | −10 | −50 | 100 | 85 | −10 | −6 | | | | −6 | 1 | 80 | 1 | | | F-19A |
| 2SB 114 | PA | " | −25 | −10 | −50 | 100 | 85 | −10 | −6 | 65 | −1 | −20 | −6 | 1 | | 1.5 | | | F-19A |
| 2SB 115 | " | " | −25 | −10 | −50 | 100 | 85 | −10 | −6 | 85 | −1 | −20 | −6 | 1 | | 1.5 | | | F-19A |
| 2SA 116 | " | " | −25 | −10 | −50 | 100 | 85 | −10 | −6 | 110 | −1 | −20 | −6 | 1 | | 1.5 | | | F-19A |
| 2SB 117 | " | " | −25 | −10 | −50 | 100 | 85 | −10 | −6 | 140 | −1 | −20 | −6 | 1 | | 1.5 | | | F-19A |
| 2SB 118 | " | " | −15 | −10 | −1.5A | 50W (Tc = 25°C) | 75 | −100 | −14 | 60 | −7 | −0.3A | −7 | 300 | | 0.2 | | | F-102 |
| 2SB 119 | " | " | −32 | −10 | −1.5A | 50W (Tc = 25°C) | 75 | −100 | −14 | 60 | −7 | −0.3A | −7 | 300 | | 0.2 | | | F-102 |
| 2SB 120 | AF | " | −32 | −2.5 | −20 | 150 | 85 | −6.5 | −12 | | | | −12 | 2 | 70 | | | | F-12A |

**Pin Configurations are 1. Emitter, 2. Base, 3. Collector, 4. Shield, unless otherwise specified. (Outline Dimensions: mm)**

| TYPE NO. | USES | MATERIAL STRUCTURE | $V_{CBO}$ (V) | $V_{EBO}$ (V) | $I_C$ (mA) | $P_d$ (mW) | $T_j$ (°C) | $I_{CBO}$ (uA) | VALUE OF DC/PULSE BIAS $V_{CB}$(V) | $h_{FE}$ | $V_{CE}$(V) | $I_C$(mA) | BIAS $V_{CB}$(V) | BIAS $I_e$(mA) | hfe hfb* | fab fT (Mc) | Cob (pF) | $r_{bb'}$ $h_{ie(real)}$* (Ω) | CASE STYLE |
|---|---|---|---|---|---|---|---|---|---|---|---|---|---|---|---|---|---|---|---|
| 2SB 121 | SW | Ge.A | −105 | −50 | −100 | 50 | 85 | −15 | −2.5 | 60 | −0.35 | −5 | −6 | 1 | | 0.5 | | | F-12A |
| 2SB 122 | " | " | −80 | −40 | −1.5A | 20W (Tc = 25°C) | 75 | −160 | −12 | 60 | −1.5 | −1A | −1.5 | 500 | | 0.25 | | | F-102 |
| 2SB 123 | " | " | −40 | −30 | −5A | 20W (Tc = 25°C) | 75 | −1mA | −40 | | | | | | | 0.25 | <300 | <40 | F-102 |
| 2SB 124 | " | " | −60 | −25 | −15A | 40W (Tc = 25°C) | 75 | -1.2mA | −12 | 70 | −1.5 | −15A | −6 | 500 | | 0.3 | | | F-107 |
| 2SB 125 | " | " | −36 | −25 | −15A | 40W (Tc = 25°C) | 75 | -1.2mA | −12 | 70 | −1.5 | −15A | −6 | 500 | | 0.3 | | | F-107 |
| 2SB 126 | PA | " | −32 | −10 | −3.5A | 30W (Tc = 25°C) | 90 | −220 | −14 | 35 | −1 | −1A | −6 | 1A | | $f_{ae}$ = 6kc | | | F-102 |
| 2SB 127 | " | " | −32 | −10 | −3.5A | 30W (Tc = 25°C) | 90 | −220 | −14 | 75 | −1 | −1A | −6 | 1A | | $f_{ae}$ = 6kc | | | F-102 |
| 2SB 128 | " | " | −80 | −40 | −6A | 30W (Tc = 25°C) | 90 | −220 | −14 | 40 | −1 | −1A | | | | | | | F-102 |
| 2SB 128A | " | " | −120 | −60 | −6A | 54W (Tc = 25°C) | 90 | −200 | −14 | 50 | −1 | −1A | | | | | | | F-102 |
| 2SB 129 | " | " | −80 | −40 | −6A | 54W (Tc = 25°C) | 90 | −200 | −14 | 85 | −1 | −1A | | | | | | | F-102 |
| 2SB 129A | " | " | −120 | −60 | −6A | 54W (Tc = 25°C) | 90 | −200 | −14 | 85 | −1 | −1A | | | | | | | F-102 |
| 2SB 130 | " | " | −32 | −10 | −1.5A | 6.5W (Tc = 25°C) | 75 | −200 | −14 | 60 | −7 | −0.3 | −7 | 300 | | 0.2 | | | F-100 |
| 2SB 131 | " | " | −40 | −12 | −1.5A | 65W (Tc = 25°C) | 90 | −2mA | −30 | 65 | −1.5 | −1A | −14.4 | 50 | | $f_{ae}$ = 5kc | | | F-102 |
| 2SB 131A | " | " | −40 | −12 | −1.5A | 65W (Tc = 25°C) | 90 | −2mA | −30 | 65 | −1.5 | −1A | | | | $f_{ae}$ = 5kc | | | F-102 |
| 2SB 132 | " | " | −60 | −12 | −1.5A | 65W (Tc = 25°C) | 90 | −2mA | −30 | 65 | −1.5 | −1A | −14.4 | 50 | | $f_{ae}$ = 5kc | | | F-102 |
| 2SB 134 | AF.LN | " | −30 | −15 | −100 | 100 | 85 | −10 | −25 | | | | −6 | 1 | 70 | NF = 4dB ($f$ = 1kHz, $I_C$ = 0.5mA) | | | F-12B |
| 2SB 135 | AF | " | −30 | −15 | −100 | 100 | 85 | −10 | −25 | | | | −6 | 1 | 70 | | | | F-12B |
| 2Sb 136 | PA | " | −25 | −12 | −150 | 150 | 85 | −10 | −25 | 120 | −1.5 | −50 | | | | | | | F-12B |
| 2SB 137 | " | " | −30 | −15 | −5A | 30W (Tc = 25°C) | 85 | −500 | −20 | 80 | −1.5 | −1A | | | | | | | F-103 |
| 2SB 138 | " | " | −60 | −30 | −5A | 30W (Tc = 25°C) | 85 | −500 | −30 | 80 | −1.5 | −1A | | | | | | | F-103 |
| 2SB 140 | " | " | −40 | −12 | −1.5A | 12W (Tc = 25°C) | 85 | −600 | −40 | 74 | −1.5 | −1A | | | | $f_{ae}$ = 7kc | 200 | | F-103 |
| 2SB 141 | " | " | −60 | −12 | −1.5A | 12W (Tc = 25°C) | 85 | −600 | −60 | 74 | −1.5 | −1A | | | | $f_{ae}$ = 7kc | 200 | | F-103 |
| 2SB 142 | " | " | −30 | −12 | −1A | 10W (Tc = 25°C) | 85 | −1mA | −30 | 24 | −1.5 | −1A | | | | $f_{ae}$ = 7kc | 200 | | F-103 |
| 2SB 143 | " | " | −30 | −12 | −1A | 10W (Tc = 25°C) | 85 | −1mA | −30 | 37 | −1.5 | −1A | | | | $f_{ae}$ = 7kc | 200 | | F-103 |
| 2SB 144 | " | " | −30 | −12 | −1A | 10W (Tc = 25°C) | 85 | −1mA | −30 | 75 | −1.5 | −1A | | | | $f_{ae}$ = 7kc | 200 | | F-103 |
| 2SB 145 | " | " | −30 | −12 | −1A | 10W (Tc = 25°C) | 85 | −1mA | −30 | 37 | −1.5 | 1A | | | | $f_{ae}$ = 7kc | 200 | | F-103 |
| 2SB 146 | " | " | −30 | −12 | −1A | 10W (Tc = 25°C) | 85 | −1mA | −30 | 75 | −1.5 | −1A | | | | $f_{ae}$ = 7kc | 200 | | F-103 |
| 2SB 147 | " | " | −60 | −12 | −1.5A | 12W (Tc = 25°C) | 85 | −600 | −50 | 60 | −1.5 | −200 | | | | $f_{ae}$ = 7kc | 200 | | F-103 |
| 2SB 148 | SW | " | −80 | −25 | −15A | 40W (Tc = 25°C) | 75 | -1.2mA | −12 | 70 | −1.5 | −15A | −6 | 0.5A | | 0.3 | | | F-107 |
| 2SB 149 | " | " | −40 | −30 | −8A | 25W (Tc = 25°C) | 5 | −230 | −12 | 60 | −1.5 | −8A | −1.5 | 0.5A | | 0.25 | <400 | <30 | F-102 |
| 2SB 150 | SW | Ge.A | −105 | −50 | −40 | 50 | 75 | −50 | −105 | 35 | −0.35 | −5 | −6 | 1 | | 0.5 | <20 | <370 | F-12A |
| 2SB 151 | " | " | −80 | −60 | −5A | 50w (Tc = 25°C) | 100 | −500 | −30 | 40 | −1.5 | −3A | −1.5 | 1A | | $f_{ae}$ = 5kc | | | F-102 |
| 2SB 152 | " | " | −100 | −60 | −5A | 50W (Tc = 25°C) | 100 | −500 | −30 | 40 | −1.5 | −3A | −1.5 | 1A | | $f_{ae}$ = 5kc | | | F-102 |
| 2SB 152A | " | " | −100 | −60 | −5A | 50W (Tc = 25°C) | 100 | −3mA | −100 | 70 | −1 | −1A | | | | $f_{ae}$ > 4.5kc | | | F-102 |
| 2SB 153 | AF | " | −12 | −2.5 | −70 | 150 | 85 | −14 | −12 | | | | −3 | 1 | 70 | | | | F-12A |
| 2SB 154 | PA | " | −12 | −2.5 | −70 | 150 | 85 | −14 | −12 | 70 | −1.5 | −50 | | | | | | | F-12A |
| 2SB 155 | AF | " | −16 | −2.5 | −300 | 150 | 85 | −14 | −12 | | | | −4 | 1 | 30 | 1.4 | | | F-12A |
| 2SB 156 | PA | " | −16 | −2.5 | −300 | 150 | 85 | −14 | −12 | 70 | −1 | −150 | −4 | 1 | 45 | | | | F-12A |
| 2SB 156A | " | " | −20 | −6 | −300 | 150 | 85 | −14 | −20 | 70 | −1 | −150 | −4 | 1 | 45 | | | | F-12A |
| 2SB 157 | AF | " | −7 | −7 | −5 | 10 | 55 | −10 | −2 | | | | −0.5 | 0.25 | 35 | $f_{ae}$ > 10kc | | | F-2A |
| ²2SB 158 | " | " | −7 | −7 | −5 | 10 | 55 | −10 | −2 | | | | −0.5 | 0.25 | 55 | $f_{ae}$ > 10kc | | | F-2A |
| 2SB 159 | AF | " | −7 | −7 | −5 | 10 | 55 | −10 | −2 | | | | −0.5 | 0.25 | 80 | $f_{ae}$ > 10kc | | | F-2A |
| 2SB 160 | PA | " | −7 | −7 | −5 | 10 | 55 | −10 | −2 | 75 | −2 | −0.5 | | | | | | | F-2A |
| 2SB 161 | " | " | −30 | | −100 | 125 | 75 | −10 | −6 | 50 | −1 | −50 | −6 | 1 | | 0.65 | | | F-84A |
| 2SB 162 | " | " | −30 | | −100 | 180 | 75 | −10 | −6 | 50 | −1 | −50 | −6 | 1 | | 0.65 | | | F-91 |
| 2SB 163 | " | " | −30 | | −100 | 125 | 75 | −10 | −6 | 70 | −1 | −50 | −6 | 1 | | 0.8 | | | F-84A |
| 2SB 164 | " | " | −30 | | −100 | 180 | 75 | −10 | −6 | 70 | −1 | −50 | −6 | 1 | | 0.8 | | | F-91 |
| 2SB 165 | " | " | −30 | | −100 | 125 | 75 | −10 | −6 | 100 | −1 | −50 | −6 | 1 | | 1 | | | F-84B |
| 2SB 166 | " | " | −30 | | −100 | 180 | 75 | −10 | −6 | 100 | −1 | −50 | −6 | 1 | | | | | F-91 |
| 2SB 168 | AF | " | −9 | −2.5 | −100 | 150 | 85 | −14 | −9 | | | | −3 | 1 | 60 | 0.8 | | | F-12A |
| 2SB 169 | PA | " | −9 | −2.5 | −100 | 150 | 85 | −14 | −9 | 80 | −1 | −50 | −3 | 1 | | | | | F-12A |
| 2SB 170 | AF | " | −30 | −10 | −100 | 125 | 85 | −12 | −10 | | | | −6 | 1 | 30 | | | | F-12B |
| 2SB 171 | " | " | −30 | −10 | −100 | 125 | 85 | −12 | −10 | | | | −6 | 1 | 60 | | | | F-12B |
| 2SB 172 | PA | " | −32 | −10 | −125 | 125 | 85 | −12 | −10 | 50 | −1 | $I_B$ = −2mA | −6 | 10 | | 0.35 | | | F-12B |
| 2SB 173 | LN | " | −30 | −10 | −100 | 125 | 85 | −12 | −10 | | | | −6 | 1 | 100 | | | | F-4 |
| 2SB 174 | PA | " | −20 | −6 | −300 | 225 | 75 | −20 | −12 | 65 | −0.5 | −300 | −6 | 50 | | 1.5 | | | F-12B |
| 2SB 175 | AF | " | −30 | −10 | −100 | 125 | 85 | −12 | −10 | | | | −6 | 1 | 100 | | | | F-12B |
| 2SB 176 | PA | " | −32 | −10 | −125 | 125 | 85 | −12 | −10 | 90 | −1 | $I_B$ = −2mA | | | | | | | F-12B |
| 2SB 177 | " | " | −60 | −10 | −125 | 125 | 85 | −12 | −10 | 90 | −1 | $I_B$ = −2mA | | | | | | | F-12B |
| 2SB 178 | " | " | −20 | −6 | −300 | 225 | 85 | −20 | −12 | 56 | $V_{CB}$ = 0V | −300 | | | | | | | F-17 |

Pin Configurations are 1. Emitter, 2. Base, 3. Collector, 4. Shield, unless otherwise specified. (Outline Dimensions: mm)

| TYPE NO. | USES | MATERIAL STRUCTURE | $V_{CBO}$ (V) | $V_{EBO}$ (V) | $I_C$ (mA) | Pd (mW) | Tj (°C) | $I_{CBO}$ (uA) | VALUE OF DC/PULSE | | | BIAS | | hfe hfb* | fab fT (Mc) | Cob (pF) | $r_{bb'}$ $h_{ie(real)}$* (Ω) | CASE STYLE |
|---|---|---|---|---|---|---|---|---|---|---|---|---|---|---|---|---|---|---|
| | | | | | | | | | $V_{CE}$(V) | hFE | $V_{CE}$(V) | $I_C$(mA) | $V_{CB}$(V) | $I_e$(mA) | | | | |
| 2SB 178A | PA | Ge.A | −40 | −6 | −320 | 225 | 85 | −20 | −12 | 56 | VCB = 0V | −300 | | | | | | F-17 |
| 2SB 179 | AF | " | −25 | −12 | −50 | 80 | 75 | −14 | −30 | | | | −6 | 1 | 50 | | | | F-12A |
| 2SB 180 | PA | " | −40 | −12 | −0.5 | 5.5* Tc = 25°C | 92 | −1mA | −40 | 70 | −1.5 | −500 | −12 | 15 | | | | | F-83 |
| 2SB 180A | " | " | −40 | −12 | −0.5A | 12W Tc = 25°C | 90 | −500 | −30 | 70 | −1.5 | −500 | | | | fae = 13kc | | | F-83 |
| 2SB 181 | " | " | −60 | −12 | −0.5A | 5.5W Tc = 25°C | 92 | −1mA | −60 | 70 | −1.5 | −500 | −12 | 15 | | | | | F-83 |
| 2SB 181A | " | " | −60 | −12 | −0.5A | 12W Tc = 25°C | 90 | −200 | −30 | 70 | 1.5 | −500 | | | | fae = 13kc | | | F-83 |
| 2SB 183 | AF | " | −12 | −2.5 | −20 | 50 | 85 | −12 | −12 | | | | −0.5 | 0.25 | 55 | | | | F-3 |
| 2SB 184 | PA | " | −12 | −2.5 | −20 | 50 | 85 | −12 | −12 | 100 | −2 | −5 | | | | | | | F-3 |
| 2SB 185 | " | " | −25 | −12 | −150 | 200 | 85 | −15 | −20 | | | | −6 | 1 | 45 | 1 | | | F-12A |
| 2SB 186 | " | " | −25 | −12 | −150 | 200 | 85 | −15 | −20 | | | | −6 | 1 | 120 | 1 | 25 | | F-12A |
| 2SB 187 | " | " | −25 | −12 | −150 | 200 | 85 | −15 | −20 | | | | −6 | 1 | | 1 | | | F-12A |
| 2SB 188 | " | " | −25 | −12 | −150 | 200 | 85 | −15 | −20 | | | | −6 | 1 | 20 | 1 | | | F-12A |
| 2SB 189 | " | " | −25 | −12 | −250 | 250 | 75 | −14 | −25 | 75 | −1 | −100 | −6 | 1 | | 1 | | | F-62 |
| 2SB 190 | AF | " | −25 | −12 | −50 | 90 | 80 | −15 | −25 | | | | −6 | 1 | 150 | | | | F-12A |
| 2SB 191 | " | " | −25 | −12 | −50 | 90 | 80 | −15 | −25 | | | | −6 | 1 | 70 | | | | F-12A |
| 2SB 192 | " | " | −25 | −12 | −50 | 90 | 80 | −15 | −25 | | | | −6 | 1 | 35 | | | | F-12A |
| 2SB 193 | " | " | −25 | −12 | −100 | 200 | 80 | −15 | −25 | | | | −6 | 1 | 150 | | | | F-75 |
| 2SB 194 | " | " | −25 | −12 | −100 | 200 | 80 | −15 | −25 | | | | −6 | 1 | 70 | | | | F-75 |
| 2SB 195 | " | " | −25 | −12 | −100 | 200 | 80 | −15 | −25 | | | | −6 | 1 | 35 | | | | F-75 |
| 2SB 196 | " | " | −30 | −12 | −500 | 500 | 80 | −100 | −30 | 50 | −2 | −200 | | | | | | | F-82 |
| 2SB 197 | " | " | −50 | −12 | −500 | 500 | 80 | −100 | −50 | 50 | −2 | −200 | | | | | | | F-82 |
| 2SB | " | " | −70 | −12 | −500 | 500 | 80 | −100 | −70 | 50 | −2 | −200 | | | | | | | F-82 |
| 2SB 199 | PA | " | −12 | −2.5 | −300 | 250 | 85 | −14 | −12 | 80 | −1 | −150 | −3 | 1 | | | | | F-71A |
| 2SB 200 | " | " | −32 | −12 | −400 | 225 | 75 | −40 | −12 | 75 | −1 | −150 | −1 | 100 | | 0.5 | | | F-77 |
| 2SB 201 | SW | " | −35 | −12 | −400 | 300 | 75 | −30 | −12 | 150 | −1 | −150 | −1 | 100 | | 0.5 | | | F-84A |
| 2SB 202 | PA | " | −32 | −12 | −400 | 225 | 75 | −40 | −12 | 140 | −1 | −150 | −1 | 100 | | 0.5 | | | F-77 |
| 2SB 203 | " | " | −40 | −40 | −20A | 80W Tc = 25°C | 85 | −5mA | −40 | 40 | −1.5 | −15A | | | | | | | F-105 |
| 2SB 204 | " | " | −40 | −40 | −30A | 80W Tc = 25°C | 85 | −5mA | −40 | 100 | −1.5 | −15A | | | | | | | F-105 |
| 2SB 205 | " | " | −80 | −40 | −20A | 80W Tc = 25°C | 85 | −5mA | −80 | 40 | −1.5 | −15A | −6 | 2A | | fae = 2.5kc | | | F-105 |
| 2SB 206 | " | " | −80 | −40 | −30A | 80W Tc = 25°C | 85 | −5mA | −80 | 100 | −1.5 | −15A | −6 | 2A | | fae = 2.5kc | | | F-105 |
| 2SB 207 | PA | Ge.A | −100 | −40 | −20A | 80W Tc = 25°C | 85 | −5mA | −100 | 40 | −1.5 | −15A | | | | | | | F-105 |
| 2SB 208 | " | " | −100 | −40 | −30A | 80W Tc = 25°C | 85 | −5mA | −100 | 100 | −1.5 | −15A | | | | | | | F-105 |
| 2SB 209 | " | " | −40 | −40 | −20A | 80W Tc = 25°C | 85 | −5mA | −40 | 40 | −1.5 | −15A | −6 | 2A | | fae = 2.5kc | | | F-105 |
| 2SB 210 | SW | " | −40 | −40 | −30A | 80W Tc = 25°C | 85 | −5mA | -40 | 100 | −1.5 | −15A | −6 | 2A | | fae = 2.5kc | | | F-105 |
| 2SB 211 | " | " | −80 | −40 | −20A | 80W Tc = 25°C | 85 | −5mA | −80 | 40 | −1.5 | −15A | −6 | 2A | | fae = 2.5kc | | | F-105 |
| 2SB 212 | " | " | −80 | −40 | −30A | 80W Tc = 25°C | 85 | −5mA | −80 | 100 | −1.5 | −15A | −6 | 2A | | fae = 2.5kc | | | F-105 |
| 2SB 213 | " | " | −100 | −40 | −20A | 80W Tc = 25°C | 85 | −5mA | −100 | 40 | −1.5 | −15A | −6 | 2A | | fae = 2.5kc | | | F-105 |
| 2SB 214 | " | " | −100 | −40 | −30A | 80W Tc = 25°C | 85 | −5mA | −100 | 100 | −1.5 | −15A | −6 | 2A | | fae = 2.5kc | | | F-105 |
| 2SB 215 | " | " | −100 | −20 | −3A | 24W Tc = 25°C | 85 | −500 | −12 | 100 | −1.5 | −1A | −3 | 100 | | < 0.15 | < 400 | < 50 | F-102 |
| 2SB 216 | PA | " | −60 | −10 | −3A | 24W Tc = 25°C | 85 | −500 | −12 | 80 | −1.5 | −200 | −1.5 | 200 | | 0.25 | | | F-102 |
| 2SB 217 | PA | " | −25 | −10 | −3A | 24W Tc = 25°C | 85 | −500 | −12 | 80 | −1.5 | −1A | −1.5 | 200 | | 0.5 | | | F-102 |
| 2SB 218 | SW | " | −80 | −20 | −100 | 225 | 85 | −10 | −50 | 50 | −1 | −100 | −5 | 1 | | 2.5 | < 30 | < 200 | F-84A |
| 2SB 219 | PA | " | −30 | −10 | −200 | 225 | 85 | −16 | −25 | 31 | −1 | −20 | −6 | 1 | | 1.5 | 25 | | F-84B |
| 2SB 219A | " | " | −30 | −10 | −500 | 225 | 85 | −16 | −25 | 31 | −1 | −20 | −5 | 1 | | 1.5 | | | F-84A |
| 2SB 220 | " | " | −30 | −10 | −200 | 225 | 85 | −16 | −25 | 50 | −1 | −20 | −6 | 1 | | 2 | 25 | | F-84A |
| F-220A | " | " | −30 | −10 | −500 | 225 | 85 | −16 | −25 | 50 | −1 | −20 | −5 | 1 | 2 | | | | F-84A |
| 2SB 221 | " | " | −30 | −10 | −200 | 225 | 85 | −16 | −25 | 72 | −1 | −20 | −6 | 1 | | 2 | 25 | | F-84A |
| 2SB 221A | " | " | −30 | −10 | −500 | 225 | 85 | −16 | −25 | 72 | −1 | −20 | −5 | 1 | | 2.5 | | | F-84A |
| 2SB 222 | " | " | −30 | −10 | −200 | 225 | 85 | −16 | −25 | 97 | −1 | −20 | −6 | 1 | | 2.5 | 25 | | F-84A |
| 2SB 222A | " | " | −30 | −10 | −500 | 225 | 85 | −16 | −25 | 97 | −1 | −20 | −5 | 1 | | 2.8 | | | F-84A |
| 2SB 223 | " | " | −30 | −10 | −200 | 255 | 85 | −16 | −25 | 150 | −1 | −20 | −6 | 1 | | 3.0 | 25 | | F-84A |
| 2SB 223A | PA | Ge.A | −30 | −10 | −500 | 225 | 85 | −16 | −25 | 150 | −1 | −20 | −5 | 1 | | 3 | | | F-84A |
| 2SB 224 | " | " | −45 | −15 | −500 | 225 | 85 | −10 | −30 | 35 | −1 | −20 | −5 | 1 | 30 | 2 | 25 | | F-84A |
| 2SB 225 | " | " | −45 | −15 | −500 | 225 | 85 | −10 | −30 | 52 | −1 | −20 | −5 | 1 | 44 | 2.5 | 25 | | F-84A |
| 2SB 226 | " | " | −45 | −15 | −500 | 225 | 85 | −10 | −30 | 73 | −1 | −20 | −5 | 1 | 64 | 3 | 25 | | F-84A |
| 2SB 227 | " | " | −45 | −15 | −500 | 225 | 85 | −10 | −30 | 91 | −1 | −20 | −5 | 1 | 81 | 3.3 | 25 | | F-84A |
| 2SB 228 | " | " | −80 | −50 | −5A | 50W Tc = 25°C | 91 | −5ma | −80 | 28 | −1.5 | −4A | | | | | | | F-103 |
| 2SB 229 | " | " | −100 | −50 | −5A | 50W Tc = 25°C | 91 | −5mA | −100 | 28 | −1.5 | −4A | | | | | | | F-103 |
| 2SB 230 | " | " | −120 | −50 | −5A | 50W Tc = 25°C | 91 | −5mA | −120 | 28 | −1.5 | −4A | | | | | | | F-103 |
| 2SB 231 | SW | Ge.D | −120 | −1 | −6A | 25W Tc = 25°C | 75 | −5mA | −120 | 50 | −1.5 | −5A | | | | | | | F-102 |

**Pin Configurations are 1. Emitter, 2. Base, 3. Collector, 4. Shield, unless otherwise specified. (Outline Dimensions: mm)**

| TYPE NO. | USES | MATERIAL STRUCTURE | $V_{CBO}$ (V) | $V_{EBO}$ (V) | Ic (mA) | Pd (mW) | Tj (°C) | $I_{CBO}$ (uA) | VALUE OF DC/PULSE $V_{CB}$(V) | hFE | $V_{CE}$(V) | $I_C$(mA) | BIAS $V_{CB}$(V) | $I_E$(mA) | hfe hfb* | fab fT (Mc) | Cob (pF) | $r_{bb'}$ $h_{ie}$(real)* (Ω) | CASE STYLE |
|---|---|---|---|---|---|---|---|---|---|---|---|---|---|---|---|---|---|---|---|
| 2SB 232 | PA | Ge.D | −130 | −0.5 | −6A | 54W (Tc = 25°C) | 90 | −220 | −14 | 60 | −1 | −200 | | | | | | | F-102 |
| 2SB 233 | " | " | −130 | −0.5 | −6A | 54W (Tc = 25°C) | 90 | −220 | −14 | 150 | −1 | −200 | | | | | | | F-102 |
| 2SB 234 | SW | " | −180 | −1.3 | −6A | 54W (Tc = 25°C) | 90 | −220 | −14 | 25 | −1 | −6A | | | | | | | F-102 |
| 2SB 235 | " | Ge.A | −80 | −25 | −15A | 60W (Tc = 25°C) | 85 | -1.2mA | −12 | 60 | −2 | −5A | −6 | 0.5A | | 0.3 | | | F-109 |
| 2SB 236 | " | " | −60 | −25 | −15A | 60W (Tc = 25°C) | 85 | -1.2mA | −12 | 60 | −2 | −5A | −6 | 0.5A | | 0.3 | | | F-109 |
| 2SB 237 | " | " | −36 | −25 | −15A | 60W (Tc = 25°C) | 85 | -1.2mA | −12 | 60 | −2 | −5A | −6 | 0.5A | | 0.3 | | | F-109 |
| 2SB 238 | PA | " | −40 | −15 | −1A | 13W (Tc = 25°C) | 90 | −100 | −40 | 60 | −1 | −0.3A | −1 | 200 | | 0.5 | | | F-83 |
| 2SB 239 | SW | " | −80 | −30 | −1A | 13W (Tc = 25°C) | 90 | −100 | −80 | 60 | −1 | −0.3A | −1 | 200 | | 0.5 | | | F-83 |
| 2SB 239A | " | " | −100 | −30 | −1A | 13W (Tc = 25°C) | 90 | −200 | −100 | 60 | −1 | −0.3A | −1 | 200 | | 0.5 | | | F-83 |
| 2SB 240 | PA | " | −40 | −15 | −1A | 13W (Tc = 25°C) | 90 | −200 | −40 | 60 | −1 | −0.3A | −1 | 200 | | 0.5 | | | F-83 |
| 2SB 240A | " | " | −60 | −30 | −1A | 13W (Tc = 25°C) | 90 | −200 | −60 | 60 | −1 | −0.3A | −1 | 200 | | 0.5 | | | F-83 |
| 2SB 241 | SW | " | −80 | −30 | −1A | 13W (Tc = 25°C) | 90 | −200 | −80 | 60 | −1 | −0.3A | −1 | 200 | | 0.5 | | | F-83 |
| 2SB 241A | " | " | −100 | −30 | −1A | 13W (Tc = 25°C) | 90 | −200 | −100 | 60 | −1 | −0.3A | −1 | 200 | | 0.5 | | | F-83 |
| 2SB 242 | PA | " | −30 | −15 | −1A | 13W (Tc = 25°C) | 90 | -1mA | −30 | 40 | −1 | −0.3A | −1 | 200 | | 0.5 | | | F-83 |
| 2SB 242A | " | " | −60 | −20 | −1A | 13W (Tc = 25°C) | 90 | -1mA | −60 | 40 | −1 | −0.3A | −1 | 200 | | 0.5 | | | F-83 |
| 2SB 243 | " | " | −30 | −15 | −1A | 13W (Tc = 25°C) | 90 | −1mA | −30 | 60 | −1 | −0.3A | −1 | 200 | | 0.5 | | | F-83 |
| 2SB 243A | " | " | −60 | −20 | −1A | 13W (Tc = 25°C) | 90 | −1mA | −60 | 60 | −1 | −0.3A | −1 | 200 | | 0.5 | | | F-83 |
| 2SB 244 | SW | " | −80 | −30 | −1A | 13W (Tc = 25°C) | 90 | −1mA | −80 | 40 | −1 | −0.3A | −1 | 200 | | 0.5 | | | F-83 |
| 2SB 245 | " | " | −80 | −30 | −1A | 13W (Tc = 25°C) | 90 | −1mA | −80 | 60 | −1 | −0.3A | −1 | 200 | | 0.5 | | | F-83 |
| 2SB 246 | PA | " | −40 | −20 | −5A | 54W (Tc = 25°C) | 90 | −500 | −40 | 60 | −1.5 | −2A | −1.5 | 200 | | > 0.2 | | | F-102 |
| 2SB 247 | SW | " | −60 | −20 | −5A | 54W (Tc = 25°C) | 90 | −500 | −60 | 60 | −1.5 | −2A | −1.5 | 200 | | >0.2 | | | F-102 |
| 2SB 248 | PA | " | −40 | −20 | −5A | 54W (Tc = 25°C) | 90 | −1mA | −40 | 60 | −1.5 | −2A | −1.5 | 200 | | >0.2 | | | F-102 |
| 2SB 248A | " | " | −60 | −20 | −5A | 54W (Tc = 25°C) | 90 | −1mA | −60 | 60 | −1.5 | −2S | −1.5 | 200 | | >0.2 | | | F-102 |
| 2SB 249 | SW | " | −80 | −40 | −5A | 54W (Tc = 25°C) | 90 | −1mA | −80 | 60 | −1.5 | −2A | −2 | 200 | | >0.2 | | | F-102 |
| 2SB 250 | PA | " | −30 | −20 | −5A | 54W (Tc = 25°C) | 90 | −5mA | −30 | 40 | −1.5 | −2A | −2 | 200 | | 0.35 | | | F-102 |
| 2SB 250A | " | " | −60 | −20 | −5A | 54W (Tc = 25°C) | 90 | −5mA | −60 | 40 | −1.5 | −2A | 2 | 200 | | 0.35 | | | F-102 |
| 2SB 251 | " | " | −30 | −20 | −5A | 54W (Tc = 25°C) | 90 | −5mA | −30 | 60 | −1.5 | −2A | −2 | 200 | | 0.35 | | | F-102 |
| 2SB 251A | " | " | −60 | −20 | −5A | 54W (Tc = 25°C) | 90 | −5mA | −60 | 60 | −1.5 | −2A | −2 | 200 | | 0.35 | | | F-102 |
| 2SB 252 | SW | " | −80 | −40 | −5A | 54W (Tc = 25°C) | 90 | −5mA | −80 | 40 | −1.5 | −2A | −2 | 200 | | 0.35 | | | F-102 |
| 2SB 252A | " | " | −120 | −40 | −5A | 54W (Tc = 25°C) | 90 | −5mA | −120 | 40 | −1.5 | −2A | −2 | 200 | | 0.35 | | | F-102 |
| 2SB 253 | SW | Ge.A | −80 | −40 | −5A | 54W (Tc = 25°C) | 90 | −5mA | −80 | 60 | −1.5 | −2A | −2 | 200 | | | 0.35 | | F-102 |
| 2SB 253A | " | " | −120 | −40 | −5A | 54W (Tc = 25°C) | 90 | −5mA | −120 | 60 | −1.5 | −2A | −2 | 200 | | 0.35 | | | F-102 |
| 2SB 254 | PA | " | −35 | −12 | −1A | 12W (Tc = 25°C) | 85 | −200 | −25 | 100 | −1.5 | −200 | −1.5 | 200 | | 0.7 | | | F-101 |
| 2SB 255 | " | " | −35 | −12 | −1A | 4.8W (Tc = 25°C) | 85 | −500 | −25 | 50 | −1.5 | −200 | −1.5 | 200 | | 0.4 | | | F-101 |
| 2SB 256 | " | " | −25 | −12 | −1A | 12W (Tc = 25°C) | 85 | −200 | −25 | 100 | −1.5 | −200 | −1.5 | 200 | | 0.7 | | | F-101 |
| 2SB 257 | LN | " | −18 | −12 | −5 | 60 | 75 | −3 | −12 | | | | −6 | 1 | 125 | NF = 5dB (VCE = −3V, IE = 0.5mA) | | | F-12A |
| 2SB 258 | PA | Ge.D | −120 | −1 | −15A | 60W (Tc = 25°C) | 75 | -3.5mA | −12 | 60 | −1.5 | −15A | −6 | 500 | | 1.5 | | | F-109 |
| 2SB 259 | " | " | −80 | −1 | −15A | 60W (Tc = 25°C) | 75 | -3.5mA | −12 | 60 | −1.5 | −15A | −6 | 500 | | 1.5 | | | F-109 |
| 2SB 260 | " | " | −50 | −1 | −15A | 60W (Tc = 25°C) | 75 | -3.5mA | −12 | 60 | −1.5 | −15A | −6 | 500 | | 1.5 | | | F-109 |
| 2SB 261 | AF | Ge.A | −20 | −2.5 | −30 | 65 | 85 | −12 | −12 | | | | −6 | 1 | 45 | 2.5 | | | F-4 |
| 2SB 262 | PA | " | −20 | −2.5 | −30 | 65 | 85 | −12 | −12 | 60 | −1.5 | −30 | −6 | 115 | 90 | 3 | | | F-4 |
| 2SB 263 | " | " | −20 | −2.5 | −150 | 200 | 85 | −14 | −12 | 65 | −1 | −150 | −6 | 1 | 60 | 1.5 | | | F-12A |
| 2SB 264 | LN | " | −30 | −10 | −50 | 100 | 75 | −5 | −6 | | | | −1.5 | 0.5 | 70 | NF = 3dB (VCE = 1.5V, IE = 0.5mA) | | | F-19A |
| 2SB 265 | SW | " | −40 | −12 | −100 | 170 | 75 | −10 | −12 | 62 | −1 | −100 | −6 | 1 | | 1.3 | 30 | 140 | F-84A |
| 2SB 266 | AF | " | −25 | | −150 | 150 | 85 | −10 | −12 | | | | −6 | 1 | 67 | | | | F-12A |
| 2SB 267 | PA | " | −25 | | −150 | 150 | 85 | −10 | −12 | 70 | −1 | −150 | | | | | | | F-12A |
| 2SB 268 | " | " | −30 | | −150 | 250 | 85 | −14 | −25 | 75 | −1 | −150 | | | | | | | F-71A |
| 2SB 269 | LN | " | −25 | | −150 | 150 | 85 | −10 | −15 | | | | −6 | 1 | 67 | NF = 4dB (VCE = −2V, IE = 0.5mA) | | | F-12A |
| 2SB 270 | AF | " | −12 | −5 | | 150 | 85 | −15 | −6 | | | | −6 | 1 | 80 | | | | F-12A |
| 2SB 271 | PA | " | −25 | −10 | −500 | 720 (Tc = 25°C) | 85 | −60 | −12 | 80 | −1.5 | −0.1A | −1.5 | 100 | | 0.5 | | | F-12A |
| 2SB 272 | " | " | −25 | −10 | −500 | 720 | 85 | −60 | −12 | 100 | −6 | −0.1A | −1.5 | 100 | | 0.8 | | | F-12A |
| 2SB 273 | " | " | −35 | −10 | −500 | 720 | 85 | −60 | −12 | 100 | −6 | −0.1A | −1.5 | 100 | | 0.8 | | | F-12A |
| 2SB 274 | " | Ge.D | −80 | −1.5 | −6A | 50W | 91 | −5mA | −80 | 30 | −1.5 | −4A | −1.5 | 500 | | 1 | | 3.5 | F-103 |
| 2SB 275 | SW | " | −120 | −1.5 | −6A | 50W | 91 | −5mA | −120 | 40 | −1.5 | −4A | −1.5 | 500 | | 1 | | 3.5 | F-103 |
| 2SB 276 | " | " | −120 | −1.5 | −10A | 50W | 91 | −5mA | −120 | 35 | −1.2 | −10A | −1.5 | 500 | | 1 | | 3.5 | F-103 |
| 2SB 277 | LN | " | −15 | | −5 | 80 | 75 | −12 | −2 | | | | −6 | 1 | 100 | NF = 5dB | | | F-20 |
| 2SB 278 | AF | Si.A | −25 | −20 | −50 | 250 | 150 | −0.1 | −10 | | | | −6 | 1 | 28 | 1 | | | F-16 |
| 2SB 279 | " | " | −25 | −20 | −50 | 250 | 150 | −0.1 | −10 | | | | −6 | 1 | 50 | 1 | | | F-16 |
| 2SB 280 | " | " | −32 | −12 | −250 | 300 | 150 | −0.1 | −10 | 24 | −2 | −30 | −6 | 1 | 25 | 1.5* | | | F-16 |
| 2SB 281 | " | " | −60 | −12 | −250 | 300 | 150 | −0.1 | −10 | 24 | −2 | −30 | −6 | 1 | 40 | 1.5* | | | F-16 |

**Pin Configurations are 1. Emitter, 2. Base, 3. Collector, 4. Shield, unless otherwise specified. (Outline Dimensions: mm)**

| TYPE NO. | USES | MATERIAL STRUCTURE | $V_{CBO}$ (V) | $V_{EBO}$ (V) | $I_C$ (mA) | Pd (mW) | Tj (°C) | $I_{CBO}$ (uA) | VALUE OF DC/PULSE | | | BIAS | | hfe hfb* | fab fT (Mc) | Cob (pF) | $r_{bb'}$ $h_{ie(real)}$* (Ω) | CASE STYLE |
|---|---|---|---|---|---|---|---|---|---|---|---|---|---|---|---|---|---|---|
| | | | | | | | | $V_{CB}$(V) | hFE | $V_{CE}$(V), | $I_C$(mA) | $V_{CB}$(V) | $I_e$(mA) | | | | | |
| 2SB 282 | SW | Ge.A | −80 | −40 | −6A | 30W (Tc = 25°C) | 90 | −100 | −0.5 | 21 | −1 | −6A | −6 | 1A | | 0.25 | 160 | | F-103 |
| 2SB 283 | " | " | −60 | −20 | −6A | 30W (Tc = 25°C) | 90 | −100 | −0.5 | 53 | −1 | −A | −6 | 1A | | 0.25 | 160 | | F-103 |
| 2SB 284 | " | " | −60 | −20 | -6A | 30W (Tc = 25°C) | 90 | −100 | −0.5 | 30 | −1 | −6A | −6 | 1A | | 0.25 | 160 | | F-103 |
| 2SB 285 | " | " | −80 | −40 | −6A | 30W (Tc = 25°C) | 90 | −100 | −0.5 | 36 | −1 | −6A | −6 | 1A | | 0.25 | 160 | | F-103 |
| 2SB 286 | " | Ge.D | −80 | −0.5 | −6A | 43W (Tc = 25°C) | 90 | −220 | −14 | 17 | −1 | −6A | | | | | | | F-103 |
| 2SB 287 | " | " | −80 | −1.3 | −6A | 43W (Tc = 25°C) | 90 | −220 | −14 | 36 | −1 | −6A | | | | | | | F-103 |
| 2SB 288 | " | Ge.A | −32 | −10 | −125 | 125 | 75 | −10 | −10 | 50 | −0.7 | −125 | | | | | | | F-12A |
| 2SB 289 | " | " | −60 | −10 | −125 | 125 | 75 | −10 | −10 | 50 | −0.7 | −125 | | | | | | | F-12A |
| 2SB 290 | LN | " | −18 | −12 | −40 | 65 | 75 | −4 | −12 | | | | −3 | 0.5 | 110 | 5 | 9.5 | | F-84A |
| 2SB 291 | AF | " | −30 | −12 | −150 | 150 | 75 | −10 | −12 | 70 | -1 | −50 | −6 | 1 | 100 | 1 | 35 | | F-84A |
| 2SB 292 | PA | " | −30 | −12 | −150 | 150 | 75 | −10 | −12 | 80 | −1 | −50 | −6 | 1 | 100 | 1 | 35 | | F-84A |
| 2SB 292A | " | " | −60 | −12 | −150 | 150 | 75 | −10 | −12 | 80 | −1 | −50 | | | | | | | F-84A |
| 2SB 293 | " | " | −18 | | −250 | 150 | 85 | −10 | −12 | 70 | −1 | −150 | | | | | | | F-12B |
| 2SB 294 | AF | " | −18 | | −250 | 150 | 85 | −10 | −12 | | | | −4 | 1 | 36 | | | | F-12B |
| 2SB 295 | SW | " | −100 | −40 | −5A | 40W (Tc = 25°C) | 85 | −3mA | −100 | 70 | −1 | −1A | −1 | 1A | | fae = 4.5kc | | | F-102 |
| 2SB 296 | " | Ge.D | −130 | −3 | −10A | 35W (Tc = 25°C) | 75 | −1mA | −50 | 35 | −1.5 | −10A | | | | | | | F-102 |
| 2SB 297 | | | | | | | | | | | | | | | | | | | |
| 2SB 298 | | | | | | | | | | | | | | | | | | | |
| 2SB 299 | SW | Ge.A | −30 | −25 | −150 | 150 | 85 | −10 | −12 | 65 | −1 | −150 | | | | | | | F-12B |
| 2SB 300 | PA | Ge.D | −100 | −1 | −10A | 35W (Tc = 25°C) | 75 | −330 | −12 | 60 | −1.5 | 5A | | | | | | | F-102 |
| 2SB 301 | " | " | −60 | −1 | −10A | 35W | 75 | −330 | −12 | 60 | −1.5 | −5A | | | | | | | F-102 |
| 2SB 302 | LN | Ge.A | −10 | −5 | −2 | 40 | 85 | −6 | −10 | | | | −4 | 0.5 | 80 | NF = 4dB (f = 1kc) | | | F-12B |
| 2SB 303 | LN.AF | " | −25 | −12 | −20 | 100 | 75 | −15 | −15 | | | | −2 | 0.5 | 180 | NF = 3.5dB (VCE = −6V, IE = 1mA) | | | F-12B |
| 2SB 304 | SW | " | −30 | −10 | −500 | 225 | 70 | −15 | −30 | 70 | −1 | −50 | | | | | | | F-84C |
| 2SB 304A | " | " | −45 | −15 | −500 | 225 | 70 | −10 | −35 | 70 | −1 | −50 | | | | | | | F-84B |
| 2SB 305 | | | | | | | | | | | | | | | | | | | |
| 2SB 306 | SW | Ge.A | −100 | −50 | −20 | 75 | 75 | z-10 | -105 | 60 | −0.35 | −2 | | | | | | | F-84A |
| 2SB 307 | | | | | | | | | | | | | | | | | | | |
| 2SB 308 | | | | | | | | | | | | | | | | | | | |
| 2SB 309 | PA | Ge.DB | −75 | −1 | −8A | 43W (Tc = 25°C) | 90 | −200 | −0.5 | 62 | VCB = 0V | IE = 1A | −4 | 1A | | fae = 17kc | | | F-102 |
| 2SB 310 | SW | Ge.DB | −140 | −1 | −8A | 43W (Tc = 25°C) | 90 | −220 | −0.5 | 62 | VCB = 0V | IE = 1A | −4 | 1A | | fae = 17kc | | | F-103 |
| 2SB 311 | SW | " | −180 | −1 | −10A | 50W (Tc = 25°C) | 90 | −220 | −0.5 | 62 | VCB = 0V | IE = 1A | −4 | 1A | | fae = 17kc | | | F-103 |
| 2SB 312 | " | " | −140 | −1 | −8A | 43W (Tc = 25°C) | 90 | −220 | −0.5 | 27 | VCB = 0V | −8A | | | | | | | F-103 |
| 2SB 313 | " | " | −180 | −1 | −10A | 43W (Tc = 25°C) | 90 | −220 | −0.5 | 27 | VCB = 0V | −8A | | | | | | | F-103 |
| 2SB 314 | PA | Ge.A | −30 | | −500 | 3W (Tc = 25°C) | 80 | −100 | −30 | 45 | −2 | −200 | | | | | | | F-96 |
| 2SB 315 | AF | " | −16 | | −300 | 150 | 85 | −14 | −12 | | | | −3 | 1 | 50 | | | | F-12A |
| 2SB 316 | PA | " | −16 | | −300 | 150 | 85 | −14 | −12 | 60 | −1 | −150 | | | | | | | F-12A |
| 2SB 317 | " | " | −16 | | −300 | 250 | 85 | −14 | −12 | 60 | −1 | −150 | | | | | | | F-71A |
| 2SB 318 | " | Ge.D | −60 | −1 | −5A | 50W (Tc = 25°C) | 100 | −1mA | −40 | 100 | −2 | −1A | −5 | 500 | | 2* | | | F-102 |
| 2SB 319 | SW | " | −100 | −1 | −5A | 50W (Tc = 25°C) | 100 | −1mA | −40 | 100 | −2 | −1A | −5 | 500 | | 3* | | | F-102 |
| 2SB 320 | " | " | −100 | −2 | −5A | 50W (Tc = 25°C) | 100 | −1mA | −40 | 100 | −2 | −1A | −5 | 500 | | 2* | | | F-102 |
| 2SB 321 | LN | Ge.A | −12 | −12 | −50 | 40 | 75 | −4 | −12 | | | | −1.5 | 0.5 | 100 | NF = 3dB (VCE = −3V, IE = 0.5mA) | | | F-1 |
| 2SB 322 | AF | " | −12 | −12 | −50 | 40 | 75 | −4 | −12 | | | | −1.5 | 0.5 | 50 | | | | F-1 |
| 2SB 323 | " | " | −12 | −12 | −50 | 40 | 75 | −4 | −12 | | | | −1.5 | 0.5 | 100 | | | | F-1 |
| 2SB 324 | PA | " | −32 | −10 | −1A | 200 | 90 | −10 | −10 | 53 | 0V | −0.3A | −2 | 10 | | fae > 10kc | | | F-12A |
| 2SB 325 | SW | " | −120 | −50 | −0.6A | 1.8W (Tc = 25°C) | 85 | −20 | −5 | 50 | −2 | −50 | | | | | | | F-93 |
| 2SB 326 | PA | " | −30 | −15 | −500 | 225 | 85 | −10 | −30 | 65 | −1 | −20 | −5 | 1 | | 3 | | | F-84A |
| 2SB 327 | " | " | −30 | −15 | −500 | 225 | 85 | −10 | −30 | 110 | −1 | −20 | −5 | 1 | | 3.3 | | | F-84A |
| 2SB 328 | " | " | −25 | −10 | −200 | 150 | 85 | −10 | −15 | 70 | −1 | −20 | −6 | 1 | | 2 | | | F-19A |
| 2SB 329 | " | " | −25 | −10 | −200 | 150 | 85 | −10 | −15 | 100 | −1 | −20 | −6 | 1 | | 2 | | | F-19A |
| 2SB 330 | SW | " | −110 | −50 | −150 | 225 | 85 | −20 | −50 | 35 | −1 | −20 | −5 | 1 | | 0.5 | | | F-84A |
| 2SB 331 | " | " | −40 | −20 | −15A | 80W (Tc = 25°C) | 100 | −4mA | −40 | 70 | −2 | −5A | | | | | | | F-109 |
| 2SB 332 | " | " | −60 | −40 | −15A | 80W (Tc = 25°C) | 100 | −4mA | −60 | 60 | −2 | −5A | | | | | | | F-109 |
| 2SB 333 | " | " | −80 | −40 | −15A | 80W (Tc = 25°C) | 100 | −4mA | −80 | 60 | −2 | −5A | | | | | | | F-109 |
| 2SB 334 | " | " | −100 | −60 | −15A | 80W (Tc = 25°C) | 100 | −4mA | −100 | 40 | −2 | −5A | | | | | | | F-109 |
| 2SB 335 | AF | " | −20 | −10 | −60 | 83 | 75 | −10 | −10 | 36-110 | −1 | IB = −250μA | −6 | 1 | 70 | | | | F-4 |
| 2SB 336 | PA | " | −20 | −10 | −60 | 83 | 75 | −10 | −10 | 80 | −1 | −60 | | | | | | | F-4 |
| 2SB 337 | " | " | −40 | −10 | −7A | 30W (Tc = 25°C) | 100 | −1mA | −30 | 90 | −2 | −1A | −2 | 1A | | 0.3 | | | F-103 |
| 2SB 338 | " | " | −60 | −10 | −7A | 50W (Tc = 25°C) | 90 | −1mA | −30 | 75 | −4 | −1A | | | | | | | F-103 |
| 2SB 339 | " | " | −80 | −50 | −10A | 50W (Tc = 25°C) | 90 | −250 | −30 | 75 | −4 | −1A | −4 | 1A | | 0.25 | | | F-103 |

**Pin Configurations are 1. Emitter, 2. Base, 3. Collector, 4. Shield, unless otherwise specified. (Outline Dimensions: mm)**

| TYPE NO. | USES | MATERIAL STRUCTURE | $V_{CBO}$ (V) | $V_{EBO}$ (V) | $I_C$ (mA) | Pd (mW) | Tj (°C) | $I_{CBO}$ (uA) | VALUE OF DC/PULSE $V_{CB}$(V) | $h_{FE}$ | $V_{CE}$(V) | $I_C$(mA) | BIAS $V_{CB}$(V) | $I_E$(mA) | $h_{fe}$ $h_{fb}$* | $f_{ab}$ $f_T$ (Mc) | Cob (pF) | $r_{bb'}$ $h_{ie(real)}$* (Ω) | CASE STYLE |
|---|---|---|---|---|---|---|---|---|---|---|---|---|---|---|---|---|---|---|---|
| 2SB 340 | PA.SW | Ge.A | −100 | −50 | −10A | 50W (Tc = 25°C) | 90 | −250 | −30 | 35 | −1 | −8A | −4 | 1A | | 0.25 | | | F-103 |
| 2SB 341 | " | " | −120 | −50 | −10A | 50W (Tc = 25°C) | 90 | −250 | −30 | 35 | −1 | −8A | | | | | | | F-103 |
| 2SB 342 | " | Ge.D | −120 | −1 | −6A | 30W (Tc = 25°C) | 85 | −5mA | −120 | 50 | −1.5 | −5A | −1.5 | 500 | | 1.5 | | | F-103 |
| 2SB 343 | " | " | −150 | −1 | −6A | 30W (Tc = 25°C) | 85 | −5mA | −150 | 50 | −1.5 | −5A | −1.5 | | | | | | F-103 |
| 2SB 344 | | | | | | | | | | | | | | | | | | | |
| 2SB 345 | AF | Ge.A | −32 | −10 | −100 | 165 | 85 | −10 | −10 | | | | −5 | 2 | 90 | $f_{ae}$ = 17kc | | | F-12A |
| 2SB 346 | " | " | −32 | −10 | −100 | 165 | 85 | −10 | −10 | | | | −5 | 2 | 120 | $f_{ae}$ = 17kc | | | F-12A |
| 2SB 347 | LN | " | −32 | −10 | −100 | 165 | 85 | −10 | −10 | | | | −5 | 2 | 90 | $f_{ae}$ = 17kc | NF = 3dB ($I_E$ = 0.5mA) | | F-12A |
| 2SB 348 | " | " | −32 | −10 | −100 | 165 | 75 | −10 | −10 | | | | −5 | 2 | 120 | $f_{ae}$ = | NF = 3dB ($I_E$ = 0.5mA) | | F-12A |
| 2SB 349 | AF | " | −20 | | −10 | 50 | 75 | −20 | −10 | 150 | −1.5 | −10 | | | | | | | F-12A |
| 2SB 350 | PA | " | −25 | | −50 | 50 | 75 | −20 | −10 | 100 | −1.5 | −30 | | | | | | | F-12A |
| 2SB 351 | SW | " | −40 | −20 | −15A | 70W (Tc = 25°C) | 100 | −4mA | −40 | 70 | −2 | −5A | | | | | | | F-109 |
| 2SB 352 | " | " | −60 | −40 | −15A | 70W (Tc = 25°C) | 100 | −4mA | −60 | 70 | −2 | −5A | | | | | | | F-109 |
| 2SB 353 | " | " | −80 | −40 | −15A | 70W (Tc = 25°C) | 100 | −4mA | −80 | 70 | −2 | −5A | | | | | | | F-109 |
| 2SB 354 | " | " | −100 | −60 | −15A | 70W (Tc = 25°C) | 100 | −4mA | −100 | 70 | −2 | −5A | | | | | | | F-109 |
| 2SB 355 | PA | " | −25 | −12 | −1A | 4W (Tc = 25°C) | 85 | −100 | −12 | 60 | −1.5 | −0.5A | | | | | | | F-101 |
| 2SB 356 | " | " | −80 | −12 | −1A | 4W (Tc = 25°C) | 85 | −50 | −50 | 50 | −1.5 | −0.5A | | | | | | | F-101 |
| 2SB 357 | " | " | −100 | −12 | −1A | 3W (Tc = 25°C) | 85 | −50 | −50 | 40 | −1.5 | −0.5A | | | | | | | F-101 |
| 2SB 358 | " | Ge.D | −80 | −1.5 | −6A | 50W (Tc = 25°C) | 85 | −5mA | −80 | 30 | −1.5 | −4A | −1.5 | 200 | | 2 | | | F-103 |
| 2SB 359 | SW | " | −120 | −1.5 | −10A | 50W (Tc = 25°C) | 85 | −5mA | −80 | 25 | −1.5 | −4A | −1.5 | 200 | | | | | F-103 |
| 2SB 360 | " | " | −180 | −1.5 | −10A | 50W (Tc = 25°C) | 85 | −5mA | −80 | 30 | −1.5 | −4A | −1.5 | 200 | | 2 | | | F-103 |
| 2SB 361 | PA | Ge.DB | −80 | −1 | −5A | 40W (Tc = 25°C) | 100 | −500 | −40 | 110 | −2 | −1A | −5 | 0.7A | | $f_{ae}$ = 50kc | | | F-103 |
| 2SB 362 | " | " | −100 | −1 | −7A | 50W (Tc = 25°C) | 90 | −500 | −30 | 75 | −2 | −5A | −5 | 0.7A | | $f_{ae}$ = | | | F-103 |
| 2SB 363 | SW | Ge.D | −140 | −1 | −8A | 43W (Tc = 25°C) | 90 | −10mA | −140 | 50 | −1.5 | −5A | | | | | | | F-102 |
| 2SB 364 | PA | Ge.A | −20 | −12 | −400 | 150 | 75 | −14 | −20 | 60-150 | −0.5 | −100 | −6 | 1 | | 1 | | | F-12A |
| 2SB 365 | " | " | −20 | −12 | −400 | 150 | 75 | −14 | −20 | 35-90 | −0.5 | −100 | −6 | 1 | | 1 | | | F-12A |
| 2SB 366 | SW | Ge.D | −140 | −1 | −8A | 43W (Tc = 25°C) | 90 | −330 | −12 | 50 | −1.5 | −5A | | | | | | | F-102 |
| 2SB 367 | PA | Ge.A | −25 | −12 | −1A | 6.6W (Tc = 25°C) | 85 | −100 | −12 | 90 | −1.5 | −0.5A | | | | | | | F-100 |
| 2SB 368 | " | " | −45 | −12 | −1A | 6.6W (Tc = 25°C) | 85 | −100 | −12 | 90 | −1.5 | −0.5A | | | | | | | F-100 |
| 2SB 369 | | | | | | | | | | | | | | | | | | | |
| 2SB 370 | PA | Ge.A | −25 | −12 | −500 | 200 | 85 | −20 | −12 | 150 | −1 | −150 | −6 | 1 | 110 | | | | F-12A |
| 2SB 370A | " | " | −32 | −12 | −500 | 200 | 85 | −20 | −12 | 150 | −1 | −150 | −6 | 1 | 110 | | | | F-12A |
| 2SB 371 | " | " | −32 | −10 | −200 | 165 | 75 | −15 | −10 | 790 | $V_{CB}$ = 0V | −1A | −2 | 10 | | $f_{ae}$ > 10kc | | | F-12A |
| 2SB 372 | " | " | −25 | −10 | −1A | 1.5W (Tc = 25°C) | 85 | −50 | −20 | | | | | | | | | | F-84B |
| 2SB 373 | " | " | −25 | −10 | −1A | 1.5W (Tc = 25°C) | 85 | −50 | −20 | 150 | −1.5 | −200 | −1.5 | 200 | | | 0.7 | | F-84B |
| 2SB 374 | " | " | −60 | −10 | −1A | 1.5W (Tc = 25°C) | 85 | −50 | −20 | 150 | −1.5 | −200 | | | | | | | F-84B |
| 2SB 375 | SW | Ge.D | −135 | −3 | −9A | 30W (Tc = 25°C) | 85 | −5mA | −150 | 50 | −1.5 | −8A | −1.5 | 500 | | | 1.5 | | F-103 |
| 2SB 376 | PA | Ge.A | −20 | −6 | −300 | 225 | 75 | −20 | −12 | 50 | −0.5 | −300 | | | | | | | F-17 |
| 2SB 377 | LN | " | −32 | | −150 | 270 | 85 | −10 | −32 | | | | −6 | 0.5 | 134 | NF = 2dB ($f$ = 1kc) | | | F-84A |
| 2SB 378 | AF.PA | " | −18 | | −150 | 180 | 65 | −10 | −18 | 42 | −1 | −20 | −6 | 1 | 34 | 2.5 | 25 | | F-84A |
| 2SB 378A | " | " | −23 | | −300 | 270 | 85 | −10 | −23 | 42 | −1 | −20 | −6 | 1 | 34 | 2.5 | 25 | | F-84A |
| 2SB 378B | " | " | −23 | | −500 | 270 | 85 | −10 | −23 | 42 | −1 | −20 | −6 | 1 | 34 | 2.5 | 25 | | F-84A |
| 2SB 379 | " | " | −18 | | −150 | 180 | 65 | −10 | −18 | 84 | −1 | −20 | −6 | 1 | 68 | 3 | 25 | | F-84A |
| 2SB 379A | " | " | −23 | | −300 | 270 | 85 | −10 | −23 | 84 | −1 | −20 | −6 | 1 | 68 | 3 | 25 | | F-84A |
| 2SB 379B | " | " | −23 | | −500 | 270 | 85 | −10 | −23 | 84 | −1 | −20 | −6 | 1 | 68 | 3 | 25 | | F-84A |
| 2SB 380 | " | " | −18 | | −150 | 180 | 65 | −10 | −18 | 169 | −1 | −20 | −6 | 1 | 136 | 3.5 | 25 | | F-84A |
| 2SB 380A | " | " | −23 | | −300 | 270 | 85 | −10 | −23 | 169 | −1 | −20 | −6 | 1 | 136 | 3.5 | 25 | | F-84A |
| 2SB 381 | " | " | −32 | | −300 | 270 | 85 | −10 | −32 | 42 | −1 | −20 | −6 | 1 | 34 | 2.5 | 25 | | F-84A |
| 2SB 382 | " | " | −32 | | −300 | 270 | 85 | −10 | −32 | 84 | −1 | −20 | −6 | 1 | 68 | 3 | 25 | | F-84A |
| 2SB 383 | PA | " | −32 | | −500 | 270 | 85 | −10 | −32 | 84 | −1 | −20 | −6 | 1 | | 3 | 25 | | F-84A |
| 2SB 384 | AF | " | −20 | | −30 | 80 | 85 | −10 | −12 | | | | −6 | 1 | 60 | | | | F-12A |
| 2SB 385 | PA | " | −20 | | −30 | 80 | 85 | −10 | −12 | 50 | −1 | −50 | | | | | | | F-12A |
| 2SB 386 | SW | " | −30 | −15 | −300 | 150 | 85 | −10 | | −0.5 | −50 | | | | | | | | F-12A |
| 2SB 387 | AF | " | −12 | −2.5 | −20 | 30 | 85 | −10 | −12 | | | | −0.5 | 0.25 | 55 | 4 | | | F-2B |
| 2SB 388 | | | | | | | | | | | | | | | | | | | |
| 2SB 389 | LN | Ge.A | −12 | −0.5 | −10 | 80 | 85 | −6 | −12 | | | | −4 | 0.5 | 100 | NF = 3dB ($f$ = 1kc) | | | F-12A |
| 2SB 390 | PA.SW | Ge.D | −80 | −1 | −6A | 30W (Tc = 25°C) | 85 | −200 | −15 | 50 | −1.5 | −3A | −1.5 | 500 | | | 1.5 | | F-103 |
| 2SB 391 | " | " | −50 | −1 | −6A | 30W (Tc = 25°C) | 85 | −5mA | −50 | 75 | −1.5 | −500 | | | 1.5 | | | | F-103 |
| 2SB 392 | AF.SW | Ge.A | −20 | −13 | −200 | 200 | 85 | −7 | −12 | 75 | −0.5 | −10 | −5 | 1 | 90 | | | | F-84B |
| 2SB 393 | " | " | −28 | −13 | −200 | 200 | 85 | −7 | −12 | 38 | −0.5 | −10 | −5 | 1 | 45 | | | | F-84B |

**Pin Configurations are 1. Emitter, 2. Base, 3. Collector, 4. Shield, unless otherwise specified. (Outline Dimensions: mm)**

| TYPE NO. | USES | MATERIAL STRUCTURE | $V_{CBO}$ (V) | $V_{EBO}$ (V) | $I_C$ (mA) | Pd (mW) | Tj (°C) | $I_{CBO}$ (uA) | VALUE OF DC/PULSE | | | | BIAS | | hfe hfb* | fab fT (Mc) | Cob (pF) | $r_{bb'}$ $h_{ie(real)}$* (Ω) | CASE STYLE |
|---|---|---|---|---|---|---|---|---|---|---|---|---|---|---|---|---|---|---|---|
| | | | | | | | | | $V_{CB}$(V) | hFE | $V_{CE}$(V) | $I_C$(mA) | $V_{CB}$(V) | $I_e$(mA) | | | | | |
| 2SB 394 | AF.SW | Ge.A | −28 | −13 | −200 | 200 | 85 | −7 | −12 | 75 | −0.5 | −10 | −5 | 1 | 90 | | | | F-84B |
| 2SB 395 | " | " | −28 | −13 | −200 | 200 | 85 | −7 | −12 | 150 | −0.5 | −10 | −5 | 1 | 180 | | | | F-84B |
| 2SB 396 | " | " | −40 | −13 | −200 | 150 | 85 | −7 | −12 | 75 | −0.5 | −10 | −5 | 1 | 90 | | | | F-84B |
| 2SB 397 | SW | " | −48 | −115 | −80 | 200 | 85 | −10 | −12 | 45 | −0.5 | −5 | | | | | | | F-84B |
| 2SB 398 | " | " | −110 | −30 | −80 | 200 | 85 | −15 | −100 | 45 | −0.5 | −5 | | | | | | | F-84B |
| 2SB 399 | " | " | −110 | −30 | −80 | 200 | 85 | −15 | −100 | 25 | −0.5 | −20 | | | | | | | F-84B |
| 2SB 400 | LN | " | −20 | −10 | −40 | 100 | 85 | −15 | −10 | | | | −6 | 1 | 100 | 1 | 25 | | F-12A |
| 2SB 401 | SW | Ge.A | −40 | −10 | −300 | 240 | 85 | −10 | −10 | 60 | −0.5 | −300 | −5 | 10 | | >0.3* | | | F-84A |
| 2SB 402 | " | " | −6] | −10 | −300 | 240 | 85 | −10 | −10 | 60 | −0.5 | −300 | −5 | 10 | | >0.3* | | | F-84A |
| 2SB 403 | " | " | −40 | −20 | −300 | 240 | 85 | −10 | −10 | 100 | −0.5 | −300 | −5 | 10 | | >0.7* | | | F-84A |
| 2SB 404 | " | " | −100 | −40 | −100 | 100 | 85 | −20 | −100 | 100 | −1.5 | −30 | | | | | | | F-84B |
| 2SB 405 | PA | " | −25 | | −1A | 720 ($T_C$ = 25°C) | 85 | −50 | −20 | 100 | −1.5 | −200 | | | | 0.7 | | | F-12A |
| 2SB 406 | SW | Ge.D | −200 | −2 | −10A | 37.5W ($T_C$ = 25°C) | 100 | −250 | −30 | 35 | −1.5 | −8A | −2 | 500 | | 0.7 | | | F-102 |
| 2SB 407 | PA | Ge.A | −30 | −10 | −7A | 30W ($T_C$ = 25°C) | 85 | −500 | −30 | 80 | −1.5 | −500 | | | | 0.35* | | | F-103 |
| 2SB 408 | " | " | −25 | −12 | −200 | 300 | 85 | −15 | −20 | 175 | −1.5 | −30 | | | | | | <150 | F-12B |
| 2SB 409 | AF | " | −12 | | −50 | 150 | 75 | −15 | −6 | | | | −6 | 1 | 80 | | | | F-12B |
| 2SB 410 | PA.SW | Ge.DB | −135 | −5 | −15A | 40W ($T_C$ = 25°C) | 85 | −250 | −30 | 50 | −1.5 | −8A | −1.5 | −500 | | 3* | | | F-103 |
| 2SB 411 | " | " | −200 | −5 | −11A | 40W ($T_C$ = 25°C) | 85 | −250 | −30 | 40 | −1.5 | −8A | −1.5 | −500 | | 2.5* | | | F-103 |
| 2SB 412 | " | " | −300 | -5 | −11A | 40W ($T_C$ = 25°C) | 85 | −250 | −30 | 50 | −1.5 | −8A | | | | | | | F-103 |
| 2SB 413 | PA | Ge.D | −60 | −1 | −1.5A | 12.5W ($T_C$ = 25°C) | 85 | −100 | −12 | 30 | −1 | −0.5A | | | | | | | F-101 |
| 2SB 414 | " | " | −32 | −1 | −1.5A | 12.5W ($T_C$ = 25°C) | 85 | −100 | −12 | 30 | −1 | −0.5A | | | | | | | F-101 |
| 2SB 415 | " | Ge.A | −32 | −5 | −1A | 200 | 85 | −14 | −12 | 70 | $V_{CB}$ = 0 | −1 | 100 | | 1 | | | | F-12A |
| 2SB 416 | AF | Ge.A | −25 | −13 | −80 | 150 | 85 | −10 | −12 | 60 | −0.5 | −10 | −5 | 1 | 120 | | | | F-84B |
| 2SB 417 | " | " | −45 | −13 | −80 | 150 | 85 | −10 | −12 | 60 | −0.5 | −10 | −5 | 1 | 120 | | | | F-84B |
| 2SB 418 | " | " | −70 | −13 | −80 | 150 | 85 | −10 | −12 | 60 | −0.5 | −10 | −5 | 1 | 120 | | | | F-84B |
| 2SB 419 | PA | Ge.DB | −45 | −1.2 | −1.5A | 6W ($T_C$ = 25°C) | 100 | −250 | −12 | 80 | −1.5 | −0.5A | | | | | | | F-100 |
| 2SB 420 | " | " | −120 | −1.5 | −1.5A | 6W ($T_C$ = 25°C) | 100 | −250 | −12 | 100 | −1.5 | −1A | | | | | | | F-100 |
| 2SB 421 | " | Ge.D | −80 | −1 | −600 | 300 | 85 | −50 | −12 | 70 | −1 | −150 | | | | | | | F-77 |
| 2SB 422 | AF | Ge.A | −18 | −2 | −40 | 60 | 75 | −12 | −12 | | | | −6 | 1 | 50 | | | | F-12A |
| 2SB 423 | PA | " | −30 | −12 | −150 | 150 | 75 | −30 | −30 | 70 | −1.5 | −50 | | | | | | | F-12A |
| 2SB 424 | SW | Ge.A | −80 | −40 | −3A | 30W ($T_C$ = 25°C) | 85 | −160 | −12 | 60 | −1.5 | −1A | | | | | | | F-102 |
| 2SB 425 | PA | " | −60 | −12 | −3A | 30W ($T_C$ = 25°C) | 85 | −160 | −12 | 60 | −1.5 | −1A | | | | | | | F-102 |
| 2SB 426 | " | " | −32 | −12 | −3A | 30W ($T_C$ = 25°C) | 85 | −160 | −12 | 60 | −1.5 | −1A | | | | | | | F-102 |
| 2SB 427 | SW | " | −45 | −15 | −500 | 225 | 70 | −15 | −45 | 60 | −1 | −100 | −6 | 1 | | 1 | | | F-84B |
| 2SB 428 | PA | " | −45 | −15 | −500 | 225 | 70 | −15 | −45 | 90 | −1 | −100 | −6 | 1 | | 1 | | | F-84B |
| 2SB 429 | " | " | −30 | | −50 | 100 | 85 | −16 | −30 | 150 | −1 | −20 | | | | | | | F-19A |
| 2SB 430 | " | Ge.DB | −70 | | −20A | 80W ($T_C$ = 25°C) | 90 | −20mA | −70 | $V_{CB}$ = 0V | −4A | | | | | | | | F-109 |
| 2SB 431 | " | Ge.A | −32 | −12 | −500 | 200 | 85 | −20 | −12 | 120 | −1 | −150 | −6 | 1 | 80 | 1.2 | | | F-12A |
| 2SB 432 | PA.SW | Ge.D | −150 | −2 | −5A | 50W ($T_C$ = 25°C) | 100 | −1mA | −40 | 70 | −2 | −5A | −5 | 500 | | 3* | | | F-102 |
| 2SB 433 | SW | Ge.A | −70 | −40 | −15A | 56W ($T_C$ = 25°C) | 85 | −4mA | −30 | 50 | −2 | −5A | | | | | | | F-102 |
| 2SB 434 | PA | Si.EMe | −50 | −5 | −3A | 25W ($T_C$ = 25°C) | 150 | −10 | −30 | 80 | −5 | −0.5A | −5 | 500 | | 3* | 200 | | F-119 |
| 2SB 435 | " | " | −35 | −5 | −3A | 25W ($T_C$ = 25°C) | 150 | −10 | −30 | 80 | −5 | −0.5A | −5 | 500 | | 3* | 200 | | F-119 |
| 2SB 436 | AF | Ge.A | −25 | | −120 | 120 | 85 | −10 | −12 | 60 | −0.5 | −10 | −5 | 1 | 80 | | | | F-12A |
| 2SB 437 | " | " | −45 | | −120 | 120 | 85 | −10 | −12 | 60 | −0.5 | −10 | −5 | 1 | 80 | | | | F-12A |
| 2SB 438 | " | " | −70 | | −120 | 120 | 85 | −10 | −12 | 60 | −0.5 | −10 | −5 | 1 | 80 | | | | F-12A |
| 2SB 439 | " | " | −30 | −12 | −150 | 150 | 75 | −14 | −12 | | | | −6 | 1 | 70-270 | 2 | | | F-12A |
| 2SB 440 | LN | " | −30 | −12 | −150 | 150 | 75 | −14 | −12 | | | | −6 | 1 | 70-270 | NF = 3dB ($f$ = 1kc) | | | F-12A |
| 2SB 441 | PA | Ge.DB | −160 | −1 | −6A | 40W ($T_C$ = 25°C) | 100 | −250 | −30 | 50 | −1.5 | −200 | | | | | | | F-103 |
| 2SB 442 | SW | " | −160 | −1.5 | −6A | 40W ($T_C$ = 25°C) | 100 | −500 | −30 | 50 | −1.5 | −4A | | | | | | | F-103 |
| 2SB 443 | AF.LN | Ge.A | −18 | −12 | −10 | 100 | 85 | −10 | −12 | | | | −6 | 1 | 150 | 3 | | | F-12A |
| 2SB 444 | " | " | −18 | −12 | −10 | 100 | 85 | −7 | −12 | | | | −6 | 1 | 160 | 3 | | | F-12A |
| 2SB 445 | PA | Ge.D | −40 | −1 | −1.5A | 10W ($T_C$ = 25°C) | 85 | −200 | −12 | 100 | −2 | −1A | −5 | 0.5A | | 1.5* | | | F-101 |
| 2SB 446 | " | " | −60 | −1 | −1.5A | 10W ($T_C$ = 25°C) | 85 | −100 | −12 | 100 | −2 | −1A | −5 | 0.5A | 1.5* | | | | F-101 |
| 2SB 447 | PA.SW | " | −220 | −3 | −6A | 45W ($T_C$ = 25°C) | 90 | −500 | −50 | 35 | −1 | −6A | −5 | 0.5A | | 1.5* | | | F-102 |
| 2SB 448 | PA | Ge.A | −32 | −10 | −1A | 13W ($T_C$ = 25°C) | 90 | −1mA | −32 | 50 | −0.5 | −1A | | | | | | | F-100 |
| 2SB 449 | " | " | −50 | −20 | −3.5A | 22.5W ($T_C$ = 25°C) | 100 | −3mA | −14 | 35 | $V_{CB}$ = 0V | −3A | −2 | 0.5A | | $\frac{fae}{>17kHz}$ | | | F-103 |
| 2SB 450 | PA | Ge.A | −25 | | −500 | 200 | 85 | −20 | −12 | 120 | −1 | −150 | | | | | | | F-12A |
| 2SB 451 | " | " | −25 | −6 | −1A | 300 | 85 | −30 | −12 | 80 | −1 | −150 | | | | | | | F-69 |
| 2SB 452 | " | " | −25 | −6 | −1A | 300 | 85 | −30 | −12 | 150 | −1 | −150 | | | | | | | F-69 |
| 2SB 453 | PS.SW | " | −30 | −15 | −300 | 250 | 85 | −12 | −25 | 120 | −1 | −100 | −6 | 1 | | >1 | | | F-68 |

**Pin Configurations are 1. Emitter, 2. Base, 3. Collector, 4. Shield, unless otherwise specified. (Outline Dimensions: mm)**

| TYPE NO. | USES | MATERIAL STRUCTURE | $V_{CBO}$ (V) | $V_{EBO}$ (V) | $I_C$ (mA) | $P_d$ (mW) | $T_j$ (°C) | $I_{CBO}$ (uA) | $V_{CB}$(V) | VALUE OF DC/PULSE $h_{FE}$ | $V_{CE}$(V) | $I_C$(mA) | BIAS $V_{CB}$(V) | $I_e$(mA) | $h_{fe}$ $h_{fb}$* | $f_{ab}$ $f_T$ (Mc) | $C_{ob}$ (pF) | $r_{bb'}$ $h_{ie(real)}$* (Ω) | CASE STYLE |
|---|---|---|---|---|---|---|---|---|---|---|---|---|---|---|---|---|---|---|---|
| 2SB 454 | PA.SW | Ge.A | −80 | −40 | −300 | 250 | 85 | −30 | −80 | 120 | −1 | −100 | −6 | 1 | | >1 | | | F-68 |
| 2SB 455 | " | " | −105 | −50 | −150 | 250 | 85 | −30 | −105 | 120 | −1 | −100 | −6 | 1 | | >1 | | | F-68 |
| 2SB 456 | " | " | −80 | −30 | −1A | 13W ($T_C$ = 25°C) | 85 | −100 | −80 | 80 | −1 | −300 | | | | | | | F-83 |
| 2SB 457 | PA | " | −20 | −2.5 | −500 | 150 | 85 | −15 | −12 | 110 | −1 | −150 | | | | | | | F-12B |
| 2SB 457A | " | " | −32 | −6 | −500 | 150 | 85 | −15 | −12 | 110 | −1 | −150 | | | | | | | F-12B |
| 2SB 458 | " | " | −25 | −12 | −1A | 800 | 85 | −100 | −12 | 65 | −1.5 | −500 | | | | | | | F-100 |
| 2SB 458A | " | " | −45 | −12 | −1A | 800 | 85 | −100 | −12 | 65 | −1.5 | −500 | | | | | | | F-100 |
| 2SB 458B | " | " | −100 | −12 | −1A | 800 | 85 | −50 | −50 | 65 | −1.5 | −500 | | | | | | | F-100 |
| 2SB 459 | AF.LN | " | −30 | −2.5 | −50 | 120 | 100 | −12 | −20 | 130 | −6 | −1 | −6 | 1 | 180 | NF = 4.5dB (−6V, 1mA, 1kc) | | | F-12A |
| 2SB 460 | " | " | −40 | −2.5 | −50 | 120 | 100 | −6 | −20 | 130 | −6 | −1 | −6 | 1 | 180 | NF = 4.5dB (−6V, 1mA, 1kc) | | | F-12A |
| 2SB 461 | PA | " | −35 | −12 | −1A | 250 | 85 | −14 | −12 | 50-180 | −0.5 | −500 | −1 | 100 | | 1.2 | | | F-84A |
| 2SB 462 | " | " | −60 | −12 | −2A | 6W ($T_C$ = 25°C) | 85 | −70 | −12 | 80 | −1 | −0.5A | | | | | | | F-99 |
| 2SB 463 | " | " | −32 | −12 | −2A | 6W ($T_C$ = 25°C) | 85 | −70 | −12 | 80 | −1 | −0.5A | | | | | | | F-99 |
| 2SB 464 | " | Ge.D | −100 | −1 | −6A | 30W ($T_C$ = 25°C) | 85 | −330 | −12 | 70 | −1.5 | −1A | | | | | | | F-102 |
| 2SB 465 | " | " | −60 | −1 | −6A | 30W ($T_C$ = 25°C) | 85 | −330 | −12 | 70 | −1.5 | −1A | | | | | | | F-102 |
| 2SB 466 | " | Ge.A | −40 | −12 | −500 | 12W ($T_C$ = 25°C) | 90 | −500 | −30 | 70 | −1.5 | −50 | −1.5 | 500 | | $f_{ae}$ = 13kc | | | F-101 |
| 2SB 467 | " | " | −60 | −12 | −500 | 12W ($T_C$ = 25°C) | 90 | −200 | −30 | 70 | −1.5 | −500 | −1.5 | 500 | | $f_{ae}$ = 13kc | | | F-101 |
| 2SB 468 | SW | Ge.DB | −200 | −1.5 | −10A | 32W ($T_C$ = 25°C) | 85 | −500 | −30 | 28 | −1.5 | −4A | | | | | | | F-103 |
| 2SB 469 | | | | | | | | | | | | | | | | | | | |
| 2SB 470 | AF | Ge.A | −25 | −2.5 | −50 | 80 | 85 | −6 | −20 | | | | −6 | 1 | 160 | | | | F-12A |
| 2SB 471 | PA | " | −60 | −10 | −10A | 30W | 100 | −500 | −30 | 90 | −2 | −1A | −2 | 1 | | 0.3 | | | F-103 |
| 2SB 472 | " | " | −80 | −10 | −10A | 30W | 100 | −500 | −30 | 90 | −2 | −1A | −2 | 1 | | 0.3 | | | F-103 |
| 2SB 473 | " | " | −32 | −10 | −1A | 4.3W ($T_C$ = 25°C) | 90 | −15 | −10 | 80 | $V_{CB}$ = 0V | −0.5A | | | | $f_{ae}$ = 20kc | | | F-100 |
| 2SB 474 | " | " | −35 | −6 | −2A | 12W ($T_C$ = 25°C) | 85 | −200 | −25 | 100 | −1.5 | −200 | −1.5 | 200 | | 0.7 | | | F-101 |
| 2SB 475 | " | " | −20 | −6 | −300 | 150 | 85 | −20 | −12 | 60 | −1 | −150 | | | | | | | F-12A |
| 2SB 476 | " | " | −20 | −6 | −2A | 6W ($T_C$ = 25°C) | 85 | −500 | −20 | 80 | −0.5 | −2A | | | | | | | F-84B |
| 2SB 477 | PA.SW | " | −30 | −15 | −30A | 80W ($T_C$ = 25°C) | 85 | −5mA | −30 | 40 | −2 | −15A | | | | | | | F-109 |
| 2SB 478 | " | " | −60 | −30 | −30A | 80W ($T_C$ = 25°C) | 85 | −5mA | −60 | 40 | −2 | −15A | | | | | | | F-109 |
| 2SB 479 | " | " | −80 | −40 | −30A | 80W ($T_C$ = 25°C) | 85 | −5mA | −80 | 40 | −2 | −15A | | | | | | | F-109 |
| 2SB 480 | " | " | −100 | −50 | −30A | 80W ($T_C$ = 25°C) | 85 | −5mA | −100 | 40 | −2 | −15A | | | | | | | F-109 |
| 2SB 481 | PA | Ge.A | −32 | −10 | −1A | 6W ($T_C$ = 25°C) | 90 | −1mA | −32 | 50 | −0.5 | −1A | −2 | 100 | | $f_{ae}$ = 15kc | | | F-100 |
| 2SB 482 | AF | " | −35 | −12 | −50 | 120 | 85 | −6 | −12 | | | | −6 | 1 | 200 | | | | F-12A |
| 2SB 483 | PA.SW | " | −80 | −40 | −15A | 60W ($T_C$ = 25°C) | 85 | −5mA | −80 | 100 | −1.5 | −10A | | | | | | | F-102 |
| 2SB 484 | " | " | −100 | −40 | −15A | 60W ($T_C$ = 25°C) | 85 | −5mA | −100 | 100 | −1.5 | −10A | | | | | | | F-102 |
| 2SB 485 | " | " | −140 | −40 | −15A | 60W ($T_C$ = 25°C) | 85 | −5mA | −140 | 100 | −1.5 | −10A | | | | | | | F-102 |
| 2SB 486 | Af.LN | " | −25 | −12 | −50 | 120 | 85 | −5 | −12 | | | | −6 | 1 | 200 | NF = 3dB ($f$ = 1kc) | | | F-12A |
| 2SB 487 | PA | " | −30 | −2.5 | −500 | 5W ($T_C$ = 25°C) | 85 | −20 | −12 | 60 | −1 | −300 | | | | | | | F-98A |
| 2SB 488 | " | " | −60 | −12 | −500 | 5W ($T_C$ = 25°C) | 85 | −20 | −12 | 60 | −1 | −300 | | | | | | | F-98A |
| 2SB 489 | | | | | | | | | | | | | | | | | | | |
| 2SB 490 | | | | | | | | | | | | | | | | | | | |
| 2SB 491 | | | −250 | −5 | −11A | 40W ($T_C$ = 25°C) | 85 | | | 35 | −1.5 | −8A | | | | 1.0* | | | |
| 2SB 492 | PA | Ge.A | −25 | −6 | −2A | 6W ($T_C$ = 25°C) | 85 | −50 | −20 | 110 | −1.5 | −200 | −1.5 | 200 | | 0.7 | | | F-84B |
| 2SB 493 | PA.SW | " | −40 | −14 | −1A | 9W ($T_C$ = 25°C) | 90 | −1mA | −40 | 70 | $V_{CB}$ = 0V | −3A | | | | | | | F-83 |
| 2SB 494 | PA | " | −25 | −6 | −1A | 200 | 85 | −20 | −12 | 55 | −1 | −150 | | | | | | | F-12A |
| 2SB 495 | " | " | −25 | −6 | −1A | 200 | 85 | −20 | −12 | 110 | −1 | −150 | | | | | | | F-12A |
| 2SB 496 | " | " | −25 | −2.5 | −250 | 300 | 85 | −14 | −25 | 90 | −1.5 | −50 | −6 | 1 | | 2 | | | F-12A |
| 2SB 497 | LN | " | −20 | | −30 | 65 | 85 | −6 | −12 | | | | −6 | 1 | 90 | NF = 3dB ($I_E$ = 0.5mA, $f$ = 1kc) | | | F-4 |
| 2SB 498 | " | " | −25 | | −50 | 100 | 85 | −5 | −15 | | | | −6 | 1 | 170 | NF = 3dB (−6V, 1mA) | | | F-19A |
| 2SB 499 | | | | | | | | | | | | | | | | | | | |
| 2SB 500 | | | | | | | | | | | | | | | | | | | |
| 2SB 501 | | | | | | | | | | | | | | | | | | | |
| 2SB 502 | PA | Si.EMe | −110 | −8 | −3A | 25W ($T_C$ = 25°C) | 150 | −10 | −50 | 80 | −5 | −500 | −10 | 500 | | 1* | 200 | | F-99 |
| 2SB 503 | " | " | −70 | −8 | −3A | 25W ($T_C$ = 25°C) | 150 | −10 | −50 | 80 | −5 | −500 | −10 | 500 | | 1* | 200 | | F-99 |
| 2SB 504 | PA.SW | Si.EP | −80 | −10 | −2A | 1W | 175 | −1 | −60 | 80 | −2 | −500 | | | | | | | F-84C |
| 2SB 505 | " | " | −80 | −10 | −2A | 15W ($T_C$ = 25°C) | 175 | −1 | −60 | 80 | −2 | −500 | | | | | | | F-97C |
| 2SB 506 | " | Si.EMe | −150 | −7 | −5A | 50W ($T_C$ = 25°C) | 175 | −2mA | −100 | 70 | −5 | −1A | | | | | | | F-102 |
| 2SB 507 | PA | Si.E | −60 | −5 | −3A | 30W ($T_C$ = 25°C) | 150 | −100 | −20 | 90 | −2 | −1A | | | | | | | F-162 |
| 2SB 508 | " | " | −60 | −5 | −3A | 30W ($T_C$ = 25°C) | 150 | −100 | −20 | 90 | −2 | −1A | | | | | | | F-163 |
| 2SB 509 | " | " | −60 | −5 | −4A | 35W ($T_C$ = 25°C) | 150 | −100 | −20 | 80 | −2 | −1A | | | | | | | F-99 |
| 2SB 510 | PA.SW | Si.EP | −80 | −7 | −1.5A | 800 | 150 | −1 | −60 | 100 | −2 | −200 | | | | | | | F-84B |

Pin Configurations are 1. Emitter, 2. Base, 3. Collector, 4. Shield, unless otherwise specified. (Outline Dimensions: mm)

| TYPE NO. | USES | MATERIAL STRUCTURE | $V_{CBO}$ (V) | $V_{EBO}$ (V) | $I_C$ (mA) | Pd (mW) | Tj (°C) | $I_{CBO}$ (μA) | VALUE OF DC/PULSE | | | BIAS | | hfe hfb* | fab fT (Mc) | Cob (pF) | $r_{bb'}$ $h_{ie(real)}$* (Ω) | CASE STYLE |
|---|---|---|---|---|---|---|---|---|---|---|---|---|---|---|---|---|---|---|
| | | | | | | | | | $V_{CB}$(V) | hFE | $V_{CE}$(V) | $I_C$(mA) | $V_{CB}$(V) | $I_E$(mA) | | | | | |
| 2SB 511 | PA | Si.E | −35 | −5 | −1.5A | 10W (Tc = 25°C) | 150 | −100 | −20 | 90 | −2 | −1A | | | | | | F-162 |
| 2SB 512 | " | Si.EMe | −60 | −8 | −3A | 25W (Tc = 25°C) | 150 | −30 | −20 | 60 | −3 | −1A | | | | | | F-178 |
| 2SB 513 | " | " | −60 | −8 | −3A | 25W (Tc = 25°C) | 150 | −30 | −20 | 60 | −3 | −1A | | | | | | F-179 |
| 2SB 514 | " | Si.E | −50 | −5 | −2A | 20W (Tc = 25°C) | 150 | −100 | −20 | 90 | −2 | −1A | | | | | | F-162 |
| 2SB 515 | " | " | −50 | −5 | −2A | 20W (Tc = 25°C) | 150 | −100 | −20 | 90 | −2 | −1A | | | | | | F-163 |
| 2SB 516 | " | Ge.A | −20 | | −100 | 150 | 85 | −25 | −12 | 110 | −1.5 | −50 | | | | | | F-12C |
| 2SB 517 | | | | | | | | | | | | | | | | | | |
| 2SB 518 | PA | Si.EMe | −90 | −8 | −7A | 60W (Tc = 25°C) | 150 | −100 | −50 | 50 | −2 | −1A | | | | | | F-103 |
| 2SB 519 | " | " | −110 | −8 | −10A | 80W (Tc = 25°C) | 150 | −100 | −50 | 50 | −2 | −1A | | | | | | F-102 |
| 2SB 520 | " | " | −140 | | −12A | 100W (Tc = 25°C) | 150 | −100 | −50 | 50 | −2 | −1A | | | | | | F-102 |
| 2SB 521 | " | " | −60 | | −5A | 25W (Tc = 25°C) | 150 | −100 | −50 | 50 | −2 | −2.5A | | | | | | F-240 |
| 2SB 522 | " | " | −60 | | −5A | 25W (Tc = 25°C) | 150 | −100 | −50 | 50 | −2 | −2.5A | | | | | | F-241 |
| 2SB 523 | " | Si.EP | −40 | −5 | −2A | 10W (Tc = 25°C) | 150 | −1 | −25 | 120 | −4 | −500 | | | | | | F-180 |
| 2SB 524 | " | " | −60 | −5 | −1.5A | 10W | 150 | −1 | −25 | 100 | −4 | −500 | | | | | | F-180 |
| 2SB 525 | " | " | −30 | −4 | −1A | 800 | 135 | −1 | −25 | 150 | −1 | −500 | | | | 100* | | F-242 |
| 2SB 526 | " | " | −90 | −5 | −800 | 10W (Tc = 25°C) | 150 | −10 | −25 | 100 | −4 | −300 | | | | | | F-180 |
| 2SB 527 | " | " | −110 | −5 | −800 | 10W (Tc = 25°C) | 150 | −10 | −25 | 100 | −4 | −300 | | | | | | F-180 |
| 2SB 528 | " | " | −130 | −5 | −800 | 10W (Tc = 25°C) | 150 | −10 | −25 | 100 | −4 | −300 | | | | | | F-180 |
| 2SB 529 | " | " | −40 | −5 | −2A | 10W (Tc = 25°C) | 150 | −1 | −25 | 120 | −4 | −500 | | | | | | F-180 |
| 2SB 530 | " | Si.EMe | −110 | −5 | −8A | 80W (Tc = 25°C) | 150 | −100 | −50 | 80 | −5 | −1A | | | | | | F-102 |
| 2SB 531 | " | " | −90 | −5 | −6A | 50W (Tc = 25°C) | 150 | −100 | −50 | 40-240 | −5 | −1A | −5 | 1A | | 8* | 180 | F-102 |
| 2SB 532 | " | " | −80 | −5 | −5A | 60W (Tc = 25°C) | 150 | −1mA | −50 | 100 | −4 | −1A | −10 | 500 | | 10* | | F-102 |
| 2SB 533 | " | GeA | −20 | −12 | −2A | 6W (Tc = 25°C) | 85 | −200 | −20 | 150 | $V_{CB}$ = 0V | IE2A | −2 | 100 | | 1.2* | | F-84C |
| 2SB 534 | " | " | −20 | −6 | −500 | 200 | 85 | −25 | −12 | 150 | −1 | −150 | | | | | | F-12A |
| 2SB 535 | " | " | −35 | | −1A | 5W (Tc = 25°C) | 85 | −20 | −12 | 100 | -0.5 | −500 | | | | | | F-84B |
| 2SB 536 | PA | SiE | −140 | −5 | −1.5A | 20W (Tc = 25°C) | 150 | −1 | −120 | 90 | −5 | −300 | | | | | | F-151 |
| 2SB 537 | " | " | −140 | −5 | −1.5A | 20W (Tc = 25°C) | 150 | −1 | −120 | 90 | −5 | −300 | | | | | | F-152 |
| 2SB 538 | PA.SW | GeA | −65 | −30 | −15A | 75W (Tc = 25°C) | 100 | −10mA | −65 | 100 | −2 | −10A | | | | | | F-102 |
| 2SB 539 | PA | Si.TMe | −130 | −6 | −10A | 100W (Tc = 25°C) | 150 | −100 | −120 | 75 | −5 | −2A | | | | | | F-102 |
| 2SB 540 | " | GeA | −50 | −12 | −2A | 6W (Tc = 25°C) | 85 | −100 | −25 | 120 | −2 | −3A | −1 | 100 | | 1.4 | | F-245 |
| 2SB 541 | PA | Si.TMe | −110 | −6 | −8A | 80W (Tc = 25°C) | 150 | −100 | −100 | 80 | −5 | −1A | | | | | | F-102 |
| 2SB 542 | " | Si.EP | −20 | −5 | −300 | 300 | 125 | −1 | −20 | 150 | −2 | −150 | −6 | 10 | | 150* | | F-138B |
| 2SB 543 | | | | | | | | | | | | | | | | | | |
| 2SB 544 | PA | Si.EP | −25 | −5 | −1A | 750 | 125 | −1 | −20 | 150 | −2 | −50 | | | | | | F-294 |
| 2SB 545 | | | | | | | | | | | | | | | | | | |
| 2SB 546 | PA | Si.TMe | −200 | −5 | −2A | 20W (Tc = 25°C) | 150 | −50 | −150 | 90 | −10 | −400 | | | | | | F-268 |
| 2SB 547 | " | " | −200 | −5 | −2A | 20W (Tc = 25°C) | 150 | −50 | −150 | 90 | −10 | −400 | | | | | | F-267 |
| 2SB 548 | | Si.E | −100 | −5 | −800 | 5W (Tc = 25°C) | 150 | −1 | −80 | 80 | −5 | −200 | | | | | | F-225 |
| 2SB 549 | " | " | −100 | −5 | −800 | 5W (Tc = 25°C) | 150 | −1 | −80 | 80 | −5 | −200 | | | | | | F-225 |
| 2SB 550 | | | | | | | | | | | | | | | | | | |
| 2SB 551 | | | | | | | | | | | | | | | | | | |
| 2SB 552 | PA | Si.TMe | −220 | −5 | −15A | 150W (Tc = 25°C) | 150 | −100A | −220 | 50 | −5 | −5A | | | | | | F-102 |
| 2SB 553 | | | | | | | | | | | | | | | | | | |
| 2SB 554 | PA | Si.TMe | −160 | −5 | −15A | 150W (Tc = 25°C) | 150 | −100 | −80 | 40-140 | −5 | −2A | −5 | 2A | | 6* | 450 | F-102 |
| 2SB 555 | " | " | −140 | −5 | −12A | 100W (Tc = 25°C) | 150 | −100 | −60 | 40-140 | −5 | −2A | −5 | 2A | | 6* | 330 | F-102 |
| 2SB 556 | " | " | −120 | −5 | −12A | 100W (Tc = 25°C) | 150 | −100 | −60 | 40-140 | −5 | −2A | −5 | 1A | | 6* | 330 | F-102 |
| 2SB 557 | " | " | −120 | −5 | −8A | 80W (Tc = 25°C) | 150 | −100 | −60 | 40-140 | −5 | −1A | −5 | 1A | | 7* | 280 | F-102 |
| 2SB 558 | " | " | −100 | −5 | −7A | 60W (Tc = 25°C) | 150 | −100 | −50 | 40-140 | −5 | −1A | −5 | 1A | | 7* | 220 | F-102 |
| 2SB 559 | | | | | | | | | | | | | | | | | | |
| 2SB 560 | PA | Si.EP | −100 | −5 | −700 | 750 | 125 | −1 | −20 | 150 | −5 | −50 | | | | | | F-294 |
| 2SB 561 | PA | " | −25 | −5 | −700 | 500 | 150 | −1 | −20 | 130 | −1 | −150 | | | | | | F-138 |
| 2SB 562 | " | " | −25 | −5 | −1A | 900 | 150 | −1 | −20 | 140 | −2 | −500 | | | | | | F-251 |
| 2SB 563 | | | | | | | | | | | | | | | | | | |
| 2SB 564 | PA | Si.E | −30 | −5 | −1A | 800 | 150 | −0.1 | −30 | 200 | −1 | −100 | | | | 110* | 36 | F-278 |
| 2SB 565 | | Si.T | −50 | −4 | −4A | 40W (Tc = 25°C) | 150 | −100 | −20 | 100 | −4 | −1A | | | | | | F-267 |
| 2SB 566 | | " | −50 | −4 | −4A | 40W (Tc = 25°C) | 150 | −100 | −20 | 100 | −4 | −1A | | | | | | F-268 |
| 2SB 567 | | " | −200 | −6 | 2A | 30W (Tc = 25°C) | 150 | −1 | −120 | 150 | −4 | −50 | | | | | | F-267 |
| 2SB 568 | | " | −200 | −6 | −2A | 30W (Tc = 25°C) | 150 | −1 | −120 | 150 | −4 | −50 | | | | | | F-268 |
| 2SB 569 | | Si.E | −40 | −5 | −4A | 40W (Tc = 25°C) | 150 | −500 | −40 | 6000 | −3 | −2A | | | | | | F-252 |
| 2SB 570 | " | " | −60 | −5 | −4A | 40W (Tc = 25°C) | 150 | −500 | −60 | 6000 | −3 | −2A | | | | | | F-252 |

**Pin Configurations are 1. Emitter, 2. Base, 3. Collector, 4. Shield, unless otherwise specified. (Outline Dimensions: mm)**

| TYPE NO. | USES | MATERIAL STRUCTURE | $V_{CBO}$ (V) | $V_{EBO}$ (V) | Ic (mA) | Pd (mW) | Tj (°C) | $I_{CBO}$ (uA) | VALUE OF DC/PULSE $V_{CB}$(V) | hFE | $V_{CE}$(V) | $I_C$(mA) | BIAS $V_{CB}$(V) | $I_e$(mA) | hfe hfb* | fab fT (Mc) | Cob (pF) | $r_{bb'}$ $h_{ie(real)}$* (Ω) | CASE STYLE |
|---|---|---|---|---|---|---|---|---|---|---|---|---|---|---|---|---|---|---|---|
| 2SB 571 | PA | Si.E | −80 | −5 | −4A | 40W (Tc = 25°C) | 150 | −500 | −80 | 6000 | −3 | −2A | | | | | | | F-252 |
| 2SB 572 | " | " | −40 | −5 | −3A | 30W (Tc = 25°C) | 150 | −100 | −40 | 50 | −1 | −500 | | | | | | | F-252 |
| 2SB 573 | " | " | −60 | −5 | −3A | 30W (Tc = 25°C) | 150 | −100 | −60 | 50 | −1 | −500 | | | | | | | F-252 |
| 2SB 574 | " | " | −80 | −5 | −3A | 30W (Tc = 25°C) | 150 | −100 | −80 | 50 | −1 | −500 | | | | | | | F-252 |
| 2SB 575 | " | " | −40 | −5 | −4A | 40W (Tc = 25°C) | 150 | −100 | −40 | 50 | −2 | −1.5A | | | | | | | F-252 |
| 2SB 576 | " | " | −60 | −5 | −4A | 40W (Tc = 25°C) | 150 | −100 | −60 | 50 | −2 | −1.5A | | | | | | | F-252 |
| 2SB 577 | " | " | −80 | −5 | −4A | 40W (Tc = 25°C) | 150 | −100 | −80 | 50 | −2 | −1.5A | | | | | | | F-252 |
| 2SB 578 | " | " | −70 | −5 | −10A | 90W (Tc = 25°C) | 150 | −1mA | −70 | 40 | −4 | −4A | | | | | | | F-253 |
| 2SB 579 | " | " | −60 | −5 | −5A | 75W (Tc = 25°C) | 150 | −100 | −60 | 40 | −2 | −2.5A | | | | | | | F-253 |
| 2SB 580 | " | " | −80 | −5 | −5A | 75W (Tc = 25°C) | 150 | −100 | −80 | 40 | −2 | −2.5A | | | | | | | F-253 |
| 2SB 581 | " | " | −100 | −5 | −5A | 75W (Tc = 25°C) | 150 | −100 | −100 | 40 | −2 | −2.5A | | | | | | | F-253 |
| 2SB 582 | " | " | −60 | −5 | −8A | 75W (Tc = 25°C) | 150 | −500 | −60 | 3000 | −4 | −4A | | | | | | | F-253 |
| 2SB 583 | " | " | −80 | −5 | −8A | 75W (Tc = 25°C) | 150 | −500 | −80 | 3000 | −4 | −4A | | | | | | | F-253 |
| 2SB 584 | " | " | −100 | −5 | −8A | 75W (Tc = 25°C) | 150 | −500 | −100 | 3000 | −4 | −3A | | | | | | | F-253 |
| 2SB 585 | " | " | −60 | −5 | −8A | 100W (Tc = 25°C) | 200 | −500 | −60 | 3000 | −3 | −4A | | | | | | | F-102 |
| 2SB 586 | " | " | −80 | −5 | −8A | 100W (Tc = 25°C) | 200 | −500 | −80 | 3000 | −4 | −8A | | | | | | | f-102 |
| 2SB 587 | " | " | −60 | −5 | −12A | 150W (Tc = 25°C) | 200 | −500 | −50 | 3000 | −3 | −6A | | | | | | | F-102 |
| 2SB 588 | " | " | −80 | −5 | −12A | 150W (Tc = 25°C) | 200 | −500 | −80 | 3000 | −3 | −6A | | | | | | | F-102 |
| 2SB 589 | " | " | −100 | −5 | −12A | 150W (Tc = 25°C) | 200 | −500 | −100 | 3000 | −3 | −6A | | | | | | | F-102 |
| 2SB 590 | | | | | | | | | | | | | | | | | | | |
| 2SB 591 | | | | | | | | | | | | | | | | | | | |
| 2SB 592 | | | | | | | | | | | | | | | | | | | |
| 2SB 593 | | | | | | | | | | | | | | | | | | | |
| 2SB 594 | | | | | | | | | | | | | | | | | | | |
| 2SB 595 | PA | Si.TMe | −100 | −5 | −5A | 40W (Tc = 25°C) | 150 | −100 | −100 | 40-240 | −5 | −1A | −5 | 1A | | 4* | 100 | | F-119 |
| 2SB 596 | " | " | −80 | −5 | −4A | 30W (Tc = 25°C) | 150 | −30 | −80 | 120 | −5 | −500 | | | | | | | F-268 |
| 2SB 597 | | | | | | | | | | | | | | | | | | | |
| 2SB 598 | | | | | | | | | | | | | | | | | | | |
| 2SB 599 | | | | | | | | | | | | | | | | | | | |
| 2SB 600 | | | | | | | | | | | | | | | | | | | |
| 2SB 601 | | | | | | | | | | | | | | | | | | | |
| 2SB 602 | | | | | | | | | | | | | | | | | | | |
| 2SB 603 | | | | | | | | | | | | | | | | | | | |
| 2SB 604 | PA | Si.TMe | −70 | −5 | −4A | 30W (Tc = 25°C) | 150 | −1mA | −70 | 120 | −5 | −500 | | | | | | | F-268 |
| 2SB 605 | " | Si.E | −60 | −5 | −700 | 800 | 150 | −0.1 | −60 | 200 | −1 | −100 | | | | 120* | 25 | | F-278 |
| 2SB 606 | SW | Si.EP | −250 | −5 | −500 | 800 | 175 | −0.5 | −200 | 70 | −10 | −10 | | | | | | | F-84C |
| 2SB 607 | PA | Ge.A | −30 | −10 | −1A | 3W (Tc = 25°C) | 85 | −10 | −10 | 60 | −0.5 | −1A | −2 | 100 | | $f_{ae}$ 15kHz | | | F-84C |
| 2SB 608 | | | | | | | | | | | | | | | | | | | |
| 2SB 609 | | | | | | | | | | | | | | | | | | | |
| 2SB 610 | | | | | | | | | | | | | | | | | | | |
| 2SB 611 | | | | | | | | | | | | | | | | | | | |
| 2SB 612 | | | | | | | | | | | | | | | | | | | |
| 2SB 613 | | | | | | | | | | | | | | | | | | | |
| 2SB 614 | | | | | | | | | | | | | | | | | | | |
| 2SB 615 | | | | | | | | | | | | | | | | | | | |
| 2SB 616 | PA | Si.E | −100 | −5 | −5A | 60W (Tc = 25°C) | 150 | −10 | −80 | 80 | −5 | −1A | | | | | | | F-295 |
| 2SB 617 | " | Si.TMe | −120 | −5 | −6A | 70W (Tc = 25°C) | 150 | −50 | −100 | 80 | −5 | −1A | | | | | | | F-295 |
| 2SB 618 | " | " | −150 | −5 | −7A | 80W (Tc = 25°C) | 150 | −50 | −120 | 80 | −5 | −1A | | | | | | | F-295 |
| 2SB 619 | " | Ge.A | −32 | −10 | −1.3A | 300 | 90 | −10 | −10 | 115 | −0.5 | −300 | | | | $f_{ae}$ 15kHz | NF = 10dB ($f$ = 1kHz) | | F-12 |
| 2SB 620 | " | Si.EP | −25 | −5 | −50 | 250 | 125 | −1 | −10 | 250 | −5 | −2 | −10 | 1 | | 100* | 2.7 | 70 | F-138 |
| 2SB 621 | AF | " | −30 | −5 | −1A | 600 | 135 | -0.001 | −20 | 160 | −10 | −500 | −5 | 1 | | 200* | 20 | | F-138 |
| 2SA 622 | | | | | | | | | | | | | | | | | | | |
| 2SA 623 | | | | | | | | | | | | | | | | | | | |
| 2SB 624 | | | | | | | | | | | | | | | | | | | |
| 2SA 625 | | | | | | | | | | | | | | | | | | | |
| 2SB 626 | | | | | | | | | | | | | | | | | | | |
| 2SB 627 | PA | Ge.A | −40 | −14 | −10A | 13W (Tc = 25°C) | 85 | −1mA | −40 | 150 | $\frac{V_{CB}}{-0.5}$ | −3A | | | | | | | F-83 |
| 2SA 628 | " | Si.E | −160 | −5 | −1.5A | 20W (Tc = 25°C) | 150 | −1 | −120 | 80 | −5 | −300 | | | | | | | F-268 |
| 2SB 629 | | | | | | | | | | | | | | | | | | | |
| 2SB 630 | PA | Si.E | −200 | −5 | −2A | 25W (Tc = 25°C) | 150 | −1 | −150 | 80 | −10 | −500 | | | | | | | F-268 |

Pin Configurations are 1. Emitter, 2. Base, 3. Collector, 4. Shield, unless otherwise specified. (Outline Dimensions: mm)

| TYPE NO. | USES | MATERIAL STRUCTURE | $V_{CBO}$ (V) | $V_{EBO}$ (V) | $I_C$ (mA) | $P_d$ (mW) | $T_j$ (°C) | $I_{CBO}$ (uA) | VALUE OF DC/PULSE | | | BIAS | | hfe hfb* | fab fT (Mc) | Cob (pF) | $r_{bb'}$ $h_{ie(real)}$* (Ω) | CASE STYLE |
|---|---|---|---|---|---|---|---|---|---|---|---|---|---|---|---|---|---|---|
| | | | | | | | | | $V_{CB}$(V) | hFE | $V_{CE}$(V) | $I_C$(mA) | $V_{CB}$(V) | $I_e$(mA) | | | | | |
| 2SB 631 | PA | Si.EP | −100 | −5 | −1A | 8W (Tc = 25°C) | 150 | −1 | −50 | 150 | −5 | −50 | | | | | | | F-296 |
| 2SB 632 | " | " | −25 | −5 | −2A | 10W (Tc = 25°C) | 150 | −1 | −20 | 150 | −2 | −500 | | | | | | | F-296 |
| 2SB 633 | | | | | | | | | | | | | | | | | | | |
| 2SB 634 | | | | | | | | | | | | | | | | | | | |
| 2SB 635 | AF | Ge.A | −32 | −10 | −150 | 150 | 85 | −12 | −10 | 180 | $\frac{V_{CB}}{-0.5}$ | −2 | −2 | 3 | | 0.7 | | | F-297 |
| 2SB 636 | PA | " | −32 | −10 | −150 | 150 | 85 | −12 | −10 | 90 | $\frac{V_{CB}}{-0.5}$ | −100 | −6 | 1 | | 0.7 | | | F-297 |
| 2SB 637 | | | | | | | | | | | | | | | | | | | |
| 2SB 638 | | | | | | | | | | | | | | | | | | | |
| 2SB 638 | | | | | | | | | | | | | | | | | | | |
| 2SB 640 | PA | Ge.A | −25 | −6 | −300 | 150 | 85 | −20 | −12 | 150 | $\frac{V_{CB}}{-0.5}$ | −150 | | | | | | | F-297 |
| 2SB 641 | | | | | | | | | | | | | | | | | | | |
| 2SB 642 | | | | | | | | | | | | | | | | | | | |
| 2SB 643 | | | | | | | | | | | | | | | | | | | |
| 2SB 644 | | | | | | | | | | | | | | | | | | | |
| 2SB 645 | | | | | | | | | | | | | | | | | | | |
| 2SB 646 | | | | | | | | | | | | | | | | | | | |
| 2SA 647 | | | | | | | | | | | | | | | | | | | |
| 2SB 648 | | | | | | | | | | | | | | | | | | | |
| 2SB 649 | | | | | | | | | | | | | | | | | | | |
| 2SB 650 | | | | | | | | | | | | | | | | | | | |
| 2SB 651 | | | | | | | | | | | | | | | | | | | |
| 2SB 652 | | | | | | | | | | | | | | | | | | | |
| 2SB 653 | | | | | | | | | | | | | | | | | | | |
| 2SB 654 | | | | | | | | | | | | | | | | | | | |
| 2SB 655 | | | | | | | | | | | | | | | | | | | |
| 2SB 656 | | | | | | | | | | | | | | | | | | | |
| 2SB 657 | | | | | | | | | | | | | | | | | | | |
| 2SB 658 | | | | | | | | | | | | | | | | | | | |
| 2SB 659 | | | | | | | | | | | | | | | | | | | |
| 2SB 660 | | | | | | | | | | | | | | | | | | | |

**Pin Configurations are 1. Emitter, 2. Base, 3. Collector, 4. Shield, unless otherwise specified. (Outline Dimensions: mm)**

| TYPE NO. | USES | MATERIAL STRUCTURE | $V_{CBO}$ (V) | $V_{EBO}$ (V) | $I_C$ (mA) | Pd (mW) | Tj (°C) | $I_{CBO}$ (uA) | VALUE OF DC/PULSE | | | | BIAS | | hfe hfb* | fab fT (Mc) | Cob (pF) | $r_{bb'}$ $h_{ie(real)}$* (Ω) | CASE STYLE |
|---|---|---|---|---|---|---|---|---|---|---|---|---|---|---|---|---|---|---|---|
| | | | | | | | | $V_{CB}$(V) | hFE | $V_{CE}$(V) | $I_C$(mA) | $V_{CB}$(V) | $I_e$(mA) | | | | | |
| 2SC 11 | SW | Ge.A | 18 | 12 | 24 | 55 | 75 | 9 | 12 | 44 | 1 | 24 | 6 | −1 | | 6 | <20 | <200 | F-12A |
| 2SC 12 | " | Si.Me | 60 | 8 | 250 | 180 | 150 | 10 | 30 | 20 | 10 | 200 | | | | | | | F-84A |
| 2SC 13 | " | Ge.A | 18 | 12 | 40 | 65 | 75 | 9 | 12 | 48 | 1 | 24 | 6 | −1 | | 9 | | | F-84A |
| 2SC 14 | " | " | 18 | 12 | 40 | 65 | 75 | 9 | 12 | 48 | 1 | 24 | 6 | −1 | | 15 | | | F-84A |
| 2SC 15 | RF | Si.Me | 30 | 5 | 50 | 750 | 175 | 1 | 30 | 30 | 5 | 10 | 20 | −10 | 21 | 150* | 2 | 100* | F-84C |
| 2SC 16 | SW | Si.P | 25 | 5 | 30 | 250 | 175 | 2.5 | 15 | 25 | 1 | 10 | | | | | <7 | | F-49C |
| 2SC 16A | " | " | 25 | 5 | 50 | 250 | 175 | 1 | 15 | 30 | 1 | 10 | | | | | | | F-49C |
| 2SC 17 | RF | " | 20 | | 50 | 250 | 175 | 2.5 | 12 | | | | 6 | −2 | 30 | 150* | 4 | 90 | F-49C |
| 2SC 17A | " | " | 25 | | 30 | 250 | 175 | 1 | 15 | | | | 10 | −10 | 30 | 150* | 4 | 30 | F-49C |
| 2SC 18 | " | " | 25 | 2 | 30 | 250 | 175 | 0.1 | 6 | 12 | 0.3 | 0.1 | 6 | −1 | 20 | 50 | 6 | 40 | F-49C |
| 2SC 19 | SW | " | 40 | 5 | 400 | 600 | 150 | 1 | 30 | 50 | 2 | 150 | | | | | 10* | 30 | F-84A |
| 2SC 20 | RF | " | 40 | 3 | 400 | 600 | 150 | 1 | 30 | | | | 10 | −10 | ·0.98* | 90 | 30 | 25 | F-84A |
| 2SC 21 | SW | " | 60 | 5.5 | 2A | 60W ($T_C$=25°C) | 150 | 1mA | 30 | 25 | 10 | 1A | 30 | −300 | | 6* | 450 | | F-102 |
| 2SC 22 | RF | Si.EP | 75 | 5 | 600 | 13W ($T_C$=25°C) | 175 | 2 | 50 | 50 | 10 | 150 | 10 | −50 | 50 | 110* | 20 | | F-83 |
| 2SC 23 | " | " | 75 | 5 | 500 | 13W ($T_C$=25°C) | 175 | 5 | 50 | 50 | 10 | 150 | 10 | −50 | 50 | 110* | 20 | | F-83 |
| 2SC 24 | " | " | 100 | 5 | 500 | 13W ($T_C$=25°C) | 175 | 5 | 70 | 50 | 10 | 150 | 10 | −50 | 50 | 110 | 20 | | F-83 |
| 2SC 25 | RF.IF.Conv. Mix Osc. | Si.Me | 60 | | 60 | 500 | 150 | 10 | 12 | | | | 12 | −10 | 50 | 70 | 10 | 70 | F-84B |
| 2SC 26 | RF | " | 60 | | 100 | 500 | 150 | 1 | 30 | | | | 10 | −10 | 50 | 150 | 4 | 70 | F-79 |
| 2SC 27 | " | Si.EP | 60 | 5 | 100 | 650 | 175 | 1 | 30 | | | | 6 | −1 | 80 | 350* | 4 | 50* | F-84C |
| 2SC 28 | " | " | 40 | 5 | 50 | 225 | 150 | 1 | 10 | | | | 10 | −10 | 30 | 100* | 4 | 50 | F-84C |
| 2SC 29 | " | " | 40 | 5 | 25 | 115 | 150 | 1 | 10 | | | | 10 | −10 | 30 | 100* | 4 | 50 | F-84C |
| 2SC 30 | " | Si.EP | 60 | 5 | 80 | 500 | 150 | 0.1 | 30 | | | | 10 | −10 | 45 | 280* | 4 | 35 | F-84A |
| 2SC 31 | RF.PA | " | 60 | 5 | 200 | 750 | 175 | 0.1 | 30 | | | | 10 | −10 | 35 | 200* | 4 | 35 | F-84A |
| 2SC 32 | " | " | 60 | 5 | 200 | 750 | 175 | 0.1 | 30 | | | | 10 | −10 | 60 | 250* | 4 | 40 | F-84A |
| 2SC 32A | " | " | 60 | 5 | 200 | 750 | 175 | 1 | 30 | | | | 10 | −10 | 60 | 250* | 4 | 40 | F-84A |
| 2SC 33 | RF | " | 45 | 3 | 150 | 150 | 150 | 0.1 | 20 | | | | 10 | −5 | 55 | 250* | 3.5 | 40 | F-50C |
| 2SC 34 | SW | Ge.A | 20 | 20 | 250 | 140 | 75 | 3 | 5 | 30 | 0.5 | 200 | 5 | −3 | | 6* | 20 | | F-20 |
| 2SC 35 | " | " | 20 | 20 | 400 | 140 | 75 | 3 | 5 | 65 | 0.5 | 200 | 5 | −3 | | 12* | 20 | | F-20 |
| 2SC 36 | " | " | 20 | 20 | 400 | 140 | 75 | 3 | 5 | 100 | 0.5 | 200 | 5 | −3 | | 20* | 20 | | F-20 |
| 2SC 37 | RF.IF.Conv. Mix. PA | Si.EP | 40 | 3 | 200 | 200 | 175 | 0.1 | 20 | | | | 10 | −10 | 50 | 200* | 4 | 50 | F-84A |
| 2SC 38 | RF.IF.Conv. Mix. Osc. | Si.EP | 40 | 3 | 200 | 750 | 175 | 0.1 | 30 | | | | 10 | −10 | 50 | 200* | 4 | 50 | F-84C |
| 2SC 39 | RF | Si.Me | 25 | 3 | 50 | 250 | 150 | 0.1 | 10 | | | | 6 | −1 | 50 | 500* | 2.3 | 80* | F-49C |
| 2SC 39A | " | Si.P | 25 | 3 | 50 | 250 | 150 | 0.1 | 10 | | | | 6 | −3 | 120 | 350* | 3 | 65* | F-49C |
| 2SC 40 | " | Si.Me | 25 | 3 | 50 | 250 | 150 | 0.1 | 10 | | | | 6 | −1 | 50 | 750* | 2.3 | 80* | F-49C |
| 2SC 41 | " | " | 150 | | 5A | 50W ($T_C$=25°C) | 150 | 60mA | 150 | 28 | 10 | 1A | 10 | −0.5A | | 20 | 250 | 5 | F-103 |
| 2SC 42 | " | " | 150 | 6 | 5A | 50W ($T_C$=25°C) | 150 | 60mA | 150 | 28 | 10 | 1A | 10 | −0.5A | | 20 | 250 | 5 | F-103 |
| 2SC 42A | " | " | 200 | 6 | 5A | 50W ($T_C$=25°C) | 150 | 30 | 50 | 40 | 10 | 1A | 10 | −0.5A | | 20 | 250 | | F-103 |
| 2SC 43 | " | " | 100 | 6 | 5A | 50W ($T_C$=25°C) | 150 | 60mA | 100 | 28 | 10 | 1A | 10 | −0.5A | | 20 | 250 | 5 | F-103 |
| 2SC 44 | " | " | 50 | 6 | 5A | 50W ($T_C$=25°C) | 150 | 60mA | 50 | 28 | 10 | 1A | 10 | −0.5A | | 20 | 25 | 5 | F-103 |
| 2SC 45 | RF.IF.Conv Mix.Osc | Si.P | 45 | | 100 | 500 | 150 | 1 | 30 | 50 | 2 | 10 | 10 | −10 | 50 | 160* | 4 | 130* | F-84A |
| 2SC 46 | RF.IF.Conv Mix.Osc.SW | Si.Me | 60 | 5 | 300 | 600 | 150 | 0.1 | 10 | 50 | 1 | 10 | 6 | −1 | 50 | 180* | 15 | 35* | F-84C |
| 2SC 47 | " | " | 40 | 5 | 300 | 600 | 150 | 1 | 6 | 50 | 1 | 10 | 6 | −1 | 50 | 180* | 15 | 35* | F-84C |
| 2SC 48 | " | " | 120 | 5 | 300 | 600 | 150 | 0.1 | 10 | 50 | 1 | 10 | 6 | −1 | 50 | 180* | 15 | 35* | F-84C |
| 2SC 49 | RF.IF.Conv Mix.Osc | Si.EP | 120 | 6 | 300 | 800 | 175 | 0.5 | 60 | 60 | 10 | 150 | 10 | −50 | 60 | 175* | 9 | | F-84A |
| 2SC 50 | RF.Conv Mix.Osc | Ge.A | 20 | 20 | 200 | 100 | 75 | 3 | 5 | | | | 6 | −1 | 45 | 12 | 20 | 100 | F-20 |
| 2SC 51 | RF.IF.Conv. Mix.Osc.PA | Si.Me | 60 | 5 | 300 | 1W | 150 | 0.1 | 10 | 50 | 1 | 10 | 6 | −1 | 50 | 180* | 15 | 35 | F-80 |
| 2SC 52 | " | Si.P | 40 | 5 | 100 | 500 | 150 | 0.03 | 10 | 50 | 1 | 10 | 6 | −1 | 50 | 350* | 4 | 40* | F-84C |
| 2SC 53 | RF.IF.Conv Mix.Osc.Pa | " | 25 | 3 | 100 | 600 | 150 | 0.5 | 10 | 50 | 1 | 10 | 6 | −1 | 50 | 300* | 4 | 40* | F-84C |
| 2SC 54 | RF.IF.Conv. Mix.Osc.SW | " | 40 | 5 | 100 | 300 | 150 | 0.03 | 10 | 50 | 1 | 10 | 6 | −1 | 50 | 350 | 4 | 40* | F-49C |
| 2SC 55 | RF.IF.Conv Mix.Osc.PA | " | 25 | 3 | 100 | 360 | 150 | 0.5 | 10 | 50 | 1 | 10 | 6 | −1 | 50 | 300* | 4 | 40* | F-49C |
| 2SC 56 | RF.Conv Mix.Osc | " | 20 | 3 | 25 | 200 | 120 | 2 | 12 | | | | 6 | −2 | 80 | 180* | 2.3 | 80* | F-30 |
| 2SC 57 | PA | Si.Me | 75 | 4 | 500 | 13W ($T_C$=25°C) | 175 | 30 | 30 | 30 | 10 | 150 | | | | 110* | 22 | | F-83 |
| 2SC 58 | RF.IF.Conv Mix.Osc.PA | " | 60 | 1.5 | 60 | 600 | 175 | 2 | 12 | 50 | 12 | 10 | 12 | −10 | 50 | 250* | 2.5 | 170 | F-84A |
| 2SC 58A | " | " | 140 | 1.5 | 60 | 600 | 175 | 2 | 12 | 50 | 12 | 10 | 12 | −10 | 50 | 250* | 2.5 | 170 | F-84A |
| 2SC 59 | RF.IF.Conv Mix.Osc | Si.EP | 120 | 6 | 300 | 800 | 175 | 0.5 | 60 | 35 | 10 | 150 | 10 | −50 | 35 | 140* | 9 | | F-84A |
| 2SC 60 | RF | Ge.A | 20 | 10 | 20 | 100 | 85 | 15 | 20 | | | | 6 | −1 | 50 | 5 | 15 | 80 | F-12A |
| 2SC 61 | RF.IF.Conv Mix.Osc.SW | Si.Me | 30 | 5 | 300 | 1.2W | 175 | 1 | 10 | 50 | 1 | 10 | 6 | −1 | 50 | 180* | 15 | 35 | F-80 |
| 2SC 62 | SW | Si.P | 40 | 5 | 50 | 360 | 175 | 0.025 | 15 | 100 | 1 | 10 | 10 | −10 | | 300* | 5.5 | | F-49C |
| 2SC 63 | " | Si.Me | 25 | 3 | 50 | 300 | 150 | 1 | 15 | 40 | 1 | 10 | 10 | −10 | | 400* | 4.5 | | F-49C |
| 2SC 64 | RF | " | 80 | 2 | 50 | 600 | 175 | 1.5 | 20 | | | | 20 | −5 | 50 | 100* | 5 | 80 | F-84B |

**Pin Configurations are 1. Emitter, 2. Base, 3. Collector, 4. Shield, unless otherwise specified. (Outline Dimensions: mm)**

| TYPE NO. | USES | MATERIAL STRUCTURE | $V_{CBO}$ (V) | $V_{EBO}$ (V) | Ic (mA) | Pd (mW) | Tj (°C) | $I_{CBO}$ (uA) | VALUE OF DC/PULSE | | | | BIAS | | hfe hfb* | fab fT (Mc) | Cob (pF) | $r_{bb'}$ $h_{ie(real)}$* (Ω) | CASE STYLE |
|---|---|---|---|---|---|---|---|---|---|---|---|---|---|---|---|---|---|---|---|
| | | | | | | | | | $V_{CB}$(V) | hFE | $V_{CE}$(V) | $I_C$(mA) | $V_{CB}$(V) | $I_e$(mA) | | | | | |
| 2SC 65 | RF | Si.Me | 150 | 4 | 50 | 600 | 175 | 15 | 150 | 30 | 20 | 5 | 20 | −5 | 20 | 200* | <10 | ∠ 200 | F-84B |
| 2SC 66 | " | " | 150 | 2 | 50 | 600 | 175 | 1.5 | 20 | | | | 20 | −5 | 70 | 130* | 5 | 100 | F-84B |
| 2SC 67 | SW | Si.EP | 40 | 5 | 200 | 360 | 175 | 0.1 | 15 | 80 | 1 | 10 | | | | | | | F-49C |
| 2SC 68 | " | " | 25 | 5 | 200 | 300 | 150 | 1 | 15 | 40 | 1 | 10 | 10 | −10 | | 400* | 4.5 | 50 | F-49C |
| 2SC 69 | RF.IF.Conv. Mix.Osc | " | 120 | 6 | 300 | 800 | 175 | 0.5 | 60 | 50 | 1 | 150 | 10 | −50 | 50 | 160* | 9 | | F-84A |
| 2SC 70 | RF | Si.TMe | 180 | | 20 | 800 | 150 | 1 | 30 | | | | 30 | −2 | 45 | 125* | 1.8 | 100 | F-84A |
| 2SC 71 | SW | Ge.A | 18 | 12 | 200 | 150 | 85 | 7 | 12 | 100 | 0.5 | 100 | | | | | | | F-84A |
| 2SC 72 | " | " | 18 | 12 | 200 | 150 | 85 | 7 | 12 | 100 | 0.5 | 100 | | | | | | | F-84A |
| 2SC 73 | RF.Conv.Mix Osc. | Ge.G | 15 | | 5 | 30 | 75 | 8 | 15 | | | | 6 | −1 | -0.976* | 20 | 2 | | F-18 |
| 2SC 74 | RF | Si.P | 30 | 5 | 100 | 360 | 175 | 4 | 15 | | | | 6 | −2 | 50 | 100 | 2.5 | 100 | F-84A |
| 2SC 75 | IF | Ge.G | 15 | | 5 | 30 | 75 | 8 | 15 | | | | 6 | −1 | -0.96* | 10 | 2.1 | | F-18 |
| 2SC 76 | " | " | 15 | | 5 | 30 | 75 | 8 | 15 | | | | 6 | −1 | -0.96* | 10 | 2.1 | | F-18 |
| 2SC 77 | " | " | 15 | | 5 | 30 | 75 | 8 | 15 | | | | 6 | −1 | -0.96* | 10 | 2.1 | | F-18 |
| 2SC 78 | RF.Conv.Mix Osc | " | 15 | | 5 | 30 | 75 | 2 | 15 | | | | 6 | −1 | -0.98* | 20 | 1.5 | | F-18 |
| 2SC 79 | " | Si.Me | 15 | 3 | 50 | 300 | 175 | 1 | 10 | | | | 6 | −1 | 50 | 500* | 2.3 | 80* | F-49C |
| 2SC 80 | " | Si.EP | 30 | 3 | 80 | 200 | 175 | 0.1 | 20 | | | | 10 | −5 | 55 | 200* | 3.5 | 40 | F-50C |
| 2SC 81 | PA | Si.Me | 50 | | 5A | 125W (Tc = 25°C) | 150 | 10mA | 50 | 30 | 10 | 1A | 10 | −1A | 30 | 5 | 300 | 5 | F-108 |
| 2SC 82 | " | " | 100 | | 5A | 125W (Tc = 25°C) | 150 | 10mA | 100 | 30 | 10 | 1A | 10 | −1A | 30 | 5 | 300 | 5 | F-108 |
| 2SC 83 | " | " | 150 | | 5A | 125W (Tc = 25°C) | 150 | 10mA | 150 | 30 | 10 | 1A | 10 | −1A | 30 | 5 | 300 | 5 | F-108 |
| 2SC 84 | SW | Ge.A | 25 | 20 | 200 | 120 | 85 | 25 | 25 | 40 | 0.5 | 20 | | | | | | | F-12A |
| 2SC 85 | " | " | 25 | 20 | 400 | 120 | 85 | 25 | 25 | 30 | 0.3 | 200 | | | | | | | F-12A |
| 2SC 86 | " | " | 25 | 20 | 400 | 120 | 85 | 25 | 25 | 60 | 0.3 | 200 | | | | | | | F-12A |
| 2SC 87 | RF.Conv.Mix Osc.SW.PA | Si.Me | 30 | 3 | 100 | 600 | 175 | 1 | 10 | 50 | 1 | 10 | 10 | −10 | 50 | 250* | 4 | 90* | F-84C |
| 2SC 88 | " | " | 120 | 3 | 100 | 600 | 175 | 1 | 10 | 50 | 1 | 10 | 10 | −10 | 50 | 250* | 3 | 70* | F-84C |
| 2SC 92 | PA | Si.EP | 100 | 5 | 2A | 20W (Tc = 25°C) | 175 | 0.1 | 50 | 35 | 10 | 350 | 10 | −350 | | 190* | 35 | 25* | F-83 |
| 2SC 93 | " | " | 80 | 5 | 2A | 20W (Tc = 25°C) | 175 | 0.1 | 50 | 35 | 10 | 350 | 10 | −350 | | 190* | 35 | 25* | F-83 |
| 2SC 94 | " | " | 100 | 5 | 2A | 20W (Tc = 25°C) | 175 | 0.1 | 50 | 35 | 10 | 350 | 10 | −350 | | 190* | 35 | 25* | F-83 |
| 2SC 95 | RF.PA | Si.Me | 140 | | 100 | 800 | 150 | 1 | 30 | | | | 10 | −10 | | 140* | 10 | 80 | F-84A |
| 2SC 96 | " | Si.EP | 25 | 5 | 150 | 500 | 175 | 0.01 | 15 | 60 | | | 10 | −10 | | 150* | 17 | 50 | F-88A |
| 2SC 97 | RF.SW | " | 60 | 5 | 1A | 800 | 175 | 1 | 40 | 60 | 10 | 150 | 10 | −50 | 90 | 250* | 10 | 17* | F-84A |
| 2SC 98 | SW | Si.EP | 20 | 5 | 100 | 300 | 175 | 0.1 | 20 | 45 | 0.35 | 10 | 2 | −10 | | 350* | <5 | | F-49C |
| 2SC 99 | " | " | 20 | 5 | 100 | 300 | 175 | 0.1 | 20 | 80 | 0.35 | 10 | 2 | −10 | | 350* | <5 | | F-49C |
| 2SC 100 | RF.SW | " | 40 | 5 | 200 | 150 | 200 | 0.025 | 20 | 60 | 1 | 10 | 10 | −10 | 80 | 400* | 35 | 40* | F-23 |
| 2SC 101 | RF | Si.Me | 60 | 5.5 | 2A | 80W (Tc = 25°C) | 150 | 10mA | 20 | | | | 10 | −0.5A | 30 | | 350 | Ccrbb' 18nS | F-101 |
| 2SC 102 | " | " | 50 | | 7A | 100W (Tc = 25°C) | 150 | 45mA | 50 | | | | 10 | −0.5A | 25 | | 850 | Ccrbb' 10nS | F-109 |
| 2SC 103 | SW | Si.P | 25 | 5 | 50 | 250 | 175 | 1 | 15 | 35 | 1 | 10 | | | | | | | F-49C |
| 2SC 103A | " | " | 30 | 5 | 80 | 250 | 175 | 0.2 | 15 | 100 | 1 | 10 | | | | | | | F-49C |
| 2SC 104 | RF | " | 25 | | 50 | 250 | 175 | 1 | 15 | | | | 10 | −10 | 32 | 250* | 4 | 30 | F-49C |
| 2SC 104A | " | " | 30 | 5 | 80 | 250 | 175 | 0.2 | 15 | 60 | 1 | 10 | | | | | | | F-49C |
| 2SC 105 | " | " | 30 | 5 | 80 | 250 | 175 | 0.005 | 15 | 35 | 1 | 0.1 | 10 | −10 | 60 | 250* | 4 | 30 | F-49C |
| 2SC 106 | SW.PA | Si.E | 60 | 5 | 1.5A | 15W (Tc = 25°C) | 150 | 3mA | 30 | 20 | 5 | 0.5A | 12 | −200 | 30 | 100* | 50 | 7 | F-83 |
| 2SC 107 | " | " | 60 | 5 | 1A | 15W (Tc = 25°C) | 150 | 3mA | 30 | 20 | 5 | 0.5A | 12 | −200 | 30 | 100* | 50 | 7 | F-83 |
| 2SC 108 | RF.SW | Si.EMe | 90 | 5 | 600 | 600 | 150 | 1 | 30 | 35 | 2 | 150 | 10 | −10 | | 90* | 20 | 55 | F-84A |
| 2SC 109 | SW | " | 50 | 5 | 600 | 600 | 150 | 1 | 30 | 35 | 2 | 150 | | | | | | | F-84A |
| 2SC 110 | RF.PA | Si.Me | 40 | 5 | 200 | 750 | 175 | 1 | 20 | | | | 6 | −10 | 80 | 160* | 7 | 55 | F-84A |
| 2SC 111 | " | " | 50 | 5 | 200 | 750 | 175 | 1 | 20 | | | | 6 | −10 | 50 | 160* | 10 | 60 | F-84A |
| 2SC 112 | SW | " | 40 | 5 | 200 | 750 | 175 | 1 | 20 | 50 | 2 | 200 | | | | | | | F-84A |
| 2SC 113 | " | " | 50 | 5 | 200 | 750 | 175 | 1 | 20 | 50 | 2 | 200 | | | | | | | F-84A |
| 2SC 114 | " | " | 50 | 5 | 200 | 750 | 175 | 1 | 20 | 50 | | | | | | | | | F-84A |
| 2SC 115 | RF | Si.EMe | 30 | 5 | 50 | 750 | 175 | 3 | 30 | 50 | 5 | 3 | 20 | −10 | 50 | 200* | 3 | 100* | F-84A |
| 2SC 116 | RF.PA | " | 50 | 5 | 200 | 750 | 175 | 1 | 20 | 40 | 2 | 200 | 6 | −10 | 40 | 120* | 14 | 70 | F-84A |
| 2SC 117 | SW.PA | Si.TP | 75 | 5 | 600 | 13W (Tc = 25°C) | 175 | 5 | 40 | 40 | 15 | 30 | 15 | −30 | 45 | 112* | 15 | 20 | F-83 |
| 2SC 118 | PA | " | 80 | 5 | 600 | 13W (Tc = 25°C) | 175 | 5 | 40 | | | | 15 | −30 | 45 | 120* | 15 | 20 | F-83 |
| 2SC 119 | " | " | 75 | 5 | 600 | 13W (Tc = 25°C) | 175 | 5 | 40 | | | | 15 | −30 | 45 | 130* | 15 | 20 | F-83 |
| 2SC 120 | RF | Si.P | 40 | 1 | 25 | 250 | 150 | 0.1 | 10 | 40 | 10 | 0.05 | 10 | −1 | 90 | 200* | 4 | 40 | F-84A |
| 2SC 121 | RF.Conv.Mix Osc | " | 40 | 1 | 25 | 250 | 175 | 1 | 30 | | | | 10 | −1 | 40 | 130* | 4 | 30* | F-84A |
| 2SC 122 | " | " | 40 | 1 | 25 | 250 | 175 | 1 | 30 | | | | 10 | −1 | 90 | 160* | 4 | 40* | F-84A |
| 2SC 123 | " | " | 40 | 1 | 25 | 250 | 175 | 1 | 30 | | | | 10 | −1 | 140 | 180 | 4 | 40* | F-84A |
| 2SC 124 | " | " | 40 | 1 | 25 | 250 | 175 | 0.2 | 30 | 40 | 10 | 0.05 | 10 | −1 | 90 | 200* | 4 | 40* | F-84A |
| 2SC 125 | RF.SW | Si.EMe | 100 | 5 | 50 | 750 | 175 | 3 | 30 | 50 | 5 | 3 | 20 | −10 | 50 | 200* | 3 | Ccrbb 100pS | F-84C |

**Pin Configurations are 1. Emitter, 2. Base, 3. Collector, 4. Shield, unless otherwise specified. (Outline Dimensions: mm)**

| TYPE NO. | USES | MATERIAL STRUCTURE | $V_{CBO}$ (V) | $V_{EBO}$ (V) | $I_C$ (mA) | Pd (mW) | Tj (°C) | $I_{CBO}$ (uA) | VALUE OF DC/PULSE $V_{CB}$(V) | $h_{FE}$ | $V_{CE}$(V) | $I_C$(mA) | BIAS $V_{CB}$(V) | $I_e$(mA) | hfe hfb* | fab fT (Mc) | Cob (pF) | $r_{bb'}$ $h_{ie(real)}$* (Ω) | CASE STYLE |
|---|---|---|---|---|---|---|---|---|---|---|---|---|---|---|---|---|---|---|---|
| 2SC 126 | RF.SW | Si.EMe | 140 | 5 | 50 | 750 | 175 | 3 | 30 | 50 | 5 | 3 | 20 | −10 | 50 | 200* | 3 | $C_{c}r_{bb'}$ 100pS | F-84C |
| 2SC 127 | RF.Conv.Mix Osc | Si.P | 20 | | 25 | 200 | 175 | 2 | 15 | | | | 10 | −1 | 150 | 200* | 4 | 40* | F-84A |
| 2SC 128 | SW | Ge.A | 30 | 20 | 200 | 150 | 85 | 3 | 5 | 40 | 0.5 | 100 | 5 | −3 | | 7* | 9 | | F-84A |
| 2SC 129 | " | " | 25 | 20 | 200 | 150 | 85 | 3 | 5 | 60 | 0.5 | 100 | 5 | −3 | | 10* | 9 | | F-84A |
| 2SC 130 | RF.Conv.Mix Osc.PA | Si.EP | 60 | | 1A | 20W (Tc=25°C) | 175 | 0.1 | 10 | 40 | 10 | 20 | 10 | −20 | 40 | 160* | 15 | 35* | F-83 |
| 2SC 131 | SW | " | 40 | 5 | 300 | 350 | 175 | 0.05 | 10 | 60 | 1 | 10 | | | | | | | F-49C |
| 2SC 132 | " | " | 20 | 5 | 300 | 350 | 175 | 0.05 | 10 | 60 | 1 | 10 | | | | | | | F-49C |
| 2SC 133 | " | " | 20 | 5 | 300 | 350 | 175 | 0.05 | 10 | 60 | 1 | 10 | | | | | | | F-49C |
| 2SC 134 | " | " | 40 | 5 | 300 | 350 | 175 | 0.02 | 10 | 60 | 1 | 10 | | | | | | | F-49C |
| 2SC 135 | " | " | 20 | 5 | 300 | 350 | 175 | 0.02 | 10 | 60 | 1 | 10 | | | | | | | F-49C |
| 2SC 136 | " | " | 80 | 5 | 300 | 350 | 175 | 0.02 | 10 | 60 | 1 | 10 | | | | | | | F-49C |
| 2SC 137 | " | " | 25 | 5 | 300 | 350 | 175 | 0.05 | 10 | 50 | 1 | 10 | | | | | | | F-49C |
| 2SC 138 | RF.Conv.Mix Osc | " | 60 | 5 | 500 | 800 | 175 | 1 | 40 | | | | 10 | −30 | 50 | 400* | 4 | 40* | F-85A |
| 2SC 138A | " | " | 60 | 5 | 500 | 800 | 175 | | | | | | 10 | −30 | 50 | 400* | 4 | 40* | F-85A |
| 2SC 139 | " | " | 60 | 5 | 500 | 800 | 175 | 2 | 40 | | | | 10 | −30 | 50 | 400* | 4 | 40* | F-85A |
| 2SC 140 | RF | Si.EMe | 60 | | 1A | 1.7W | 175 | 12 | 30 | | | | 10 | −50 | -0.97* | 150* | 13 | 20* | F-74 |
| 2SC 141 | " | Si.EP | 20 | 5 | 200 | 360 | 175 | 0.1 | 15 | 75 | 1 | 10 | 10 | −10 | 95 | 450* | 4 | 70* | F-49C |
| 2SC 142 | RF.SW | " | 30 | 5 | 200 | 360 | 175 | 0.1 | 15 | 75 | 1 | 10 | 10 | −10 | 95 | 450* | 4 | 70* | F-49C |
| 2SC 143 | " | " | 40 | 5 | 200 | 360 | 175 | 0.1 | 15 | 75 | 1 | 10 | 10 | −10 | 95 | 450* | 4 | 70* | F-49C |
| 2SC 144 | " | " | 50 | 5 | 200 | 360 | 175 | 0.1 | 15 | 65 | 1 | 10 | 10 | −10 | 85 | 450* | 3 | 70* | F-49C |
| 2SC 144A | " | " | 60 | 5 | 200 | 360 | 175 | 0.1 | 15 | 65 | 1 | 10 | 10 | −10 | 85 | 450* | 3 | 70* | F-49C |
| 2SC 145 | RF | " | 30 | 5 | 200 | 360 | 175 | 0.1 | 15 | | | | 10 | −10 | 70 | 500* | 3 | 70* | F-49C |
| 2SC 146 | " | " | 50 | 5 | 200 | 360 | 175 | 0.1 | 15 | | | | 10 | −10 | 80 | 500* | 3 | 70* | F-49C |
| 2SC 146A | " | " | 60 | 5 | 200 | 360 | 175 | 0.1 | 15 | | | | 10 | −10 | 80 | 500* | 3 | 70* | F-49C |
| 2SC 147 | " | Si.EMe | 30 | 5 | 1A | 750 | 175 | 5 | 30 | 50 | 4 | 100 | 10 | −50 | -0.96* | 120* | 12 | 20* | F-74 |
| 2SC 149 | RF.IF.Conv Osc | Si.DB | 120 | 6 | 300 | 800 | 175 | 10 | 60 | 45 | 10 | 150 | 10 | −50 | 45 | 160* | 14 | 45* | F-84A |
| 2SC 150 | RF | Si.Me | 20 | 1 | 100 | 750 | 175 | 10 | 20 | | | | 6 | −10 | | 80 | 7 | 70 | F-84A |
| 2SC 151 | " | " | 40 | 4 | 100 | 750 | 175 | 10 | 40 | | | | 6 | −10 | | 100* | 7 | 70 | F-84A |
| 2SC 152 | " | " | 60 | 4 | 100 | 750 | 175 | 10 | 60 | | | | 6 | −10 | | 120* | 7 | 70 | F-84A |
| 2SC 153 | " | " | 120 | 4 | 100 | 750 | 175 | 10 | 120 | 65 | 5 | 50 | 5 | −10 | 40 | 140* | 6 | 80 | F-84A |
| 2SC 154 | RF | Si.EMe | 120 | 5 | 100 | 750 | 175 | 10 | 120 | | | | 10 | −10 | 60 | 150* | 2.5 | 20 | F-84A |
| 2SC 154A | " | " | 150 | 5 | 100 | 750 | 175 | 10 | 150 | | | | 10 | −10 | 60 | 150* | 2.5 | 20 | F-84A |
| 2SC 155 | RF.Conv. | Si.P | 20 | 2 | 25 | 100 | 125 | 2 | 12 | | | | 6 | −2 | 35 | 200* | 2 | 60* | F-35 |
| 2SC 156 | " | " | 20 | 2 | 25 | 100 | 125 | 2 | 12 | | | | 6 | −2 | 50 | 200* | 2 | 80 | F-35 |
| 2SC 157 | RF | Si.D | 20 | 1 | 20 | 125 | 150 | 1 | 12 | | | | 6 | −2 | 30 | 25 | 3.5 | 80 | F-84A |
| 2SC 158 | " | " | 20 | 1 | 20 | 125 | 150 | 1 | 12 | | | | 6 | −2 | 40 | 40 | 3.5 | 80 | F-84A |
| 2SC 159 | RF.Conv.Mix Osc | " | 20 | 1 | 20 | 125 | 150 | 1 | 12 | | | | 6 | −2 | 50 | 60 | 3.5 | 80 | F-84A |
| 2SC 160 | " | " | 20 | 1 | 20 | 125 | 150 | 1 | 12 | | | | 6 | −2 | 60 | 100 | 3.5 | 80 | F-84A |
| 2SC 161 | SW.PA | Si.Me | 60 | 5.5 | 4A | 50W (Tc=25°C) | 150 | 2mA | 30 | 25 | 5 | 3A | 10 | −200 | | 30* | 350 | 50 | F-102 |
| 2SC 162 | RF | Si.EP | 30 | 5 | 250 | 500 | 175 | 0.1 | 15 | 60 | 1 | 50 | 10 | −20 | 90 | 500* | 3.5 | 90* | F-84A |
| 2SC 163 | " | " | 50 | 5 | 250 | 500 | 175 | 0.1 | 15 | 60 | 1 | 50 | 10 | −20 | 90 | 500* | 3.3 | 90* | F-84A |
| 2SC 164 | " | " | 60 | 5 | 250 | 500 | 175 | 0.1 | 15 | 60 | 1 | 50 | 10 | −20 | 90 | 500* | 3.2 | 90* | F-84A |
| 2SC 165 | " | " | 60 | 5 | 250 | 500 | 175 | 0.1 | 15 | 60 | 1 | 50 | 10 | −20 | 90 | 500* | 3.3 | 90* | F-84A |
| 2SC 166 | RF.SW | Si.GD | 30 | 5 | 30 | 200 | 175 | 0.1 | 20 | 80 | 12 | 3 | 12 | −3 | | 16 | 13 | 90* | F-49C |
| 2SC 167 | " | " | 55 | 5 | 30 | 200 | 175 | 0.1 | 20 | 80 | 12 | 3 | 12 | −3 | | 16 | 13 | 90* | F-49C |
| 2SC 170 | RF.PA | Si.P | 25 | 3 | 50 | 110 | 175 | 0.5 | 20 | 40 | 1 | 10 | 6 | −10 | 60 | | 250* | 5 | 50 F-49C |
| 2SC 171 | " | " | 25 | 3 | 50 | 200 | 175 | 0.5 | 20 | 30 | 6 | 0.1 | 6 | −10 | 60 | | 250* | 5 | 50 F-49C |
| 2SC 172 | " | " | 25 | 5 | 50 | 300 | 175 | 0.1 | 20 | 30 | 6 | 0.1 | 6 | −10 | 60 | | 350* | 5 | 50 F-49C |
| 2SC 172A | " | " | 40 | 5 | 50 | 360 | 200 | 0.025 | 20 | | | | 6 | −10 | 60 | 350* | 5 | 50 | F-49C |
| 2SC 173 | RF.Conv.Mix Osc | Ge.G | 15 | | 5 | 30 | 75 | 8 | 15 | | | | 6 | −1 | -0.976* | 20 | 2 | | F-7 |
| 2SC 174 | " | Si.P | 30 | 5 | 25 | 200 | 175 | 1 | 12 | | | | 6 | −2 | 45 | 170* | 1.5 | 65* | F-50C |
| 2SC 174A | " | " | 60 | 5 | 25 | 200 | 175 | 1 | 30 | | | | 6 | −2 | 45 | 200* | 1.5 | 65* | F-50C |
| 2SC 175 | IF | Ge.G | 15 | | 5 | 30 | 75 | 8 | 15 | | | | 6 | −1 | -0.96* | 10 | 2.1 | | F-7 |
| 2SC 176 | " | " | 15 | | 5 | 30 | 75 | 8 | 15 | | | | 6 | −1 | -0.96* | 10 | 2.1 | | F-7 |
| 2SC 177 | " | " | 15 | | 5 | 30 | 75 | 8 | 15 | | | | 6 | −1 | −0.96* | 10 | 2.1 | | F-7 |
| 2SC 178 | RF.Conv.Mix Osc | " | 15 | | 5 | 30 | 75 | 2 | 15 | | | | 6 | −1 | −0.98* | 20 | 1.5 | | F-7 |
| 2SC 179 | SW | Ge.A | 25 | 20 | 400 | 120 | 85 | 8 | 12 | 40 | 0.2 | 20 | 6 | −1 | | 3 | 25 | 300 | F-12A |
| 2SC 180 | " | " | 25 | 20 | 400 | 120 | 85 | 8 | 12 | 35 | 0.3 | 200 | 6 | −1 | | 5 | 25 | 250 | F-12A |
| 2SC 181 | " | " | 25 | 20 | 400 | 120 | 85 | 8 | 12 | 60 | 0.3 | 200 | 6 | −1 | | 10 | 25 | 250 | F-12A |
| 2SC 182 | RF.AF.PA | Si.EP | 25 | 5 | 150 | 150 | 150 | 1 | 20 | 80 | 1 | 20 | 6 | −1 | 55 | 90* | 6.5 | 25 | F-23 |

**Pin Configurations are 1. Emitter, 2. Base, 3. Collector, 4. Shield, unless otherwise specified. (Outline Dimensions: mm)**

| TYPE NO. | USES | MATERIAL STRUCTURE | $V_{CBO}$ (V) | $V_{EBO}$ (V) | Ic (mA) | Pd (mW) | Tj (°C) | $I_{CBO}$ (uA) | $V_{CB}$(V) | VALUE OF DC/PULSE hFE | $V_{CE}$(V) | $I_C$(mA) | BIAS $V_{CB}$(V) | $I_e$(mA) | hfe hfb* | fab fT (Mc) | Cob (pF) | $r_{bb'}$ $h_{ie(real)}$* (Ω) | CASE STYLE |
|---|---|---|---|---|---|---|---|---|---|---|---|---|---|---|---|---|---|---|---|
| 2SC 183 | RF.Conv.Mix Osc.AF | Si.EP | 20 | 5 | 30 | 100 | 125 | 0.1 | 15 | 75 | 3 | 0.5 | 6 | −1 | 80 | 150* | 1.6 | 50* | F-23 |
| 2SC 184 | RF.Conv.Mix Osc | " | 20 | 5 | 30 | 100 | 125 | 0.1 | 15 | | | | 6 | −1 | 80 | 200* | 1.6 | 50* | F-23 |
| 2SC 185 | " | " | 20 | 5 | 30 | 100 | 125 | 0.1 | 15 | | | | 6 | −1 | 80 | 250* | 1.6 | 50* | F-23 |
| 2SC 186 | " | Si.P | 20 | 2 | 25 | 85 | 120 | 2 | 12 | | | | 6 | −2.5 | 40 | 200* | 4 | 35 | F-12A |
| 2SC 187 | RF.Conv.Mix Osc | " | 20 | 2 | 25 | 85 | 120 | 2 | 12 | | | | 6 | −2.5 | 50 | 200* | 4 | 50 | F-12A |
| 2SC 188 | RF.PA | " | 40 | 3 | 500 | 600 | 175 | 1 | 30 | 40 | 10 | 150 | 6 | −10 | 50 | 150* | 9 | 35 | F-84B |
| 2SC 189 | RF.SW.PA | " | 60 | 5 | 500 | 600 | 175 | 1 | 30 | 40 | 10 | 150 | 6 | −10 | 50 | 150* | 9 | 35 | F-84B |
| 2SC 190 | " | " | 60 | 5 | 500 | 600 | 175 | 1 | 30 | 75 | 10 | 150 | 6 | −10 | 80 | 180* | 9 | 35 | F-84B |
| 2SC 191 | RF | Si.GD | 60 | 1 | 10 | 250 | 150 | 2 | 60 | | | | 20 | −1 | -0.955* | 50 | 3 | 200 | F-84A |
| 2SC 192 | " | " | 60 | 1 | 10 | 250 | 150 | 2 | 60 | | | | 20 | −1 | -0.955* | 10 | 3 | 200 | F-84A |
| 2SC 193 | " | " | 60 | 1 | 10 | 250 | 150 | 2 | 60 | | | | 20 | −1 | -0.955* | 30 | 3 | 200 | F-84A |
| 2SC 194 | " | " | 60 | 1 | 10 | 250 | 150 | 2 | 60 | | | | 20 | −1 | -0.955* | 50 | 3 | 200 | F-84A |
| 2SC 195 | " | " | 30 | 1 | 10 | 250 | 150 | 1 | 30 | | | | 20 | −1 | -0.955* | 10 | 3 | 200 | F-84A |
| 2SC 196 | " | " | 30 | 1 | 10 | 250 | 150 | 1 | 30 | | | | 20 | −1 | -0.955* | 30 | 3 | 200 | F-84A |
| 2SC 197 | " | " | 30 | 1 | 10 | 250 | 150 | 1 | 30 | | | | 20 | −1 | -0.955* | 50 | 3 | 200 | F-84A |
| 2SC 198 | RF.PA | Si.EP | 50 | 5 | 500 | 800 | 175 | 1 | 10 | | | | 10 | −20 | 40 | 350* | 6 | 50* | F-85B |
| 2SC 199 | SW | Si.Me | 80 | 15 | 50 | 600 | 175 | 0.1 | 15 | 70 | 12 | 3 | 12 | −3 | 70 | | 2 | 100 | F-84B |
| 2SC 200 | RF.Conv.Mix Osc.PA | Si.EP | 40 | | 300 | 650 | 175 | 0.02 | 10 | | | | 6 | −1 | 60 | 350* | 4 | 50* | F-84C |
| 2SC 201 | " | " | 20 | | 300 | 650 | 175 | 0.1 | 10 | | | | 6 | −1 | 60 | 350* | 4 | 50* | F-84C |
| 2SC 202 | " | " | 80 | | 300 | 650 | 175 | 0.02 | 10 | | | | 6 | −1 | 60 | 350* | 4 | 50* | F-84C |
| 2SC 203 | " | " | 40 | | 200 | 350 | 175 | 0.02 | 10 | | | | 6 | −1 | 60 | 350* | 4 | 50* | F-49C |
| 2SC 204 | RF.SW | " | 30 | 5 | 200 | 350 | 175 | 0.05 | 10 | 60 | 1 | 10 | 6 | −2 | 70 | 250* | 4 | 80* | F-49C |
| 2SC 205 | RF.Conv.Mix Osc.PA | " | 80 | | 200 | 350 | 175 | 0.02 | 10 | | | | 6 | −1 | 60 | 350* | 4 | 50* | F-49C |
| 2SC 206 | " | Si.P | 20 | 2 | 25 | 200 | 175 | 2 | 12 | | | | 6 | −2 | 35 | 200* | 2 | 80* | F-50C |
| 2SC 207 | " | " | 20 | 3 | 25 | 200 | 175 | 0.1 | 12 | | | | 6 | −2 | 80 | 800* | 1.0 | 80* | F-50C |
| 2SC 208 | " | " | 20 | 3 | 25 | 200 | 175 | 1 | 12 | | | | 6 | −2 | 60 | 550* | 1.2 | 80* | F-50C |
| 2SC 209 | " | " | 20 | 3 | 25 | 200 | 175 | 1 | 12 | | | | 6 | −2 | 40 | 450* | 1.2 | 80* | F-50C |
| 2SC 210 | RF.Conv.Mix Osc | " | 50 | | 500 | 650 | 175 | 0.1 | 10 | | | | 10 | −20 | 50 | 150* | 15 | 35* | F-84B |
| 2SC 211 | RF | " | 25 | | 500 | 650 | 175 | 1 | 10 | | | | 10 | −20 | 50 | 150* | 15 | 35* | F-84B |
| 2SC 212 | " | " | 80 | | 500 | 650 | 175 | 0.1 | 10 | | | | 10 | −20 | 50 | 150* | 15 | 35* | F-84B |
| 2SC 213 | RF.PA | Si.P | 50 | | 600 | 1.5W | 175 | 0.1 | 10 | | | | 10 | −20 | 50 | 150* | 15 | 35* | F-83 |
| 2SC 214 | " | " | 25 | | 600 | 1.5W | 175 | 1 | 10 | | | | 10 | −20 | 50 | 150* | 15 | 35* | F-83 |
| 2SC 215 | " | " | 80 | | 600 | 1.5W | 175 | 0.1 | 10 | | | | 10 | −20 | 50 | 150* | 15 | 35* | F-83 |
| 2SC 216 | SW | " | 50 | 5 | 300 | 650 | 175 | 0.1 | 10 | 50 | 1 | 50 | | | | | | | F-84B |
| 2SC 217 | " | " | 25 | 5 | 300 | 650 | 175 | 1 | 10 | 50 | 1 | 50 | | | | | | | F-84B |
| 2SC 218 | " | " | 80 | 5 | 300 | 650 | 175 | 0.1 | 10 | 50 | 1 | 50 | | | | | | | F-84B |
| 2SC 220 | RF | Si.EP | 50 | | 700 | 650 | 175 | 0.1 | 10 | | | | 10 | −20 | 50 | 150* | 15 | 25* | F-84B |
| 2SC 221 | " | " | 25 | | 700 | 650 | 175 | 1 | 10 | | | | 10 | −20 | 50 | 150* | 15 | 25* | F-84B |
| 2SC 222 | " | " | 80 | | 700 | 650 | 175 | 0.1 | 10 | | | | 10 | −20 | 50 | 150* | 15 | 25* | F-84B |
| 2SC 223 | RF.PA | " | 50 | | 1A | 1.5W | 175 | 0.1 | 10 | | | | 10 | −20 | 20 | 150* | 15 | 25* | F-83 |
| 2SC 224 | " | " | 25 | | 1A | 1.5W | 175 | 1 | 10 | | | | 10 | −20 | 20 | 150* | 15 | 25* | F-83 |
| 2SC 225 | " | " | 80 | | 1A | 1.5W | 175 | 0.1 | 10 | | | | 10 | −20 | 20 | 150* | 15 | 25* | F-83 |
| 2SC 226 | SW | " | 50 | 5 | 700 | 650 | 175 | 0.1 | 10 | 50 | 1 | 100 | | | | | | | F-84B |
| 2SC 227 | " | " | 25 | 5 | 700 | 650 | 175 | 1 | 10 | 50 | 1 | 100 | | | | | | | F-84B |
| 2SC 228 | " | " | 80 | 5 | 700 | 650 | 175 | 0.1 | 10 | 50 | 1 | 100 | | | | | | | F-84B |
| 2SC 229 | " | " | 80 | 5 | 1A | 1.5W | 175 | 0.1 | 10 | 50 | 1 | 100 | | | | | | | F-83 |
| 2SC 230 | RF.Conv.Mix Osc.PA | " | 80 | 3 | 200 | 350 | 175 | 0.02 | 10 | | | | 6 | −1 | 60 | 350* | 4 | 50* | F-49C |
| 2SC 231 | SW | Si.EP | 50 | 5 | 700 | 650 | 175 | 1 | 10 | 40 | 1 | 150 | | | | | | | F-84B |
| 2SC 232 | " | " | 25 | 5 | 700 | 650 | 175 | 1 | 10 | 40 | 1 | 150 | | | | | | | F-84B |
| 2SC 233 | " | " | 80 | 5 | 700 | 650 | 175 | 1 | 10 | 40 | 1 | 150 | | | | | | | F-84B |
| 2SC 234 | RF.PA | " | 100 | | 1.5A | 1.8W | 175 | 1mA | 30 | | | | 10 | −150 | 20 | 140* | 35 | 25* | F-83 |
| 2SC 235 | " | " | 100 | | 1.5A | 1.5W | 175 | 1mA | 30 | | | | 10 | −150 | 20 | 120* | 35 | 25* | F-83 |
| 2SC 236 | " | " | 90 | | 500 | 1.8W | 175 | 0.1 | 10 | | | | 10 | −20 | 17 | 100* | 15 | 25* | F-83 |
| 2SC 237 | RF | Si.EP | 30 | | 300 | 350 | 175 | 0.05 | 10 | | | | 6 | −1 | 80 | 450* | 5 | 50* | F-49C |
| 2SC 238 | RF.AF | " | 40 | 5 | 100 | 650 | 175 | 0.1 | 10 | | | | 6 | −1 | 80 | 350* | 4 | 50* | F-84C |
| 2SC 239 | SW | " | 50 | 5 | 300 | 350 | 175 | 0.05 | 10 | 60 | 1 | 10 | | | | | | | F-49C |
| 2SC 240 | SW | Si.EMe | 100 | 5 | 5A | 75W (Tc = 25°C) | 175 | 5mA | 100 | 35 | 10 | 1A | 2 | −1A | | 35 | | | F-102 |
| 2SC 241 | " | " | 60 | 5 | 5A | 75W (Tc = 25°C) | 175 | 10mA | 60 | 35 | 10 | 1A | 10 | −1A | | 35 | | | F-102 |
| 2SC 242 | " | " | 100 | 5 | 5A | 75W (Tc = 25°C) | 175 | 10mA | 100 | 35 | 10 | 1A | 10 | −1A | | 35 | | | F-102 |
| 2SC 243 | " | " | 140 | 5 | 5A | 75W (Tc = 25°C) | 175 | 10mA | 140 | 35 | 10 | 1A | 10 | −1A | | 35 | | | F-102 |

**Pin Configurations are 1. Emitter, 2. Base, 3. Collector, 4. Shield, unless otherwise specified.** (Outline Dimensions: mm)

| TYPE NO. | USES | MATERIAL STRUCTURE | $V_{CBO}$ (V) | $V_{EBO}$ (V) | Ic (mA) | Pd (mW) | Tj (°C) | $I_{CBO}$ (uA) | VALUE OF DC/PULSE | | | | BIAS | | hfe hfb* | fab fT (Mc) | Cob (pF) | $r_{bb'}$ $h_{ie(real)}$* (Ω) | CASE STYLE |
|---|---|---|---|---|---|---|---|---|---|---|---|---|---|---|---|---|---|---|---|
| | | | | | | | | | $V_{CB}$(V) | hFE | $V_{CE}$(V) | Ic(mA) | $V_{CB}$(V) | Ie(mA) | | | | | |
| 2SC 244 | SW | Si.EMe | 60 | 5 | 5A | 75W (Tc = 25°C) | 175 | 50mA | 60 | 35 | 10 | 1A | 10 | —1A | | 35 | | | F-102 |
| 2SC 245 | " | " | 120 | 5 | 5A | 75W (Tc = 25°C) | 175 | 20mA | 120 | 35 | 10 | 1A | 10 | —1A | | 35 | | | F-102 |
| 2SC 246 | " | " | 180 | 5 | 5A | 75W (Tc = 25°C) | 175 | 20mA | 180 | 35 | 10 | 1A | 10 | —1A | | 35 | | | F-102 |
| 2SC 247 | RF.PA | Si.P | 100 | 3 | 100 | 600 | 175 | 1 | 30 | | | | 6 | —2 | 60 | 150* | 3 | 70* | F-84B |
| 2SC 248 | " | " | 70 | 5 | 50 | 300 | 175 | 1 | 30 | | | | 6 | —2.5 | 60 | 170* | 2.5 | 50 | F-49C |
| 2SC 249 | " | " | 70 | 5 | 70 | 500 | 175 | 1 | 30 | | | | 6 | —2.5 | 60 | 170* | 2.7 | 50 | F-84B |
| 2SC 250 | RF.Conv.Mix Osc | " | 20 | 2 | 25 | 60 | 150 | 2 | 12 | | | | 6 | —2 | 45 | 170* | 2 | 65 | F-13A |
| 2SC 251 | " | Si.EP | 30 | 3 | 30 | 200 | 150 | 1 | 15 | | | | 6 | —5 | 50 | 900* | 1 | 70* | F-50C |
| 2SC 251A | " | " | 30 | 3 | 30 | 200 | 150 | 1 | 15 | | | | 6 | —5 | 50 | 900* | 1 | 70* | F-50C |
| 2SC 252 | " | " | 30 | 3 | 30 | 200 | 150 | 1 | 15 | | | | 6 | —5 | 50 | 900* | 1 | 70* | F-50C |
| 2SC 253 | " | " | 30 | 3 | 30 | 200 | 150 | 1 | 15 | | | | 6 | —5 | 50 | 900* | 1 | 70* | F-50C |
| 2SC 254 | RF.PA | " | 50 | 5 | 800 | 650 | 175 | 2 | 40 | 50 | 1 | 150 | 10 | —50 | 55 | 250* | 13 | 20* | F-84A |
| 2SC 255 | " | " | 80 | 5 | 800 | 650 | 175 | 1 | 40 | 45 | 1 | 150 | 10 | —50 | 50 | 250* | 13 | 20* | F-84A |
| 2SC 256 | " | " | 90 | 5 | 800 | 650 | 175 | 1 | 40 | 45 | 1 | 150 | 10 | —50 | 50 | 250* | 13 | 20* | F-84A |
| 2SC 257 | " | " | 50 | 5 | 800 | 800 | 175 | 2 | 40 | 50 | 1 | 150 | 10 | —50 | 55 | 250* | 13 | 20* | F-91 |
| 2SC 258 | " | " | 80 | 5 | 800 | 800 | 175 | 1 | 40 | 45 | 1 | 150 | 10 | —50 | 50 | 250* | 13 | 20* | F-91 |
| 2SC 259 | " | " | 90 | 5 | 800 | 800 | 175 | 1 | 40 | 45 | 1 | 150 | 10 | —50 | 50 | 250* | 13 | 20* | F-91 |
| 2SC 260 | PA | " | 30 | 5 | 1A | 1.6W | 175 | 2 | 20 | 60 | 10 | 150 | 10 | —50 | 65 | 280* | 15 | 23* | F-83 |
| 2SC 261 | " | " | 60 | 5 | 1A | 1.6W | 175 | 1 | 20 | 60 | 10 | 150 | 10 | —50 | 65 | 280* | 14 | 23* | F-83 |
| 2SC 262 | " | " | 80 | 5 | 1A | 1.6W | 175 | 1 | 20 | 60 | 10 | 150 | 10 | —50 | 65 | 280* | 13 | 23* | F-83 |
| 2SC 263 | RF | " | 15 | | 120 | 100 | 100 | 0.4 | 9 | | | | 5 | —1 | 60 | 200* | 3 | 70* | F-21 |
| 2SC 264 | RF.SW | " | 30 | 5 | 120 | 100 | 100 | 0.1 | 9 | 75 | 1 | 10 | 5 | —5 | 85 | 400* | 3 | 70* | F-21 |
| 2SC 265 | ' | " | 40 | 5 | 120 | 100 | 100 | 0.1 | 9 | 75 | 1 | 10 | 5 | —5 | 85 | 400* | 3 | 70* | F-21 |
| 2SC 266 | RF.AF | " | 30 | 5 | 30 | 100 | 150 | 0.1 | 25 | 75 | 3 | 0.5 | 6 | —1 | 80 | 250* | 1.6 | 45 | F-23 |
| 2SC 267 | RF.PA | " | 35 | 5 | 200 | 150 | 150 | 1 | 35 | 70 | 1 | 20 | 6 | —1 | 45 | 90* | 6.5 | 25 | F-23 |
| 2SC 268 | RF.PA.SW | " | 60 | 5 | 30 | 150 | 150 | 5 | 50 | 40 | 1 | 1 | 6 | —1 | 55 | 150* | 1.6 | 50 | F-23 |
| 2SC 269 | SW | " | 25 | 5 | 200 | 150 | 150 | 1 | 15 | 85 | 0.5 | 1 | | | | | | | F-139 |
| 2SC 270 | PA | Si.Me | 270 | 6 | 5A | 50W (Tc = 25°C) | 150 | 1mA | 50 | 40 | 3 | 2A | 10 | —500 | 56 | 22* | 250 | 5 | F-103 |
| 2SC 271 | RF.Conv.Mix Osc | Si.EP | 25 | 3 | 20 | 100 | 150 | 1 | 12 | | | | 6 | —2 | 70 | 1100* | 0.7 | Ccrbb' 10pS | F-23 |
| 2SC 272 | " | " | 25 | 3 | 20 | 100 | 150 | 1 | 12 | | | | 6 | —2 | 70 | 1200* | 0.7 | Ccrbb' 3pS | F-23 |
| 2SC 273 | RF.Conv.Mix Osc | Si.P | 120 | 5 | 50 | 500 | 150 | 1 | 60 | | | | 30 | —3 | 50 | 150* | 2.5 | 25 | F-84A |
| 2SC 274 | | | | | | | | | | | | | | | | | | | |
| 2SC 275 | | | | | | | | | | | | | | | | | | | |
| 2SC 276 | | | | | | | | | | | | | | | | | | | |
| 2SC 277 | | | | | | | | | | | | | | | | | | | |
| 2SC 278 | | | | | | | | | | | | | | | | | | | |
| 2SC 279 | | | | | | | | | | | | | | | | | | | |
| 2SC 280 | Diff | Si.E | 30 | 5 | 10 | 80 | 125 | 0.01 | 20 | 80 | 6 | 0.1 | | | | | | | F-15 |
| 2SC 281 | RF | Si.EPa | 30 | 5 | 100 | 200 | 175 | 0.1 | 20 | 170 | 6 | 10 | 6 | —0.1 | 50 | 80* | 7 | 70 | F-12C |
| 2SC 282 | SW | " | 30 | 5 | 100 | 350 | 175 | 1 | 20 | 100 | 6 | 10 | 6 | —10 | | 180* | 7 | 60 | F-12A |
| 2SC 283 | PA | " | 50 | 5 | 100 | 350 | 175 | 0.1 | 20 | 65 | 6 | 10 | 6 | —10 | 100 | 180* | 7 | 60 | F-12A |
| 2SC 284 | SW | " | 70 | 5 | 100 | 350 | 175 | 1 | 20 | 60 | 6 | 10 | 6 | —10 | | 160* | 7 | 60 | F-12A |
| 2SC 285 | PA | Si.EP | 50 | | 200 | 500 | 150 | 0.1 | 10 | | | | 10 | —10 | 60 | 320* | 3.5 | 80* | F-84B |
| 2SC 285A | RF.PA | " | 50 | | 300 | 500 | 150 | 0.1 | 10 | | | | 10 | —10 | 60 | 500* | 3.5 | 60* | F-84B |
| 2SC 286 | RF.Conv.Mix Osc. | " | 20 | | 10 | 100 | 150 | 1 | 12 | | | | 6 | —2 | 70 | 900* | 0.7 | Ccrbb 15pS | F-23 |
| 2SC 287 | " | " | 20 | 2 | 10 | 100 | 150 | 1 | 12 | | | | 6 | —2 | 70 | 900* | 0.7 | Ccrbb 12pS | F-23 |
| 2SC 288 | " | " | 30 | 2 | 20 | 100 | 150 | 1 | 12 | | | | 6 | —2 | 70 | 1100* | 0.7 | Ccrbb 10pS | F-23 |
| 2SC 289 | " | " | 25 | 2 | 20 | 100 | 150 | 1 | 12 | | | | 6 | —2 | 70 | 1100* | 0.7 | Ccrbb 4pS | F-23 |
| 2SC 290 | PA | Si.EP | 70 | 5 | 2A | 20W (Tc = 25°C) | 175 | 3mA | 30 | 35 | 10 | 350 | 10 | —350 | | 160* | 35 | 25* | F-83 |
| 2SC 291 | " | Si.E | 70 | 5 | 3A | 1W | 175 | 3 | 30 | 70 | 2 | 100 | 10 | —50 | 70 | 90* | 18 | Ccrbb 50pS | F-84C |
| 2SC 292 | " | " | 100 | 5 | 3A | 1W | 175 | 3 | 30 | 70 | 2 | 100 | 10 | —50 | 70 | 90* | 18 | Ccrbb 50pS | F-84C |
| 2SC 293 | " | " | 130 | 5 | 3A | 1W | 175 | 3 | 30 | 70 | 2 | 100 | 10 | —50 | 70 | 90* | | | F-84C |
| 2SC 294 | Diff | Si.EP | 25 | 5 | 50 | 300 | 175 | 0.1 | 10 | 80 | 1 | 1 | 6 | —2 | | 200* | 4.5 | 40 | F-87B |
| 2SC 295 | Ch | " | 15 | 5 | 50 | 300 | 175 | 1 | 10 | 50 | 1 | 0.2 | 6 | —2 | | 200* | 4.5 | 40 | F-86B |
| 2SC 296 | RF.Conv.Mix Osc | Si.P | 20 | 3 | 25 | 200 | 175 | 1 | 12 | | | | 6 | —2 | 80 | 180* | 2.5 | 100* | F-50C |
| 2SC 297 | PA | Si.E | 70 | 5 | 3A | 10W (Tc = 25°C) | 175 | 3 | 30 | 70 | 2 | 100 | 10 | —50 | 70 | 90* | 18 | Ccrbb 50pS | F-97C |
| 2SC 298 | " | " | 100 | 5 | 3A | 10W (Tc = 25°C) | 175 | 3 | 30 | 70 | 2 | 100 | 10 | —50 | 70 | 90* | 19 | Ccrbb 50pS | F-97C |
| 2SC 299 | " | " | 130 | 5 | 3A | 10W (Tc = 25°C) | 175 | 3 | 30 | 70 | 2 | 100 | 10 | —50 | 70 | 90* | 18 | Ccrbb 50pS | F-97C |
| 2SC 300 | RF | Si.EP | 25 | 5 | 100 | 260 | 150 | 0.5 | 15 | 85 | 10 | 0.1 | 15 | —10 | | 400* | 3.5 | Ccrbb 250pS | F-49A |
| 2SC 301 | " | " | 25 | 5 | 100 | 260 | 150 | 0.01 | 15 | 85 | 10 | 0.1 | 15 | —10 | | 400* | 3.5 | Ccrbb 250pS | F-49A |

**Pin Configurations are 1. Emitter, 2. Base, 3. Collector, 4. Shield, unless otherwise specified. (Outline Dimensions: mm)**

| TYPE NO. | USES | MATERIAL STRUCTURE | $V_{CBO}$ (V) | $V_{EBO}$ (V) | $I_C$ (mA) | Pd (mW) | Tj (°C) | $I_{CBO}$ (uA) | VALUE OF DC/PULSE BIAS $V_{CB}$(V) | $h_{FE}$ | $V_{CE}$(V) | $I_C$(mA) | BIAS $V_{CB}$(V) | $I_e$(mA) | hfe hfb* | fab fT (Mc) | Cob (pF) | $r_{bb'}$ $h_{ie}$(real)* (Ω) | CASE STYLE |
|---|---|---|---|---|---|---|---|---|---|---|---|---|---|---|---|---|---|---|---|
| 2SC 302 | RF.Conv. Mix.Osc | Si.EP | 50 | 5 | 100 | 360 | 200 | 0.01 | 15 | 50 | 10 | 0.1 | 15 | −10 | | 420* | 3.5 | 65* | F-49C |
| 2SC 303 | RF.PA | " | 50 | 3 | 500 | 800 | 200 | 50 | 28 | 20 | 28 | 100 | 20 | −50 | | 200* | 10 | | F-84B |
| 2SC 304 | " | " | 60 | 4 | 500 | 800 | 200 | 10 | 28 | 25 | 28 | 100 | 20 | −50 | | 220* | 10 | | F-84B |
| 2SC 305 | " | " | 80 | 5 | 500 | 800 | 200 | 0.5 | 28 | 30 | 28 | 100 | 20 | −50 | | 220* | 10 | | F-84B |
| 2SC 306 | RF.SW | " | 50 | 5 | 500 | 800 | 200 | 0.1 | 30 | 85 | 10 | 150 | 10 | −30 | | 240* | 10 | 30* | F-84B |
| 2SC 307 | " | " | 80 | 5 | 500 | 800 | 200 | 10nA | 30 | 85 | 10 | 150 | 10 | −30 | | 240* | 10 | 30* | F-84B |
| 2SC 308 | " | " | 100 | 5 | 500 | 800 | 200 | 1 | 90 | 65 | 10 | 150 | 10 | −30 | | 90* | 10 | 30* | F-84B |
| 2SC 309 | " | " | 120 | 5 | 500 | 800 | 200 | 1 | 90 | 65 | 10 | 150 | 10 | −30 | | 120* | 6 | 30* | F-84B |
| 2SC 310 | " | " | 140 | 5 | 500 | 800 | 200 | 10nA | 90 | 65 | 10 | 150 | 10 | −30 | | 120* | 6 | 30* | F-84B |
| 2SC 311 | | | | | | | | | | | | | | | | | | | |
| 2SC 312 | | | | | | | | | | | | | | | | | | | |
| 2SC 313 | RF.Conv.Mix Osc | Si.EP | 30 | 2 | 50 | 200 | 200 | 0.5 | 10 | 40 | 10 | 10 | 10 | −10 | 50 | 100* | 1 | $Ccrbb'$ 10pS | F-9 |
| 2SC 314 | PA | Si.TMe | 75 | 4 | 1.2A | 2W | 175 | 10 | 40 | | | | 4 | −100 | 25 | 70* | 20 | 27 | F-83 |
| 2SC 315 | " | " | 75 | 4 | 1.2A | 2W | 175 | 10 | 40 | | | | 4 | −100 | 25 | 80* | 20 | 25 | F-83 |
| 2SC 316 | RF.Conv.Mix Osc.PA | Si.P | 45 | 5 | 30 | 300 | 175 | 0.01 | 10 | | | | 5 | −2 | 300 | 50* | 4.5 | 80 | F-49C |
| 2SC 317 | SW | Si.Me | 70 | 5 | 100 | 350 | 175 | 0.1 | 20 | 100 | 6 | 10 | 6 | −10 | | 240* | 4.5 | 75 | F-12A |
| 2SC 318 | RF | Si.E | 50 | 5 | 100 | 300 | 175 | 0.2 | 25 | 90 | 3 | 1 | 6 | −2 | | | 3 | $Ccrbb'$ 100pS | F-49C |
| 2SC 319 | RF.Conv.Mix Osc.PA | Si.EP | 40 | 4 | 300 | 1.75W ($T_C$ = 25°C) | 175 | 1 | 20 | | | | 10 | −30 | 40 | 500* | 6.5 | 40* | F-84A |
| 2SC 320 | " | " | 40 | 4 | 500 | 2.5W ($T_C$ = 25°C) | 175 | 1 | 20 | | | | 100 | −30 | 40 | 600* | 6.5 | 40* | F-84 |
| 2SC 321 | SW | ' | 40 | 5 | 200 | 360 | 175 | 1 | 20 | 40 | 1 | 10 | 10 | −20 | | 450* | 4 | | F-49C |
| 2SC 322 | " | " | 40 | 5 | 200 | 360 | 175 | 0.25 | 20 | 40 | 1 | 10 | 10 | −20 | | 450* | 4 | | F-49C |
| 2SC 323 | " | " | 40 | 5 | 100 | 250 | 175 | 1 | 30 | 50 | 1 | 10 | | | | | | | F-49C |
| 2SC 324 | RF.Conv.Mix Osc | Si.P | 20 | 3 | 25 | 200 | 175 | 2 | 12 | | | | 6 | −2 | 70 | 180* | 4.5 | 60* | F-49C |
| 2SC 325 | Si.EP | | 12 | 3 | 50 | 250 | 175 | 0.02 | 6 | | | | 5 | −5 | 110 | 1000* | 1.7 | 90* | F-50C |
| 2SC 326 | " | " | 20 | 3 | 50 | 250 | 175 | 0.02 | 6 | | | | 5 | −5 | 110 | 1000* | 1.7 | 90* | F-50C |
| 2SC 327 | " | " | 30 | 3 | 50 | 250 | 175 | 0.02 | 6 | | | | 5 | −5 | 110 | 1000* | 1.7 | 90* | F-50C |
| 2SC 328 | " | " | 30 | 3 | 20 | 200 | 175 | 0.2 | 15 | | | | 6 | −5 | 60 | 1500 | 0.65 | $Ccrbb'$ 5pF | F-50C |
| 2SC 329 | " | " | 30 | 3 | 20 | 200 | 175 | 0.2 | 15 | | | | 6 | −5 | 60 | 1500* | 0.65 | $Ccrbb'$ 5pS | F-50C |
| 2SC 330 | RF.LN | " | 20 | 3 | 20 | 200 | 175 | 0.5 | 15 | 60 | 10 | 10 | 10 | −10 | | 3500* | 0.75 | $Ccrbb'$ 2.5pS | F-128 |
| 2SC 331 | " | " | 20 | 3 | 20 | 200 | 175 | 0.5 | 15 | 60 | 10 | 10 | 10 | −10 | | 3500* | 0.75 | $Ccrbb'$ 1.5pS | F-128 |
| 2SC 332 | RF.SW | Si.EP | 30 | 5 | 200 | 150 | 175 | 0.1 | 15 | 75 | 1 | 10 | 10 | −10 | 95 | 450* | 3 | 70* | F-48C |
| 2SC 333 | " | " | 40 | 5 | 200 | 150 | 175 | 0.1 | 15 | 75 | 1 | 10 | 10 | −10 | 95 | 450* | 3 | 70* | F-48C |
| 2SC 334 | " | " | 60 | 5 | 200 | 150 | 175 | 0.1 | 15 | 65 | 1 | 10 | 10 | −10 | 85 | 450* | 2 | 70* | F-48C |
| 2SC 335 | " | " | 50 | 5 | 200 | 250 | 175 | 0.1 | 15 | 75 | 1 | 10 | 10 | −10 | 100 | 450* | 3 | 70* | F-49C |
| 2SC 336 | " | " | 60 | 5 | 200 | 150 | 175 | 0.1 | 15 | 75 | 1 | 10 | 10 | −10 | 100 | 450* | 3 | 70* | F-49C |
| 2SC 337 | RF | Si.P | 20 | 5 | 20 | 360 | 175 | 0.1 | 15 | 73 | 1 | 2 | 5 | −1 | 80 | 100* | 3 | 50* | F-49C |
| 2SC 338 | " | " | 70 | 5 | 20 | 360 | 175 | 0.1 | 15 | 73 | 1 | 2 | 5 | −1 | 80 | 100* | 3 | 50* | F-49C |
| 2SC 339 | " | " | 110 | 5 | 20 | 360 | 175 | 0.1 | 15 | 73 | 1 | 2 | 5 | −1 | 80 | 100* | 3 | 50* | F-49C |
| 2SC 340 | " | " | 20 | 5 | 20 | 100 | 100 | 0.1 | 15 | 170 | 1 | 2 | 5 | −1 | 2200 | 130* | 1.4 | 60* | F-21 |
| 2SC 341 | " | " | 70 | 5 | 20 | 100 | 100 | 0.1 | 15 | 73 | 1 | 2 | 5 | −1 | 80 | 120* | 1.4 | 60* | F-21 |
| 2SC 342 | " | " | 110 | 5 | 20 | 100 | 100 | 0.1 | 15 | 73 | 1 | 2 | 5 | −1 | 80 | 120* | 1.4 | 60* | F-21 |
| 2SC 343 | RF.SW | Si.EP | 35 | 5 | 500 | 600 | 175 | 0.4 | 20 | 55 | 1 | 150 | 10 | −30 | 70 | 430* | 6.5 | 45 | F-84A |
| 2SC 344 | " | " | 60 | 5 | 500 | 600 | 175 | 0.4 | 20 | 55 | 1 | 150 | 10 | −30 | 70 | 430* | 6 | 45* | F-84A |
| 2SC 345 | " | " | 80 | 5 | 500 | 600 | 175 | 0.4 | 20 | 55 | 1 | 150 | 10 | −30 | 70 | 430* | 5 | 45* | F-84A |
| 2SC 346 | RF.SW | " | 45 | 5 | 700 | 600 | 175 | 1 | 40 | 70 | 1 | 100 | 10 | −30 | 75 | 320* | 10 | 40* | F-84A |
| 2SC 347 | " | " | 60 | 5 | 700 | 600 | 175 | 1 | 40 | 70 | 1 | 100 | 10 | −30 | 75 | 320* | 10 | 40* | F-84A |
| 2SC 348 | " | " | 60 | 5 | 700 | 600 | 175 | 1 | 40 | 70 | 1 | 100 | 10 | −30 | 75 | 320* | 7.5 | 40* | F-84A |
| 2SC 349 | " | " | 90 | 5 | 700 | 600 | 175 | 1 | 40 | 70 | 1 | 100 | 10 | −30 | 75 | 320* | 7.5 | 40* | F-84A |
| 2SC 350 | RF.AF.LN | Si.Me | 30 | 5 | 100 | 200 | 175 | 0.01 | 20 | 120 | 6 | 0.1 | 6 | −1 | 160 | 180* | 7 | 60 | F-12A |
| 2SC 351 | RF | Si.P | 40 | 2 | 20 | 200 | 150 | 0.5 | 18 | | | | 10 | −4 | 50 | 600* | 1.4 | 15 | F-33 |
| 2SC 352 | " | Si.EP | 50 | 5 | 100 | 750 | 175 | 0.2 | 25 | 90 | 3 | 1 | 6 | −2 | | | | | F-84C |
| 2SC 353 | " | " | 100 | 5 | 100 | 750 | 175 | 0.2 | 25 | 90 | 3 | 1 | 6 | −2 | | | | | F-84C |
| 2SC 354 | RF.PA | Si.TP | 40 | 4 | 1.5A | 7W ($T_C$ = 25°C) | 200 | 1 | 30 | 100 | 4 | 500 | 4 | −100 | 50 | 180* | 20 | 10* | F-84B |
| 2SC 355 | PA | " | 75 | 4 | 2.5A | 15W ($T_C$ = 25°C) | 200 | 1 | 30 | 100 | 4 | 500 | 4 | −100 | 50 | 180* | 20 | 10* | F-111 |
| 2SC 356 | SW | Si.EP | 30 | 5 | 200 | 300 | 175 | 1 | 20 | 60 | 1 | 10 | | | | | | | F-46C |
| 2SC 357 | | | | | | | | | | | | | | | | | | | |
| 2SC 358 | | | | | | | | | | | | | | | | | | | |
| 2SC 359 | | | | | | | | | | | | | | | | | | | |
| 2SC 360 | RF | Si.P | 30 | 5 | 100 | 250 | 175 | 1 | 15 | | | | 10 | −10 | 100 | 150* | 5 | 50 | F-49C |
| 2SC 361 | RF.Conv.Mix Osc | " | 25 | 5 | 100 | 200 | 125 | 0.5 | 18 | 40-160 | 12 | 2 | 6 | −2 | 80 | 150* | 4 | 90 | F-33 |

**Pin Configurations are 1. Emitter, 2. Base, 3. Collector, 4. Shield, unless otherwise specified. (Outline Dimensions: mm)**

| TYPE NO. | USES | MATERIAL STRUCTURE | $V_{CBO}$ (V) | $V_{EBO}$ (V) | $I_C$ (mA) | Pd (mW) | Tj (°C) | $I_{CBO}$ (uA) | $V_{CB}$(V) | VALUE OF DC/PULSE hFE | $V_{CE}$(V) | $I_C$(mA) | BIAS $V_{CB}$(V) | $I_e$(mA) | hfe hfb* | fab fT (Mc) | Cob (pF) | $r_{bb'}$ $h_{ie(real)}$* (Ω) | CASE STYLE |
|---|---|---|---|---|---|---|---|---|---|---|---|---|---|---|---|---|---|---|---|
| 2SC 362 | RF.Conv.Mix Osc | Si.P | 25 | 5 | 100 | 200 | 125 | 0.5 | 18 | 70-280 | 12 | 2 | 6 | −2 | 140 | 150* | 4 | 90 | F-33 |
| 2SC 363 | " | " | 25 | 5 | 100 | 200 | 125 | 0.5 | 18 | 50-500 | 12 | 2 | 6 | −2 | 250 | 150* | 4 | 90 | F-33 |
| 2SC 364 | RF.Conv. Mix.Osc | " | 25 | 5 | 40 | 200 | 125 | 0.5 | 18 | | | | 6 | −2 | 400 | 150* | 4 | 100 | F-33 |
| 2SC 365 | RF.Conv. Mix.Osc | | | | | | | | | | | | | | | | | | |
| 2SC 366 | RF.Conv.Mix Osc | Si.P | 50 | 5 | 400 | 300 | 125 | 0.5 | 18 | | | | 10 | −10 | 60 | 120* | 10 | 70 | F-33 |
| 2SC 367 | " | Si.EP | 40 | 5 | 800 | 300 | 125 | 0.5 | 18 | | | | 10 | −10 | 70 | 120* | 10 | 60 | F-33 |
| 2SC 368 | | " | 25 | 5 | 100 | 250 | 175 | 0.1 | 18 | | | | 10 | −1 | 250 | 150* | 1.5 | 120 | F-49C |
| 2SC 369 | " | " | 18 | 5 | 100 | 200 | 125 | 0.1 | 18 | | | | 10 | −1 | 250 | 150* | 1.5 | 120 | F-33 |
| 2SC 370 | " | " | 30 | 4 | 100 | 200 | 125 | 1 | 18 | | | | 6 | −1 | 40 | 150* | 2.5 | 80 | F-33 |
| 2SC 371 | " | " | 30 | 4 | 100 | 200 | 125 | 1 | 18 | | | | 6 | −1 | 80 | 150* | 2.5 | 80 | F-33 |
| 2SC 372 | " | Si.E | 35 | 4 | 100 | 200 | 125 | 0.5 | 18 | 70-240 | 12 | 2 | 10 | −1 | | 200* | 2 | 50 | F-33 |
| 2SC 373 | ;; | " | 35 | 4 | 100 | 200 | 125 | 0.5 | 18 | 200-400 | 12 | 2 | 10 | −1 | | 200* | 2 | 50 | F-33 |
| 2SC 374 | " | Si.EP | 30 | 4 | 100 | 200 | 125 | 1 | 18 | | | | 6 | −1 | 400 | 150* | 2.5 | 80 | F-33 |
| 2SC 375 | RF | " | 20 | 2 | 50 | 200 | 125 | 0.5 | 15 | | | | 10 | −8 | 100 | 600* | 1.5 | 20 | F-33 |
| 2SC 376 | " | " | 70 | 4 | 100 | 200 | 125 | 1 | 18 | | | | 6 | −1 | 60 | 150* | 2.5 | 40 | F-33 |
| 2SC 377 | " | " | 35 | 4 | 30 | 200 | 125 | 0.5 | 18 | | | | 12 | −2 | 70 | 150* | 2 | Ccrbb' 40pS | F-33 |
| 2SC 378 | RF.Conv.Mix | " | 35 | 4 | 30 | 200 | 125 | 0.5 | 18 | 40-240 | 12 | 2 | 10 | −1 | | 150* | 2 | Ccrbb' 40pS | F-33 |
| 2SC 379 | RF.Conv.Mix Osc | " | 30 | 4 | 100 | 200 | 125 | 0.5 | 18 | | | | 10 | −2 | 70 | 300* | 2 | 40 | F-33 |
| 2SC 380 | IF | Si.P | 35 | 4 | 30 | 200 | 125 | 0.5 | 18 | 40-240 | 12 | 2 | 10 | −1 | | 250* | 2 | 20 | F-33 |
| 2SC 381 | " | Si.EP | 40 | 4 | 20 | 100 | 125 | 0.5 | 18 | 25-140 | 6 | 1 | 6 | −1 | | 250* | 2 | Ccrbb' 10pS | F-33 |
| 2SC 382 | " | Si.P | 40 | 2 | 50 | 200 | 125 | 0.5 | 18 | 30 | 10 | 4 | 10 | −4 | | 600* | Cre 1.0 | 18 | F-33 |
| 2SC 383 | " | Si.EP | 75 | 3 | 50 | 300 | 125 | 0.025 | 10 | 20-100 | 12.5 | 12.5 | 12 | −12.5 | | 300* | 0.8-2.0 | <25 | F-33 |
| 2SC 384 | RF.Conv. Mix.Osc | " | 20 | 2 | 50 | 200 | 125 | 0.5 | 15 | | | | 6 | −1 | 50 | 500* | 1.4 | 25 | F-33 |
| 2SC 385 | " | " | 20 | 2 | 20 | 200 | 125 | 0.5 | 15 | | | | 3 | −8 | 80 | 600* | 1.6 | 20 | F-33 |
| 2SC 386 | RF.Conv. Mix | " | 20 | 2 | 20 | 200 | 125 | 0.5 | 15 | | | | 3 | −8 | 80 | 500* | 1.6 | 18 | F-33 |
| 2SC 387 | RF.Conv.Mix Osc | " | 20 | 2 | 50 | 200 | 125 | 0.5 | 15 | | | | 10 | −8 | 100 | 900* | 1.4 | 15 | F-33 |
| 2SC 388 | RF.Conv. Mix | " | 20 | 2 | 20 | 200 | 125 | 0.5 | 15 | | | | 3 | −8 | 80 | 450* | 1.6 | 18 | F-33 |
| 2SC 389 | RF | Si.P | 20 | 3 | 20 | 150 | 150 | 0.1 | 10 | | | | 5 | −4 | 50 | 500* | 0.8 | 10 | F-50C |
| 2SC 390 | " | Si.E | 30 | 3 | 20 | 150 | 150 | 0.1 | 20 | 40-200 | 10 | 2 | 10 | −2 | | 1000* | 0.5 | Ccrbb' < 6 pS | F-50C |
| 2SC 391 | " | Si.EP | 20 | 2 | 20 | 150 | 150 | 1 | 10 | | | | 10 | −2 | 70 | 1200* | 1 | Ccrbb' 5 pS | F-50C |
| 2SC 392 | " | Si.P | 30 | 3 | 20 | 150 | 150 | 0.1 | 15 | 40-300 | 10 | 2 | 10 | −2 | | 800* | | | F-50C |
| 2SC 393 | " | " | 20 | 2 | 20 | 200 | 150 | 50 | 10 | | | | 5 | −4 | 100 | | | | F-50C |
| 2SC 394 | RF.Conv.Mix | Si.EP | 25 | 4 | 100 | 200 | 125 | 0.5 | 18 | 40-240 | 12 | 2 | 10 | −1 | | 200* | 2 | Ccrbb' 45pS | F-33 |
| 2SC 395 | SW | " | 20 | 3 | 200 | 250 | 175 | 1 | 15 | 50 | 1 | 1 | | | | | | Ccrbb' 3 pS | F-49C |
| 2SC 396 | RF | " | 30 | 3 | 200 | 250 | 175 | 1 | 15 | | | | 10 | −10 | 40 | 450* | 3 | 60 | F-49C |
| 2SC 397 | RF.Conv.Mix Osc | " | 20 | 2 | 50 | 200 | 175 | 0.5 | 15 | | | | 10 | −8 | 80 | 800* | 1.9 | 30 | F-50C |
| 2SC 398 | RF | Si.P | 20 | 3 | 20 | 200 | 150 | 0.05 | 10 | 20-200 | 5 | 4 | 10 | −4 | | 250* | | <25 | F-50C |
| 2SC 399 | RF.Conv | " | 20 | 3 | 20 | 200 | 150 | 0.05 | 10 | 20-200 | 5 | 4 | 10 | −4 | | 250* | | <25 | F-50C |
| 2SC 400 | RF.SW | Si.E | 30 | 5 | 100 | 250 | 175 | 0.5 | 15 | 30-350 | 1 | 10 | 10 | −10 | | 300* | 4 | 40 | F-49C |
| 2SC 401 | RF.Conv.Mix Osc SW | " | 50 | 5 | 100 | 100 | 120 | 0.2 | 25 | 90 | 3 | 1 | 6 | −1 | 110 | 140* | 2.5 | Ccrbb' 80pS | F-38 |
| 2SC 402 | RF.Conv.Mix Osc | " | 50 | | 100 | 100 | 120 | 0.2 | 25 | 90 | 3 | 1 | 6 | −1 | 110 | 140* | 2.5 | Ccrbb' 80pS | F-38 |
| 2SC 403 | " | " | 50 | | 100 | 100 | 120 | 0.2 | 25 | 60 | 3 | 1 | 6 | −1 | 75 | 140* | 2.2 | Ccrbb' 80pS | F-38 |
| 2SC 404 | RF | Si.E | 50 | 3 | 50 | 100 | 120 | 0.2 | 25 | 90 | 3 | 1 | 6 | −1 | 120 | 140* | 2.2 | | F-38 |
| 2SC 405 | SW | Ge.A | 25 | 15 | 200 | 150 | 100 | 10 | 25 | 60 | 1 | 100 | | | | | | | F-68 |
| 2SC 406 | " | " | 25 | 15 | 200 | 150 | 100 | 10 | 25 | 120 | 1 | 100 | | | | | | | F-68 |
| 2SC 407 | " | Si.DB | 150 | 4 | 10A | 100W ($T_C$=25°C) | 150 | 50mA | 150 | 20 | 5 | 5A | 10 | −2A | | fae0.4 | 300 | | F-102 |
| 2SC 408 | " | " | 150 | 4 | 10A | 100W ($T_C$=25°C) | 150 | 50mA | 150 | 40 | 5 | 5A | 10 | −2A | | fae0.4 | 300 | | F-102 |
| 2SC 409 | " | " | 200 | 4 | 10A | 100W ($T_C$=25°C) | 150 | 20mA | 200 | 20 | 5 | 5A | 10 | −2A | | fae0.4 | 300 | | F-102 |
| 2SC 410 | " | " | 200 | 4 | 10A | 100W ($T_C$=25°C) | 150 | 20mA | 200 | 40 | 5 | 5A | 10 | −2A | | fae0.4 | 300 | | F-102 |
| 2SC 411 | " | " | 300 | 4 | 10A | 100W ($T_C$=25°C) | 150 | 5mA | 300 | 20 | 5 | 5A | 10 | −2A | | fae0.4 | 300 | | F-102 |
| 2SC 412 | " | " | 300 | 4 | 10A | 100W ($T_C$=25°C) | 150 | 5mA | 300 | 40 | 5 | 5A | 10 | −2A | | fae0.4 | 300 | | F-102 |
| 2SC 413 | PA.SW | Si.EP | 60 | 5 | 1.5A | 20W ($T_C$=25°C) | 175 | 10 | 50 | 50 | 10 | 150 | 10 | −100 | 60 | 180* | 20 | 10* | F-83 |
| 2SC 414 | " | " | 90 | 5 | 1.5A | 20W ($T_C$=25°C) | 175 | 2 | 50 | 50 | 10 | 150 | 10 | −100 | 60 | 180* | 17 | 10* | F-83 |
| 2SC 415 | " | " | 120 | 5 | 1.5A | 20W ($T_C$=25°C) | 175 | 2 | 50 | 50 | 10 | 150 | 10 | −100 | 60 | 180* | 14 | 10* | F-83 |
| 2SC 416 | SW | " | 90 | 5 | 1.5A | 2W | 175 | 5 | 80 | 60 | 1 | 400 | | | | | | | F-83 |
| 2SC 417 | | | | | | | | | | | | | | | | | | | |
| 2SC 418 | | | | | | | | | | | | | | | | | | | |
| 2SC 419 | | | | | | | | | | | | | | | | | | | |
| 2SC 420 | SW | Si.EP | 25 | 5 | 80 | 150 | 175 | 0.1 | 15 | 130 | 3 | 2 | | | | hFE1/hFE2 < 0.13 (3V, 2mA) | | | F-87C |
| 2SC 421 | | | | | | | | | | | | | | | | | | | |

**Pin Configurations are 1. Emitter, 2. Base, 3. Collector, 4. Shield, unless otherwise specified. (Outline Dimensions: mm)**

| TYPE NO. | USES | MATERIAL STRUCTURE | $V_{CBO}$ (V) | $V_{EBO}$ (V) | $I_C$ (mA) | $P_d$ (mW) | $T_j$ (°C) | $I_{CBO}$ (uA) | VALUE OF DC/PULSE | | | | BIAS | | hfe hfb* | fab fT (Mc) | Cob (pF) | $r_{bb'}$ $h_{ie(real)}$* (Ω) | CASE STYLE |
|---|---|---|---|---|---|---|---|---|---|---|---|---|---|---|---|---|---|---|---|
| | | | | | | | | | $V_{CB}$(V) | hFE | $V_{CE}$(V) | $I_C$(mA) | $V_{CB}$(V) | $I_e$(mA) | | | | | |
| 2SC 422 | | | | | | | | | | | | | | | | | | | |
| 2SC 423 | RF.Conv.Mix Osc.PA | Si.EP | 40 | 4 | 300 | 500 | 175 | 1 | 35 | 80 | 10 | 20 | 10 | −20 | | 500* | 5 | $C_{rbb'}$ 120pS | F-84B |
| 2SC 424 | " | " | 40 | 4 | 300 | 200 | 175 | 1 | 35 | 80 | 10 | 20 | 10 | −20 | | 500* | 5 | $C_{rbb'}$ 120pS | F-84B |
| 2SC 425 | " | " | 20 | 4 | 300 | 500 | 175 | 1 | 15 | 80 | 10 | 20 | 10 | −20 | | 500* | 5 | $C_{rbb'}$ 120pS | F-84B |
| 2SC 426 | " | " | 20 | 4 | 300 | 200 | 175 | 1 | 15 | 80 | 10 | 20 | 10 | −20 | | 500* | 5 | $C_{rbb'}$ 120pS | F-84B |
| 2SC 427 | RF.Conv.Mix Osc.PA.SW | " | 40 | 5 | 100 | 300 | 175 | 1 | 35 | 80 | 6 | 1 | 10 | −20 | 50 | 180* | 5 | 60 | F-49C |
| 2SC 428 | " | " | 20 | 5 | 100 | 300 | 175 | 1 | 15 | 80 | 6 | 1 | 10 | −20 | 50 | 180* | 5 | 60 | F-49C |
| 2SC 429 | RF.Conv.Mix Osc | " | 25 | 2 | 10 | 100 | 150 | 1 | 12 | | | | 6 | −1 | 27 | 380* | 1.2 | $C_{rbb'}$ 19pS | F-23 |
| 2SC 430 | " | " | 25 | 2 | 10 | 100 | 150 | 1 | 12 | | | | 6 | −1 | 46 | 420* | 1.2 | $C_{rbb'}$ 19pS | F-23 |
| 2SC 431 | SW | Si.DB | 150 | 4 | 30A | 200W (Tc = 25°C) | 150 | 50mA | 150 | 20 | 5 | 10A | 10 | −2A | | $f_{ae}$ = 0.4 | 700 | | F-105 |
| 2SC 432 | " | " | 150 | 4 | 30A | 200W (Tc = 25°C) | 150 | 50mA | 150 | 40 | 5 | 10A | 10 | −2A | | $f_{ae}$ = 0.4 | 700 | | F-105 |
| 2SC 433 | " | " | 200 | 4 | 30A | 200W (Tc = 25°C) | 150 | 20mA | 200 | 20 | 5 | 10A | 10 | −2A | | $f_{ae}$ = 0.4 | 700 | | F-105 |
| 2SC 434 | " | " | 200 | 4 | 30A | 200W (Tc = 25°C) | 150 | 20mA | 200 | 40 | 5 | 10A | 10 | −2A | | $f_{ae}$ = 0.4 | 700 | | F-105 |
| 2SC 435 | " | " | 300 | 4 | 30A | 200W (Tc = 25°C) | 150 | 5mA | 300 | 20 | 5 | 10A | 10 | −2A | | $f_{ae}$ = 0.4 | 700 | | F-105 |
| 2SC 436 | " | " | 300 | 4 | 30A | 200W (Tc = 25°C) | 150 | 5mA | 300 | 40 | 5 | 10A | 10 | −2A | | $f_{ae}$ = 0.4 | 700 | | F-105 |
| 2SC 437 | PA | Si.TP | 100 | 5 | 2A | 13W (Tc = 25°C) | 175 | 10 | 28 | 20 | 28 | 350 | 28 | −300 | 30 | 210* | 34 | 8* | F-83 |
| 2SC 438 | " | " | 75 | 5 | 2A | 13W (Tc = 25°C) | 175 | 100 | 28 | 20 | 28 | 350 | 28 | −300 | 30 | 210* | 45 | 8* | F-83 |
| 2SC 439 | RF.Conv.Mix Osc | " | 25 | 5 | 100 | 500 | 200 | 0.5 | 15 | 50 | 10 | 0.1 | 10 | −1 | 100 | 420* | 3.5 | 65* | F-84B |
| 2SC 440 | " | " | 25 | 5 | 100 | 500 | 200 | 0.5 | 15 | 50 | 10 | 0.1 | 10 | −1 | 100 | 420* | 3.5 | 65* | F-84B |
| 2SC 441 | " | " | 25 | 5 | 100 | 500 | 200 | 0.01 | 15 | 50 | 10 | 0.1 | 10 | −1 | 100 | 420* | 3.5 | 65* | F-84B |
| 2SC 442 | " | " | 50 | 5 | 100 | 500 | 200 | 0.01 | 15 | 50 | 10 | 0.1 | 10 | −1 | 100 | 420* | 3.5 | 65* | F-84B |
| 2SC 443 | PA | " | 50 | 3 | 500 | 800 | 200 | 0.05 | 28 | 20 | 28 | 100 | 28 | −5 | 15 | 200* | 10 | | F-84B |
| 2SC 444 | " | " | 60 | 4 | 500 | 800 | 200 | 0.01 | 28 | 25 | 28 | 100 | 28 | −5 | 20 | 220* | 10 | | F-84B |
| 2SC 445 | " | " | 80 | 5 | 500 | 800 | 200 | 0.05 | 28 | 30 | 28 | 100 | 28 | −5 | 25 | 220* | 10 | | F-84B |
| 2SC 446 | " | " | 60 | 4 | 500 | 800 | 200 | 0.01 | 28 | 25 | 28 | 100 | 28 | −5 | 20 | 220* | 10 | | F-84B |
| 2SC 447 | " | " | 75 | 4 | 2A | 5W | 175 | 50 | 28 | 20 | 28 | 350 | 28 | −100 | 30 | 210* | 29 | 8* | F-112 |
| 2SC 448 | " | " | 100 | 5 | 2A | 5W | 175 | 10 | 30 | 20 | 28 | 350 | 28 | −100 | 30 | 190* | 29 | 8* | F-112 |
| 2SC 449 | " | " | 75 | 5 | 2A | 5W | 175 | 100 | 30 | 20 | 28 | 350 | 28 | −100 | 30 | 190* | 29 | 8* | F-112 |
| 2SC 450 | " | " | 60 | 4 | 2A | 5W | 175 | 100 | 30 | 20 | 28 | 350 | 28 | −100 | 30 | 210* | 29 | 8* | F-112 |
| 2SC 451 | " | " | 100 | 4 | 1.2A | 25W (Tc = 25°C) | 200 | 100 | 28 | 15 | 28 | 350 | 28 | −100 | 30 | 180* | 20 | 15* | F-112 |
| 2SC 452 | " | " | 100 | 4 | 1.2A | 25W (Tc = 25°C) | 200 | 500 | 28 | >15 | 28 | 350 | 28 | −100 | 30 | 180* | 20 | 15* | F-112 |
| 2SC 453 | " | " | 90 | 4 | 1.2A | 25W (Tc = 25°C) | 200 | 500 | 28 | >10 | 28 | 350 | 28 | −100 | 30 | 170* | 20 | 15* | F-112 |
| 2SC 454 | RF.Conv.Mix Osc | Si.EPa | 30 | 5 | 100 | 200 | 125 | 0.5 | 18 | | | | 12 | −2 | 150 | 230* | 1.8 | $C_{rbb'}$ 100pS | F-37 |
| 2SC 455 | " | " | 30 | 5 | 100 | 200 | 125 | 1 | 18 | | | | 12 | −2 | 40 | 230* | 1.8 | 40 | F-37 |
| 2SC 456 | PA | Si.EP | 50 | 1.5 | 600 | 750 | 175 | 1 | 12 | 12 | 6 | 80 | 6 | −80 | 20 | 200* | 10 | $C_{rbb'}$ 100pS | F-84A |
| 2SC 457 | Diff | " | 25 | 5 | 50 | 300 | 175 | 0.1 | 10 | 80 | 1 | 1 | 6 | −2 | | 200* | 4.5 | 40* | F-87B |
| 2SC 458 | RF | Si.EPa | 30 | 5 | 100 | 200 | 125 | 0.5 | 18 | 140 | 6 | 2 | 5 | −0.1 | 130 | 230* | 1.8 | 100 | F-37 |
| 2SC 459 | RF.Conv.Mix Osc. | " | 30 | 5 | 100 | 200 | 125 | 1 | 18 | 160 | 12 | 2 | 12 | −2 | 110 | 230* | 1.8 | 100 | F-37 |
| 2SC 460 | " | Si.P | 30 | 5 | 100 | 200 | 125 | 0.5 | 18 | | | | 12 | −2 | 85 | 230* | 1.8 | 40 | F-37 |
| 2SC 461 | " | " | 30 | 5 | 100 | 200 | 125 | 0.5 | 18 | | | | 12 | −2 | 85 | 230* | 1.8 | 40 | F-37 |
| 2SC 462 | RF | " | 40 | 4 | 50 | 200 | 200 | 0.5 | 20 | | | | 10 | −4 | 90 | 600* | 0.9 | | F-9 |
| 2SC 463 | " | " | 40 | 4 | 50 | 200 | 200 | 0.5 | 20 | | | | 10 | −4 | 90 | 600* | 0.8 | | F-9 |
| 2SC 464 | RF.Conv. Mix.Osc | " | 30 | 2 | 50 | 200 | 200 | 0.5 | 10 | | | | 6 | −1 | 40 | 1100* | 1 | $C_{rbb'}$ 10pS | F-9 |
| 2SC 465 | " | " | 30 | 2 | 50 | 200 | 200 | 0.5 | 10 | | | | 6 | −1 | 40 | 1100* | 1 | $C_{rbb'}$ 10pS | F-9 |
| 2SC 466 | " | " | 30 | 2 | 50 | 200 | 200 | 0.5 | 10 | | | | 6 | −1 | 40 | 1100* | 1 | $C_{rbb'}$ 10pS | F-9 |
| 2SC 467 | SW | Si.EP | 20 | 4 | 50 | 300 | 175 | 0.5 | 10 | 40 | 1 | 10 | | | | | | | F-49C |
| 2SC 468 | " | " | 40 | 5 | 200 | 200 | 175 | 1 | 20 | 60 | 1 | 10 | 10 | −20 | | 450* | 4 | | F-8A |
| 2SC 469 | RF.Conv.Mix Osc | " | 20 | 5 | 30 | 100 | 125 | 0.1 | 15 | 90 | 3 | 0.5 | 6 | −1 | 100 | 250* | 1.6 | 50* | F-23 |
| 2SC 470 | RF | " | 90 | 5 | 100 | 750 | 175 | 1 | 25 | 60 | 5 | 3 | 6 | −5 | | 150* | 2 | $C_{rbb'}$ 20pS | F-84C |
| 2SC 471 | AF | Si.Me | 30 | 5 | 100 | 200 | 175 | 0.1 | 20 | | | | 6 | −0.1 | 50 | 160* | 7 | 70 | F-8A |
| 2SC 472 | SW | " | $V_{CBX}$ 30 | 5 | 100 | 200 | 175 | 0.1 | 20 | 100 | 6 | 10 | | | | 180* | 7 | 60 | F-8A |
| 2SC 473 | " | Si.TMe | 70 | 5 | 100 | 200 | 175 | 0.1 | 20 | 80 | 6 | 10 | | | | 180* | 4.5 | 75 | F-8A |
| 2SC 474 | " | Si.Me | $V_{CBX}$ 70 | 5 | 100 | 200 | 175 | 0.1 | 20 | 60 | 6 | 10 | | | | 160* | 7 | | F-8A |
| 2SC 475 | FR.AF LN | Si.EP | 20 | 5 | 100 | 150 | 150 | 0.1 | 15 | 300 | 3 | 0.5 | 3 | −0.5 | 350 | 100* | | | F-23 |
| 2SC 476 | RF.AF | " | 20 | 5 | 100 | 150 | 150 | 0.1 | 15 | 350 | 3 | 0.5 | 3 | −0.5 | 400 | 100* | | | F-23 |
| 2SC 477 | RF | " | 50 | 5 | 30 | 140 | 175 | 1 | 10 | 170 | 10 | 1 | | | | 230* | Cre 0.5pS | | F-49C |
| 2SC 478 | RF.Conv.Mix Osc | Si.EP | 50 | 1.5 | 120 | 300 | 175 | 1 | 12 | 20 | 12 | 20 | 12 | −1 | 15 | 180* | 4 | $C_{rbb'}$ 75pS | F-49C |
| 2SC 479 | SW | " | 60 | 5 | 600 | 650 | 175 | 1 | 40 | 80 | 1 | 100 | | | | | | | F-84A |
| 2SC 480 | " | " | 60 | 5 | 600 | 800 | 175 | 1 | 30 | 80 | 1 | 150 | | | | | | | F-84A |
| 2SC 481 | PA | " | 60 | 5 | 1A | 600 | 150 | 10 | 30 | 35 | 2 | 150 | 6 | −100 | | >100* | <30 | <25 | F-84B |

**Pin Configurations are 1. Emitter, 2. Base, 3. Collector, 4. Shield, unless otherwise specified. (Outline Dimensions: mm)**

| TYPE NO. | USES | MATERIAL STRUCTURE | $V_{CBO}$ (V) | $V_{EBO}$ (V) | $I_C$ (mA) | $P_d$ (mW) | $T_j$ (°C) | $I_{CBO}$ (uA) | VALUE OF DC/PULSE $V_{CB}$(V) | $h_{FE}$ | $V_{CE}$(V) | $I_C$(mA) | BIAS $V_{CB}$(V) | $I_e$(mA) | hfe hfb* | fab fT (Mc) | Cob (pF) | $r_{bb'}$ $h_{ie}$(real)* (Ω) | CASE STYLE |
|---|---|---|---|---|---|---|---|---|---|---|---|---|---|---|---|---|---|---|---|
| 2SC 482 | RF.PA | Si.E | 40 | 5 | 600 | 600 | 175 | 1 | 30 | 30-300 | 2 | 150 | 10 | —10 | | >50* | 15 | 7 | F-84B |
| 2SC 483 | PA | Si.TMe | 100 | 5 | 1A | 15W (Tc = 25°C) | 150 | 1mA | 30 | 120 | 2 | 150 | 2 | —30 | 100 | 25* | 80 | 5 | F-99 |
| 2SC 484 | " | " | 150 | 5 | 1.5A | 800 | 175 | 10 | 30 | 30-300 | 2 | 200 | 10 | —30 | | 20* | 50 | 10 | F-84B |
| 2SC 485 | " | " | 100 | 5 | 1.5A | 800 | 175 | 10 | 30 | 30-300 | 2 | 200 | 10 | —30 | | 20* | 50 | 10 | F-84B |
| 2SC 486 | " | " | 70 | 5 | 1.5A | 800 | 175 | 10 | 30 | 30-300 | 2 | 200 | 10 | —200 | | 20* | 50 | 10 | F-84B |
| 2SC 487 | " | " | 110 | 5 | 1.5A | 15W (Tc = 25°C) | 150 | 1mA | 30 | 120 | 2 | 200 | 2 | —200 | 100 | 20* | 85 | 5 | F-99 |
| 2SC 488 | " | " | 140 | 5 | 3A | 16W (Tc = 25°C) | 150 | 3mA | 50 | | | | 5 | —0.5A | 80 | 10* | 130 | 5 | F-99 |
| 2SC 489 | " | " | | | 3A | 16W (Tc = 25°C) | 150 | 3mA | 50 | | | | 5 | -0.5A | 80 | 10* | 130 | 5 | F-99 |
| 2SC 490 | " | " | 60 | 5 | 3A | 16W (Tc = 25°C) | 150 | 3mA | 50 | | | | 5 | -0.5 | 80 | 10* | 130 | 5 | F-99 |
| 2SC 491 | " | " | 50 | 5 | 1.5A | 15W (Tc = 25°C) | 150 | 10 | 30 | 70 | 2 | 0.5A | 2 | —0.5A | 70 | 40* | 40 | 25 | F-99 |
| 2SC 492 | " | " | | | 5A | 50W (Tc = 25°C) | 150 | 10mA | 50 | | | | 5 | —1A | 60 | 20* | 80 | 15 | F-102 |
| 2SC 493 | " | " | 80 | 5 | 5A | 50W (Tc = 25°C) | 150 | 10mA | 50 | | | | 5 | —1A | 60 | 20* | 80 | 15 | F-102 |
| 2SC 494 | " | " | 50 | 5 | 5A | 50W (Tc = 25°C) | 150 | 10mA | 50 | | | | 5 | —1A | 60 | 20* | 80 | 15 | F-102 |
| 2SC 495 | " | Si.E | 70 | 5 | 800 | 600 | 125 | 1 | 30 | 40-240 | 2 | 50 | 10 | —10 | | 100* | 10 | 10 | F-164 |
| 2SC 496 | " | " | 40 | 5 | 800 | 600 | 125 | 1 | 30 | 40-240 | 2 | 50 | 10 | —10 | | 100* | 10 | 10 | F-164 |
| 2SC 497 | " | " | 100 | 5 | 800 | 600 | 150 | 1 | 30 | 40-240 | 2 | 200 | 10 | —10 | | 80* | 15 | 10 | F-84B |
| 2SC 498 | " | " | 80 | 5 | 800 | 600 | 150 | 1 | 30 | 40-240 | 2 | 200 | 10 | —10 | | 80* | 15 | 10 | F-84B |
| 2SC 499 | " | Si.EP | 100 | 2 | 20 | 300 | 125 | 1 | 18 | | | | 12 | —2 | 80 | 150* | 2 | 40 | F-33 |
| 2SC 500 | RF | Si.TMe | 120 | 5 | 20 | 600 | 150 | 1 | 30 | | | | 30 | —3 | 140 | 175* | 2 | 40 | F-84A |
| 2SC 501 | " | Si.EP | 60 | 5 | 300 | 750 | 175 | 0.1 | 30 | | | | 10 | —10 | 80 | 200* | 4 | 40 | F-84B |
| 2SC 502 | PA | " | 60 | 5 | 1A | 10W (Tc = 25°C) | 150 | 10 | 30 | 30 | 5 | 200 | 5 | —200 | 30 | | | | F-84C |
| 2SC 503 | RF.SW | Si.E | 60 | 5 | 600 | 800 | 175 | 0.5 | 30 | 30-300 | 2 | 150 | 10 | —10 | | 150* | 13 | 8 | F-84B |
| 2SC 504 | " | " | 40 | 5 | 600 | 800 | 175 | 0.5 | 30 | 30-300 | 2 | 150 | 10 | —10 | | 150* | 13 | 8 | F-84B |
| 2SC 505 | " | Si.T | 300 | 3 | 100 | 600 | 175 | 1 | 100 | 40-140 | 2 | 50 | 10 | —10 | | 60* | 7 | <20 | F-84B |
| 2SC 506 | " | " | 200 | 3 | 100 | 600 | 175 | 1 | 100 | 40-140 | 2 | 50 | 10 | —10 | | 60* | 7 | <20 | F-84B |
| 2SC 507 | " | " | 170 | 5 | 100 | 750 | 175 | 0.5 | 100 | 70 | 5 | 10 | 20 | —10 | | 250* | 2.8 | 50* | F-84B |
| 2SC 508 | PA | Si.TMe | 180 | 5 | 4A | 20W (Tc = 25°C) | 150 | 120 | 50 | 40 | 5 | 4A | 5 | —500 | | 25 | 50 | 12 | F-99 |
| 2SC 509 | RF.PA | SI.E | 35 | 5 | 500 | 600 | 150 | 0.1 | 20 | 100 | 2 | 50 | 10 | —10 | | 100* | 10 | 10 | F-131 |
| 2SC 510 | PA | Si.T | 140 | 5 | 1.5A | 800 | 175 | 1 | 30 | 30-150 | 2 | 200 | 10 | —30 | | 60* | 25 | 10 | F-84B |
| 2SC 511 | " | " | 120 | 5 | 1A | 800 | 150 | 3 | 30 | | | | 10 | —50 | | 50* | 30 | 10 | F-84B |
| 2SC 512 | PA | Si.T | 100 | 5 | 1.5A | 800 | 175 | 1 | 30 | 30-150 | 2 | 200 | 10 | —30 | | 60* | 25 | 10 | F-84B |
| 2SC 513 | " | " | 70 | 5 | 1A | 800 | 150 | 3 | 30 | | | | 10 | —50 | 50 | 50* | 30 | 10 | F-84A |
| 2SC 514 | " | Si.TMe | 300 | 3 | 100 | 4W (Tc = 25°C) | 150 | 0.1 | 300 | | | | 10 | —50 | 60 | 20* | 7 | 30 | F-98 |
| 2SC 515 | " | " | 300 | 3 | 100 | 6W (Tc = 25°C) | 150 | 100 | 300 | | | | 10 | —50 | 60 | 20* | 7 | 30 | F-99 |
| 2SC 516 | RF.PA | Si.DB | 100 | 5 | 1.5A | 800 | 175 | 0.5 | 30 | 60 | 2 | 200 | 5 | —200 | 60 | 50* | 25 | 10 | F-84B |
| 2SC 516A | " | " | 140 | 5 | 1.5A | 0.5 | 30 | 60 | 2 | 200 | 5 | —200 | 60 | 50 | 25 | 10 | | | F-84B |
| 2SC 517 | PA | Si.EP | 60 | 4 | 2A | 10W (Tc = 25°C) | 175 | 10 | 30 | 10-140 | 5 | 500 | 10 | —200 | | 300* | 25 | 10 | F-97B |
| 2SC 518 | " | Si.TMe | 140 | 5 | 5A | 50W (Tc = 25°C) | 150 | 10mA | 50 | 40 | 5 | 5A | 5 | —5A | 40 | | 70 | 10 | F-102 |
| 2SC 518A | " | " | 180 | 5 | 5A | 50W (Tc = 25°C) | 150 | 1mA | 50 | 40 | 5 | 5A | 5 | —5A | 40 | | 70 | 10 | F-102 |
| 2SC 519 | " | " | 110 | 5 | 7A | 50W (Tc = 25°C) | 150 | 10mA | 50 | 50 | 5 | 1A | 5 | —0.5A | 50 | 20* | 150 | 15 | F-102 |
| 2SC 519A | " | " | 130 | 5 | 7A | 50W (Tc = 25°C) | 150 | 100 | 50 | 30-300 | 5 | 1A | 10 | —1A | | 20* | 150 | 15 | F-102 |
| 2SC 520 | " | " | 80 | 5 | 7A | 50W (Tc = 25°C) | 150 | 10mA | 50 | 50 | 5 | 1A | 5 | —0.5A | 50 | 20* | 150 | 15 | F-102 |
| 2SC 520A | " | " | 100 | 5 | 7A | 50W (Tc = 25°C) | 150 | 100 | 50 | 30-300 | 5 | 1A | 10 | —1A | | 20* | 50 | 15 | F-102 |
| 2SC 521 | " | " | 50 | 5 | 7A | 50W (Tc = 25°C) | 150 | 10mA | 50 | 50 | 5 | 1A | 5 | —0.5A | 50 | 20* | 150 | 15 | F-102 |
| 2SC 521A | " | " | 70 | 5 | 7A | 50W (Tc = 25°C) | 150 | 100 | 50 | 30-300 | 5 | 1A | 10 | —1A | | 20* | 150 | 15 | F-102 |
| 2SC 522 | " | Si.T | 400 | 5 | 1.5A | 10W (Tc = 25°C) | 175 | 1 | 30 | 30-150 | 2 | 200 | 10 | —30 | | 60* | 25 | 10 | F-97B |
| 2SC 523 | " | " | 120 | 5 | 1.5A | 10W (Tc = 25°C) | 175 | 3 | 30 | | | | 10 | —50 | 50 | 50* | 25 | 10 | F-97B |
| 2SC 524 | " | " | 100 | 5 | 1.5A | 10W (Tc = 25°C) | 175 | 1 | 30 | 30-150 | 2 | 200 | 10 | —30 | | 60* | 25 | 10 | F-97B |
| 2SC 525 | " | " | 70 | 5 | 1.5A | 10W (Tc = 25°C) | 150 | 3 | 30 | | | | 10 | —50 | 50 | 50* | 35 | 10 | F-97B |
| 2SC 526 | " | Si.TMe | 165 | 5 | 55 | 2.3W (Tc = 25°C) | 175 | 2 | 12 | | | | 20 | —45 | 20 | 250* | 2.5 | $Ccrbb'$ 25pS | F-84A |
| 2SC 527 | RF | Si.P | 35 | 3 | 10 | 130 | 175 | 1 | 10 | | | | 10 | —2.5 | 50 | 340* | 1 | 20 | F-50C |
| 2SC 528 | RF.PA | Si.EP | 20 | 5 | 150 | 200 | 125 | 0.5 | 20 | 100 | 1 | 150 | 6 | —1 | 70 | 100* | 12 | 35 | F-37 |
| 2SC 529 | RF.AF | Si.P | 30 | 5 | 100 | 100 | 125 | 0.5 | 18 | 160 | 12 | 2 | 12 | —2 | 160 | 230* | 1.8 | 100 | F-36 |
| 2SC 530 | RF.Conv.Mix Osc | " | 30 | 5 | 100 | 100 | 125 | 0.5 | 18 | | | | 12 | —2 | 150 | 230* | 1.8 | 100 | F-36 |
| 2SC 531 | " | " | 30 | 5 | 100 | 100 | 125 | 0.5 | 18 | | | | 12 | —2 | 40 | 230* | 1.8 | 40 | F-36 |
| 2SC 532 | " | " | 30 | 5 | 100 | 100 | 125 | 0.5 | 18 | | | | 12 | —2 | 110 | 230* | 1.8 | 100 | F-36 |
| 2SC 533 | " | " | 30 | 5 | 100 | 100 | 125 | 0.5 | 18 | | | | 12 | —2 | 85 | 230* | 1.8 | 40 | F-36 |
| 2SC 534 | " | " | 30 | 5 | 100 | 100 | 125 | 0.5 | 18 | | | | 12 | —2 | 85 | 230* | 1.8 | 40 | F-36 |
| 2SC 535 | " | Si.Ep | 30 | 4 | 20 | 100 | 125 | 0.5 | 10 | 80 | 6 | 1 | 6 | —1 | 70 | 700* | 0.9 | $Ccrbb'$ 5pS | F-37 |
| 2SC 536 | " | Si.P | 40 | 5 | 100 | 200 | 125 | 1 | 35 | 120 | 6 | 1 | 6 | —1 | | 180* | 3 | $Ccrbb$ 250pS | F-27 |

**Pin Configurations are 1. Emitter, 2. Base, 3. Collector, 4. Shield, unless otherwise specified. (Outline Dimensions: mm)**

| TYPE NO. | USES | MATERIAL STRUCTURE | $V_{CBO}$ (V) | $V_{EBO}$ (V) | $I_C$ (mA) | Pd (mW) | Tj (°C) | $I_{CBO}$ (uA) | VALUE OF DC/PULSE | | | | BIAS | | hfe hfb* | fab fT (Mc) | Cob (pF) | $r_{bb'}$ $h_{ie(real)}$* (Ω) | CASE STYLE |
|---|---|---|---|---|---|---|---|---|---|---|---|---|---|---|---|---|---|---|---|
| | | | | | | | | | $V_{CB}$(V) | hFE | $V_{CE}$(V) | $I_C$(mA) | $V_{CB}$(V) | $I_e$(mA) | | | | | |
| 2SC 537 | RF.Conv.Mix Osc. | Si.P | 20 | 5 | 100 | 200 | 125 | 1 | 15 | 120 | 6 | 1 | 6 | −1 | 80 | 180* | 3 | $Ccrbb'$ 250pS | F-27 |
| 2SC 538 | RF.AF | Si.EP | 25 | 5 | 50 | 300 | 175 | 1 | 10 | 250 | 5 | 2 | 5 | −2 | 250 | 150* | 4.5 | 70 | F-49C |
| 2SC 538A | " | " | 45 | 5 | 50 | 300 | 175 | 1 | 10 | 250 | 5 | 2 | 5 | −2 | 250 | 150* | 4.5 | 70 | F-49C |
| 2Sc 539 | RF | " | 25 | 5 | 50 | 30 | 175 | 1 | 10 | 250 | 5 | 2 | 5 | −2 | 250 | 80* | 4.5 | 70 | F-49C |
| 2Sc 540 | RF.AF.LN | " | 30 | 5 | 100 | 150 | 150 | 0.1 | 25 | 270 | 3 | 0.5 | 3 | −0.5 | 300 | 100 | 8 | 30 | F-23 |
| 2SC 541 | PA | " | 50 | 4 | 1A | 7W (Tc = 25°C) | 200 | 5 | 30 | 30 | 4 | 100 | 4 | −100 | 30 | 400* | 7 | 12* | F-84B |
| 2SC 542 | " | " | 65 | 4 | 1.5A | 11.6W (Tc = 25°C) | 200 | 5 | 30 | 25 | 4 | 500 | 4 | −150 | 30 | 400* | 7 | 10* | F-111 |
| 2SC 543 | " | " | 65 | 4 | 3A | 23W (Tc = 25°C) | 200 | 12 | 30 | 20 | 4 | 1A | 4 | −200 | 30 | 300* | 14 | 7* | F-111 |
| 2SC 544 | RF.Conv.Mix Osc. | " | 40 | 4 | 30 | 120 | 125 | 1 | 30 | 60 | 6 | 1 | 6 | −1 | | 350* | 1.4 | $Ccrbb'$ 40pS | F-27 |
| 2SC 545 | " | " | 20 | 4 | 30 | 120 | 125 | 1 | 15 | 60 | 6 | 1 | 6 | −1 | | 350* | 1.4 | $Ccrbb'$ 40pS | F-27 |
| 2SC 546 | " | " | 30 | ? | 30 | 150 | 125 | 1 | 30 | | | | 10 | −2 | 80 | 600* | 1 | $Ccrbb'$ 9 pS | F-27 |
| 2SC 547 | PA | " | 65 | 4 | 1A | 6W (Tc = 25°C) | 175 | 100 | 30 | >10 | 3 | 150 | 28 | −100 | | 500* | <10 | 12 | F-84B |
| 2SC 548 | RF.PA | " | 36 | 4 | 500 | 6W (Tc = 25°C) | 175 | 100 | 15 | | | | 13.5 | −100 | 30 | 550* | 13 | 10* | F-84B |
| 2SC 549 | PA | " | 65 | 4 | 1.5A | 10W (Tc = 25°C) | 175 | 100 | 30 | >10 | 3 | 150 | 28 | −150 | 30 | 500* | <10 | 7 | F-111 |
| 2SC 550 | " | " | 36 | 4 | 1.5A | 10W (Tc = 25°C) | 175 | 100 | 15 | | | | 13.5 | −150 | 30 | 400* | 18 | 7* | F-111 |
| 2SC 551 | " | " | 65 | 4 | 3A | 20W (Tc = 25°C) | 175 | 250 | 30 | >10 | 3 | 300 | 15 | −150 | | 400* | <20 | 6.5* | F-111 |
| 2SC 552 | " | " | 36 | 4 | 3A | 20W (Tc = 25°C) | 175 | 250 | 15 | | | | 13.5 | −300 | 30 | 350* | 40 | 5* | F-111 |
| 2SC 553 | " | " | 55 | 4 | 3A | 20W (Tc = 25°C) | 175 | 250 | 30 | | | | 28 | −200 | 30 | 400* | 15 | 6.5* | F-111 |
| 2SC 554 | " | " | 36 | 4 | 500 | 6W (Tc = 25°C) | 175 | 100 | 15 | | | | 13.5 | −100 | 30 | 400* | 17 | 10* | F-84B |
| 2SC 555 | " | " | 55 | 3.5 | 400 | 4.2W (Tc = 25°C) | 175 | 20 | 28 | | | | 15 | −25 | | 800* | 3 | 25* | F-84B |
| 2SC 556 | RF.PA | " | 40 | 2 | 400 | 750 | 150 | 25 | 20 | | | | 15 | −50 | 45 | 850* | 2.8 | 100* | F-84B |
| 2SC 557 | PA | " | 4o | 3.5 | 2A | 20W (Tc = 25°C) | 175 | 20 | 15 | 50 | 2 | 400 | 10 | −200 | | 350* | 25 | 10* | F-111 |
| 2SC 558 | " | Si.TMe | 250 | 5 | 5A | 50W (Tc = 25°C) | 150 | 1mA | 50 | 40 | 5 | 5A | 5 | −5A | | 20 | 70 | 10 | F-102 |
| 2SC 559 | " | S.EP | 60 | 5 | 300 | 600 | 175 | 10 | 30 | 80 | 1 | 100 | 10 | −10 | | | 3.2 | 10 | F-84B |
| 2SC 560 | RF | Si.EP | 80 | 5 | 800 | 800 | 175 | 0.5 | 30 | 30-120 | 2 | 150 | 10 | −50 | 70 | 150* | 11 | 15 | F-84B |
| 2SC 561 | RF.Conv.Mix Osc | Si.P | 20 | 2 | 25 | 200 | 125 | 2 | 12 | | | | 6 | −2 | 35 | 200* | 2 | 60* | F-30 |
| 2SC 562 | RF | " | 40 | 4 | 25 | 130 | 175 | 1 | 10 | >26 | 10 | 4 | 10 | −4 | 80 | 330* | Cre 0.15pF | $Ccrbb'$ 45pS | F-117C |
| 2SC 563 | " | Si.EP | 40 | 4 | 25 | 145 | 175 | 1 | 10 | >38 | 10 | 7 | 10 | −5 | 130 | 550* | Cre 0.23pF | $Ccrbb'$ 80pS | F-117C |
| 2SC 564 | SW | " | 50 | 5 | 500 | 650 | 175 | 1 | 10 | 50 | 1 | 150 | | | | | | | F-84B |
| 2SC 565 | " | " | 50 | 5 | 200 | 350 | 175 | 1 | 10 | 45 | 1 | 10 | | | | | | | F-49C |
| 2SC 566 | RF.PA | Si.EP | 50 | 4 | 300 | 800 | 175 | 0.2 | 35 | 70 | 10 | 100 | 10 | −30 | | 700* | 4 | | F-85A |
| 2SC 567 | RF.Conv.Mix Osc. | " | 30 | 3 | 20 | 200 | 150 | 0.5 | 15 | | | | 6 | −2 | 80 | 1300* | 0.65 | $Ccrbb'$ 3 pS | F-50C |
| 2SC 568 | " | " | 30 | 3 | 20 | 200 | 150 | 0.1 | 15 | | | | 6 | −2 | 80 | 1000* | 0.65 | $Ccrbb'$ 3 pS | F-50C |
| 2SC 569 | SW | " | 40 | 4.5 | 150 | 150 | 150 | 0.5 | 20 | 60 | 1 | 10 | | | | | | | F-22 |
| 2SC 570 | " | " | 40 | 4.5 | 200 | 300 | 150 | 0.5 | 20 | 60 | 1 | 10 | | | | | | | F-28 |
| 2SC 571 | PA | " | 36 | 4 | 500 | 6W (Tc = 25°C) | 175 | 5 | 20 | 70 | 13.5 | 100 | 13.5 | −100 | 70 | 320* | 27 | 5* | F-84B |
| 2SC 572 | " | " | 36 | 4 | 1A | 10W (Tc = 25°C) | 175 | 5 | 20 | 80 | 13.5 | 200 | 13.5 | −200 | 80 | 330* | 27 | 5* | F-111 |
| 2SC 573 | " | " | 36 | 4 | 2A | 20W (Tc = 25°C) | 175 | 10 | 20 | 80 | 13.5 | 400 | 13.5 | −400 | 80 | 350* | 27 | 4.5* | F-111 |
| 2SC 574 | RF.PA | " | 80 | 4 | 1A | 7.5W (Tc = 25°C) | 175 | 0.5 | 80 | 5 | 10 | 500 | 10 | −100 | 15 | 280* | 15 | $Ccrbb'$ 20pS | F-110 |
| 2SC 575 | " | " | 80 | 4 | 1A | 5W (Tc = 25°C) | 175 | 0.5 | 40 | 20 | 5 | 500 | 10 | −100 | 20 | 210* | 7 | $Ccrbb'$ 18pS | F-84C |
| 2SC 576 | RF.SW | " | 40 | 5 | 500 | 360 | 200 | 0.1 | 20 | 40 | 1 | 10 | 6 | −2 | 60 | 650* | 2.5 | 20 | F-49C |
| 2SC 577 | " | " | 40 | 5 | 500 | 360 | 200 | 0.1 | 20 | 80 | 1 | 10 | 6 | −2 | 80 | 600* | 2.5 | 20 | F-49C |
| 2SC 578 | SW | " | 60 | 5 | 500 | 600 | 175 | 1 | 30 | 60 | 1.5 | 150 | | | | | | | F-84A |
| 2SC 579 | " | " | 30 | 5 | 200 | 360 | 175 | 0.1 | 15 | 80 | 0.4 | 50 | | | | | | | F-49C |
| 2SC 580 | RF.Conv.Mix Osc.PA | " | 60 | 5 | 1A | 800 | 175 | 1 | 40 | 60 | 10 | 150 | 10 | −50 | 80 | 250* | 10 | 20* | F-84A |
| 2SC 581 | RF.Conv. Mix.Osc | " | 30 | 5 | 30 | 140 | 175 | 1 | 10 | | | | 10 | −1 | 85 | 230* | 1.5 | 20 | F-50C |
| 2SC 582 | PA | Si.Me | 300 | 3 | 100 | 6.5W (Tc = 25°C) | 150 | 100 | 300 | 65 | 10 | 50 | 10 | −50 | 60 | 35* | 8 | 30 | F-99 |
| 2SC 583 | RF.Conv. Mix.Osc | " | 30 | 2.5 | 20 | 200 | 200 | 0.01 | 15 | 25-150 | 1 | 2 | 5 | −2 | 80 | 1300* | 1.2 | $Ccrbb'$ 8 pS | F-50C |
| 2SC 584 | RF.PA | " | 80 | 4 | 2A | 17.5W (Tc = 25°C) | 200 | 1mA | 80 | 10 | 10 | 500 | 10 | −500 | 15 | 200* | 30 | $Ccrbb'$ 20pS | F-111 |
| 2SC 585 | PA | Si.EP | 65 | 4 | 3A | 20W (Tc = 25°C) | 175 | 12 | 30 | 80 | 28 | 200 | 28 | −200 | 30 | 350* | 14 | 6.5* | F-111 |
| 2SC 586 | " | Si.EMe | 150 | 6 | 5A | 50W (Tc = 25°C) | 150 | 15mA | 150 | 30 | 4 | 5A | 4 | −5A | 20 | 55* | 130 | 8 | F-102 |
| 2SC 587 | RF | Si.P | 45 | 5 | 30 | 300 | 175 | 0.01 | 10 | | | | 10 | −2 | 300 | 80* | 3 | 80 | F-49C |
| 2SC 587A | " | " | 45 | 5 | 30 | 300 | 175 | 0.01 | 10 | | | | 10 | −2 | 300 | 80* | 3 | 80 | F-49C |
| 2SC 588 | " | Si.DB | 30 | 5 | 100 | 600 | 175 | 1 | 15 | | | | 10 | −10 | 100 | 200* | 2.5 | 50 | F-84B |
| 2SC 589 | " | " | 165 | 5 | 80 | 750 | 175 | 2 | 25 | 40 | 5 | 3 | 20 | −3 | 40 | 200* | 2 | $Ccrbb'$ 35pS | F-84B |
| 2SC 590 | " | " | 120 | 5 | 300 | 800 | 175 | 1 | 60 | 70 | 10 | 150 | 10 | −50 | 70 | 150* | 12 | 30* | F-84B |
| 2SC 591 | RF.PA | " | 100 | 4 | 1.5A | 20W (Tc = 25°C) | 175 | 1mA | 30 | 10-40 | 10 | 150 | 10 | −150 | 20 | 150* | 35 | 25* | F-83 |
| 2SC 592 | PA | Si.TP | 75 | 4 | 2.5A | 13W (Tc = 25°C) | 175 | 1 | 30 | 60 | 4 | 0.5A | 28 | −100 | 60 | 180* | 20 | 10* | F-111 |
| 2SC 593 | RF.Conv. Mix.Osc | Si.EP | 50 | 5 | 30 | 165 | 175 | 1 | 10 | 40-160 | 10 | 1 | 10 | −1 | 100 | 230* | 1.5 | 18 | F-50C |
| 2SC 594 | RF.PA | " | 60 | 5 | 200 | 750 | 175 | 0.1 | 45 | 40-240 | 1 | 10 | 10 | −10 | | 400* | 3 | 120* | F-84B |

**Pin Configurations are 1. Emitter, 2. Base, 3. Collector, 4. Shield, unless otherwise specified. (Outline Dimensions: mm)**

| TYPE NO. | USES | MATERIAL STRUCTURE | $V_{CBO}$ (V) | $V_{EBO}$ (V) | $I_C$ (mA) | Pd (mW) | Tj (°C) | $I_{CBO}$ (uA) | VALUE OF DC/PULSE | | | | BIAS | | hfe hfb* | fab fT (Mc) | Cob (pF) | $r_{bb'}$ $h_{ie(real)}$* (Ω) | CASE STYLE |
|---|---|---|---|---|---|---|---|---|---|---|---|---|---|---|---|---|---|---|---|
| | | | | | | | | | $V_{CB}$(V) | hFE | $V_{CE}$(V) | $I_C$(mA) | $V_{CB}$(V) | $I_E$(mA) | | | | | |
| 2SC 595 | SW | Si.EP | 30 | 5 | 200 | 300 | 150 | 1 | 15 | 60 | 1 | 10 | 10 | −10 | 60 | 450* | 4 | 40* | F-49C |
| 2SC 596 | RF.PA | " | 60 | 5 | 500 | 800 | 175 | 0.5 | 20 | 25-100 | 10 | 30 | 10 | −30 | 50 | 400* | 6 | 40* | F-85B |
| 2SC 597 | PA | " | 65 | 4 | 1A | 6W (Tc = 25°C) | 175 | 5 | 30 | | | | 28 | −100 | 30 | 400* | 7 | 12* | F-84B |
| 2SC 598 | " | " | 65 | 4 | 1.5A | 10W (Tc = 25°C) | 175 | 5 | 30 | | | | 28 | −100 | 30 | 400* | 7 | 12* | F-111 |
| 2SC 599 | " | " | 60 | 4 | 1.5A | 20W (Tc = 25°C) | 200 | 500 | 28 | 30 | 28 | 50 | 28 | −50 | 50 | 500* | 25 | 7* | F-114 |
| 2SC 600 | " | " | 65 | 4 | 3A | 20W (Tc = 25°C) | 175 | 12 | 30 | | | | 28 | −200 | 30 | 400* | 14 | 7.5* | F-111 |
| 2SC 601 | RF.SW | " | 40 | 5 | 100 | 300 | 175 | 0.1 | 20 | 60 | 1 | 10 | 10 | −10 | 80 | 580* | 2.4 | 20 | F-49C |
| 2SC 602 | RF | " | 30 | 3 | 30 | 200 | 150 | 1 | 15 | | | | 6 | −5 | 60 | 800* | 1.3 | 70* | F-50C |
| 2SC 603 | Ch | " | 7 | 7 | 50 | 200 | 150 | 1 | 6 | 100 | 0.5 | 0.1 | | | | 70* | 5.5 | $C_{rbb'}$ 2nS | F-47 |
| 2SC 604 | | | | | | | | | | | | | | | | | | | |
| 2SC 605 | RF.Conv.Mix Osc. | Si.P | 30 | 4 | 20 | 150 | 150 | 0.2 | 20 | | | | 10 | −2 | 70 | 480* | 0.5 | $C_{rbb'}$ 2pS | F-23 |
| 2SC 606 | " | " | 30 | 4 | 20 | 150 | 150 | 0.2 | 20 | | | | 10 | −2 | 70 | 530* | 0.5 | $C_{rbb'}$ 1.6pS | F-23 |
| 2SC 607 | PA | Si.T | 75 | 4 | 600 | 1W | 175 | 5 | 40 | | | | 10 | −50 | 50 | 70* | 25 | 20* | F-84A |
| 2SC 608 | " | " | 75 | 4 | 1.5A | 10W (Tc = 25°C) | 175 | 5 | 40 | | | | 10 | −50 | 60 | 70* | 25 | 20* | F-97B |
| 2SC 609 | " | " | 75 | 4 | 1.5A | 10W (Tc = 25°C) | 175 | 5 | 40 | | | | 10 | −50 | 60 | 80* | 25 | 25* | F-97B |
| 2SC 610 | " | Si.Tp | 100 | 4 | 10A | 100W (Tc = 25°C) | 175 | 10mA | 40 | 50 | 1 | 1A | | | | | | | F-109 |
| 2SC 611 | RF.Conv. Mix.Osc | Si.EP | 20 | 3 | 20 | 200 | 150 | 1 | 10 | | | | 10 | −2 | 80 | 1000* | 1 | $C_{rbb'}$ 3pS | F-50C |
| 2SC 612 | RF | " | 35 | 2 | 20 | 180 | 175 | 1 | 10 | | | | 10 | −2 | 80 | 1300* | 1 | $r_{b'b}$30 | F-50C |
| 2SC 613 | SW | " | 40 | 5 | 200 | 360 | 200 | 0.1 | 20 | 80 | 1 | 10 | | | | | | | F-49C |
| 2SC 614 | Osc.PA | Si.P | 80 | 4 | 1.5A | 7.5W (Tc = 25°C) | 175 | 1 | 40 | 80 | 10 | 250 | 10 | −250 | | 200* | 12.5 | 8 | F-84B |
| 2SC 615 | " | " | 30 | 4 | 1.5A | 7.5W (Tc = 25°C) | 175 | 1 | 10 | 80 | 10 | 250 | 10 | −250 | | 200* | 12.5 | 8 | F-84B |
| 2SC 616 | " | " | 80 | | 1.5A | 13W (Tc = 25°C) | 175 | 1 | 40 | | | | 10 | −250 | 80 | 200* | 12.5 | 8 | F-83 |
| 2SC 617 | " | " | 30 | | 1.5A | 13W (Tc = 25°C) | 175 | 1 | 10 | | | | 10 | −250 | 80 | 200* | 12.5 | 8 | F-83 |
| 2SC 618 | RF | Si.EP | 25 | 4 | 25 | 150 | 150 | 0.1 | 12 | | | | 6 | −2 | 50 | 800* | 1.3 | 60* | F-50C |
| 2SC 618A | " | " | 25 | 4 | 25 | 150 | 150 | 0.1 | 12 | | | | 6 | −2 | 50 | 800* | 1.3 | 60* | F-50C |
| 2SC 619 | SW.PA | Si.EP | 30 | 5 | 200 | 250 | 125 | 1 | 25 | 110 | 6 | 10 | | | | | | | F-40 |
| 2SC 620 | RF.PA | " | 50 | 5 | 200 | 250 | 125 | 1 | 25 | 90 | 6 | 10 | 6 | −1 | 80 | 250 | 7 | $C_{rbb'}$ 100pS | F-40 |
| 2SC 621 | RF.Conv.Mix Osc.SW | " | 25 | 4 | 100 | 150 | 150 | 1 | 25 | 75 | 6 | 10 | 6 | −1 | 80 | 150* | 2.5 | $C_{rbb'}$ 100pS | F-8A |
| 2SC 622 | RF.Conv.Mix Osc | " | 25 | 4 | 100 | 150 | 150 | 1 | 25 | 75 | 6 | 10 | 6 | −1 | 80 | 150* | 2.5 | $C_{rbb'}$ 100pS | F-11A |
| 2SC 623 | SW | " | 40 | 4.5 | 150 | 150 | 150 | 0.5 | 20 | 60 | 1 | 10 | | | | | | | F-22 |
| 2SC 624 | SW | Si.EP | 40 | 4.5 | 200 | 300 | 150 | 0.5 | 20 | 60 | 1 | 10 | | | | | | | F-28 |
| 2SC 625 | | | | | | | | | | | | | | | | | | | |
| 2SC 626 | RF.Conv.Mix Osc.PA | Si.EP | 50 | 5 | 200 | 750 | 175 | 0.1 | 20 | | | | 10 | −10 | 130 | 350* | 4 | 45* | F-84A |
| 2SC 627 | RF.AF.SW | Si.T | 200 | 4 | 100 | 700 | 175 | 5 | 100 | 80 | 10 | 50 | 6 | −2 | 50 | 20* | 6 | 25 | F-84B |
| 2SC 628 | RF.EP | Si.EP | 40 | 4 | 500 | 2.5W (Tc = 25°C) | 175 | 0.4 | 20 | 40 | 10 | 100 | 10 | −30 | 40 | 700* | 5.5 | 40* | F-84A |
| 2SC 629 | RF.Conv. Mix.Osc | Si.DB | 18 | | 30 | 150 | 120 | 0.2 | 15 | 30 | 3 | 1 | 6 | −1 | 36 | 800* | 1.3 | $C_{rbb'}$ 15pS | F-38 |
| 2SC 630 | | | | | | | | | | | | | | | | | | | |
| 2SC 631 | RF.LN | Si.E | 25 | | 100 | 180 | 120 | 0.2 | 25 | 350 | 3 | 1 | 6 | −0.1 | 170 | 140* | 4.5 | $C_{rbb'}$ 350pS | F-38 |
| 2SC 632 | " | " | 40 | | 100 | 180 | 120 | 0.2 | 25 | 350 | 3 | 1 | 6 | −0.1 | 170 | 140* | 4.5 | $C_{rbb'}$ 350pS | F-38 |
| 2SC 633 | RF.Conv.Mix Osc.SW | " | 25 | 6 | 100 | 180 | 120 | 0.2 | 25 | 90 | 3 | 1 | 6 | −1 | 110 | | 4.5 | $C_{rbb'}$ 350pS | F-38 |
| 2SC 634 | " | " | 40 | 6 | 100 | 180 | 120 | 0.2 | 25 | 90 | 3 | 1 | 6 | −1 | 110 | 140* | 4.5 | $C_{rbb'}$ 350pS | F-38 |
| 2SC 635 | PA | Si.EP | 65 | | 1.5A | 10W (Tc = 25°C) | 175 | 3 | 18 | | | | 10 | −150 | 50 | 450* | 10 | 10* | F-111 |
| 2SC 636 | " | " | 65 | 4 | 3A | 20W (Tc = 25°C) | 175 | 10 | 18 | | | | 18 | −150 | 50 | 350* | 16 | 8* | F-111 |
| 2SC 637 | " | " | 40 | 4 | 1A | 10W (Tc = 25°C) | 175 | 10 | 20 | | | | 10 | −100 | 50 | 450* | 16 | 10* | F-111 |
| 2SC 638 | " | " | 40 | 4 | 2A | 20W (Tc = 25°C) | 175 | 20 | 20 | | | | 13.5 | −200 | 50 | 300* | 28 | 8* | F-111 |
| 2SC 639 | SW | " | 40 | 5 | 200 | 360 | 200 | 0.1 | 20 | 100 | 1 | 10 | | | | | | | F-49C |
| 2SC 640 | RF | " | 30 | 5 | 100 | 150 | 150 | 0.1 | 25 | 270 | 3 | 0.5 | 3 | −0.5 | 300 | 100* | 8 | 30* | F-23 |
| 2SC 641 | SW | " | 40 | 5 | 100 | 100 | 125 | 0.25 | 20 | 85 | 1 | 10 | | | | | | | F-36 |
| 2SC 642 | PA | Si.TMe | 1100 | 5 | 1A | 50W (Tc = 25°C) | 150 | 10 | 500 | 30-160 | 15 | 150 | 15 | −200 | | >0.5 | 70 | 10 | F-102 |
| 2SC 643 | " | " | 1100 | 5 | 2.5A | 50W (Tc = 25°C) | 150 | 10 | 500 | >7 | 15 | 2A | 15 | −200 | | > 2 | 80 | 10 | F-102 |
| 2SC 644 | RF.AF.LN | Si.EP | 30 | 5 | 50 | 150 | 125 | 1 | 10 | 250 | 5 | 2 | 5 | −2 | 200 | 160* | 2.3 | $C_{rbb'}$ 110pS | F-138 |
| 2SC 645 | RF.Conv.Mix Osc | " | 30 | 5 | 30 | 140 | 175 | 1 | 10 | 40-150 | 10 | 1 | 10 | −1 | 100 | 200* | Cre 0.65 | 22 | F-54 |
| 2SC 646 | PA | Si.TMe | 60 | 5 | 4A | 25W (Tc = 25°C) | 150 | 10mA | 60 | 55 | 4 | 2.5A | 4 | −100 | 70 | 50* | 110 | 12 | F-102 |
| 2SC 647 | " | " | 80 | 5 | 5A | 50W (Tc = 70°C) | 150 | 10mA | 80 | 40 | 4 | 4A | 10 | 500 | | 43* | 160 | 7 | F-102 |
| 2SC 648 | RF | Si.E | 30 | | 30 | 100 | 150 | 0.1 | 20 | 280 | 6 | 0.1 | 5 | −0.1 | 320 | 350* | 1.7 | 80* | F-182C |
| 2SC 649 | RF.AF.LN | Si.E | 30 | 6 | 30 | 200 | 175 | 0.1 | 20 | 120 | 6 | 0.1 | 5 | −0.1 | 150 | 220* | 2.7 | 85 | F-12A |
| 2SC 650 | " | " | 30 | 6 | 30 | 200 | 175 | 0.1 | 20 | 250 | 6 | 0.1 | 5 | −0.1 | 300 | 220* | 2.7 | 75 | F-12A |
| 2SC 651 | PA | Si.EP | 45 | 4 | 300 | 750 | 150 | 0.1 | 20 | | | | 10 | −30 | 80 | 110* | 2.4 | 27* | F-84A |
| 2SC 652 | " | " | 40 | 3 | 300 | 750 | 150 | 0.2 | 20 | | | | 10 | −20 | 80 | 1100* | 2.4 | 27* | F-84A |
| 2SC 653 | RF | " | 25 | 3 | 20 | 200 | 150 | 0.1 | 12 | | | | 6 | −2 | 120 | 1400* | 0.6 | 60* | F-50C |

**Pin Configurations are 1. Emitter, 2. Base, 3. Collector, 4. Shield, unless otherwise specified. (Outline Dimensions: mm)**

| TYPE NO. | USES | MATERIAL STRUCTURE | $V_{CBO}$ (V) | $V_{EBO}$ (V) | $I_C$ (mA) | $P_d$ (mW) | $T_j$ (°C) | $I_{CBO}$ (uA) | VALUE OF DC/PULSE BIAS $V_{CB}$(V) | $h_{FE}$ | $V_{CE}$(V) | $I_C$(mA) | BIAS $V_{CB}$(V) | BIAS $I_E$(mA) | hfe hfb* | fab fT (Mc) | Cob (pF) | $r_{bb'}$ $h_{ie}$(real)* (Ω) | CASE STYLE |
|---|---|---|---|---|---|---|---|---|---|---|---|---|---|---|---|---|---|---|---|
| 2SC 654 | RF | Si.EP | 40 | 3 | 300 | 800 | 150 | 1 | 35 | | | | 15 | −50 | 80 | 650 | 2.9 | 21* | F-85A |
| 2SC 655 | RF.AF.PA | " | 10 | 2 | 10 | 75 | 125 | 1 | 10 | 400 | 5 | 2 | 5 | −2 | 250 | 80* | 4.5 | 70 | F-34 |
| 2SC 656 | RF | " | 10 | 2 | 5 | 50 | 125 | 1 | 10 | | | | 10 | −5 | 130 | 550* | 1.5 | $C_{rbb'}$ 80pS | F-34 |
| 2SC 657 | RF.Conv.Mix Osc | Si.DB | 18 | | 30 | 150 | 120 | 0.2 | 15 | 50 | 10 | 4 | 6 | −1 | 50 | 500* | 1.1 | $C_{rbb'}$ 15pS | F-38 |
| 2SC 658 | " | " | 25 | 4 | 20 | 150 | 150 | 1 | 12 | 60 | 6 | 1 | 6 | −1 | 60 | 550* | 1.5 | $C_{rbb'}$ 30pS | F-8A |
| 2SC 659 | " | " | 25 | 4 | 20 | 150 | 150 | 1 | 12 | 60 | 6 | 1 | 6 | −1 | 60 | 400* | 1.5 | $C_{rbb'}$ 40pS | F-8A |
| 2SC 660 | RF.Conv Mix | Si.P | 25 | 4 | 20 | 150 | 150 | 0.5 | 20 | 60 | 10 | 3 | 10 | −3 | 60 | 600* | 1 | $C_{rbb'}$ 3pS | F-11A |
| 2SC 661 | " | " | 25 | 4 | 20 | 150 | 150 | 0.5 | 20 | 60 | 10 | 3 | 10 | −3 | 60 | 600* | 1 | $C_{rbb'}$ 4pS | F-11A |
| 2SC 662 | RF.Conv. Mix.Osc | Si.EP | 25 | 2 | 20 | 150 | 150 | 0.5 | 10 | | | | 6 | −2 | 40 | 800* | 1 | $C_{rbb'}$ 4pS | F-9 |
| 2SC 663 | " | " | 25 | 2 | 20 | 150 | 150 | | | 10-300 | 10 | 10 | | | | 900* | 1.4 | $C_{rbb'}$ 5pS | F-11A |
| 2SC 664 | PA | Si.T | 100 | 5 | 5A | 50W (Tc = 25°C) | 150 | 1mA | 30 | 80 | 5 | 1A | 5 | −1A | 60 | 15* | 300 | 10 | F-103 |
| 2SC 665 | " | " | 125 | 5 | 5A | 50W (Tc = 25°C) | 150 | 1mA | 30 | 80 | 5 | 1A | 5 | −1A | 60 | 15* | 300 | 10 | F-103 |
| 2SC 666 | | | | | | | | | | | | | | | | | | | |
| 2SC 667 | | | | | | | | | | | | | | | | | | | |
| 2SC 668 | RF.Conv. Mix. | Si.TP | 15 | 3 | 30 | 120 | 125 | 1 | 10 | 60 | 6 | 1 | 6 | −1 | | 560* | 1.1 | $C_{rbb'}$ 20pS | F-27 |
| 2SC 669 | | | | | | | | | | | | | | | | | | | |
| 2SC 669A | PA | Si.EMe | 100 | 6 | 3A | 10W (Tc = 25°C) | 175 | 3 | 25 | 170-400 | 2 | 100 | 10 | −50 | 70 | 65* | 35 | | F-84A |
| 2SC 670 | | | | | | | | | | | | | | | | | | | |
| 2SC 671 | | | | | | | | | | | | | | | | | | | |
| 2SC 672 | | | | | | | | | | | | | | | | | | | |
| 2SC 673 | | | | | | | | | | | | | | | | | | | |
| 2SC 674 | RF.Conv. Mix. | Si.TP | 15 | 4 | 30 | 120 | 125 | 1 | 10 | 60 | 6 | 1 | 6 | −1 | | 560* | 1.1 | $C_{rbb'}$ 15pS | F-27 |
| 2SC 675 | SW | Si.Me | 250 | 6 | 7A | 50W (Tc = 25°C) | 180 | 10 | 30 | 30 | 10 | 0.5A | | | | | | | F-102 |
| 2SC 676 | " | " | 200 | 6 | 7A | 50W (Tc = 25°C) | 180 | 10 | 30 | 10 | 0.5A | | | | | | | | F-102 |
| 2SC 677 | " | " | 150 | 6 | 7A | 50W (Tc = 25°C) | 180 | 30 | 30 | 40 | 10 | 0.5A | | | | | | | F-102 |
| 2SC 678 | " | " | 100 | 6 | 7A | 50W (Tc = 25°C) | 180 | 100 | 30 | 40 | 10 | 0.5A | | | | | | | F-102 |
| 2SC 679 | PA | Si.T | 300 | 6 | 2A | 30W (Tc = 25°C) | 175 | 1 | 30 | 60 | 10 | 20 | 10 | −200 | 190 | 20* | 75 | 20 | F-153 |
| 2SC 680 | " | " | 200 | 6 | 2A | 12.5W (Tc = 25°C) | 150 | 1 | 30 | 180 | 10 | 200 | 10 | −200 | 190 | 20* | 75 | 20 | F-153 |
| 2SC 681 | SW | " | 200 | 5 | 6A | 50W (Tc = 25°C) | 150 | 15mA | 30 | 30 | 4 | 4A | | | | | | | F-102 |
| 2SC 682 | RF | Si.P | 20 | 3 | 20 | 180 | 175 | 0.1 | 10 | 60 | 10 | 2 | 10 | −2 | 75 | 550* | $C_{re}$ 0.37 | | F-9 |
| 2SC 683 | RF | Si.P | 20 | 3 | 20 | 180 | 175 | 0.1 | 10 | 60 | 10 | 2 | 10 | −2 | 75 | 550* | 0.37 | | F-9 |
| 2SC 684 | RF.Conv.Mix Osc | Si.EP | 30 | 2 | 50 | 200 | 125 | 0.5 | 10 | 740 | 10 | 10 | 10 | −10 | 50 | 1100* | 1.2 | $C_{rbb'}$ 10pS | F-37 |
| 2SC 685 | PA | Si.T | 300 | 3 | 100 | 6.25W (Tc = 25°C) | 150 | 100 | 300 | | | | 10 | −50 | 60 | 25* | 5 | 20 | F-153 |
| 2SC 686 | RF | Si.Ep | 150 | 6 | 50 | 800 | 175 | 0.01 | 100 | 90 | 10 | 25 | 10 | −25 | 100 | 180* | 2.6 | 10* | F-84A |
| 2SC 687 | SW | " | 150 | 6 | 5A | 50W (Tc = 25°C) | 150 | 15mA | 150 | 30 | 4 | 5A | | | | | | | F-102 |
| 2SC 688 | PA | " | 60 | 4 | 1.5A | 20W (Tc = 25°C) | 200 | 500 | 25 | | | | 10 | −100 | 30 | | 20 | | F-114 |
| 2SC 689 | SW | Si.T | 40 | 5 | 100 | 300 | 175 | 0.25 | 20 | 50 | 1 | 100 | | | | | | | F-49C |
| 2SC 690 | PA | Si.EP | 60 | 5 | 3A | 35W (Tc = 25°C) | 200 | 500 | 30 | 50 | 10 | 100 | | | | | | | F-113 |
| 2SC 691 | " | " | 60 | 4 | 500 | 10W (Tc = 25°C) | 200 | 200 | 30 | 50 | 10 | 100 | | | | | | | F-113 |
| 2SC 692 | " | " | 60 | 5 | 1A | 17.5W (Tc = 25°C) | 200 | 30 | 50 | 10 | 100 | | | | | | | | F-113 |
| 2SC 693 | RF.LN | Si.P | 40 | | 50 | 100 | 125 | 1 | 35 | 230 | 6 | 1 | 6 | −1 | | 140* | 4 | $C_{rbb'}$ 250pS | F-113 |
| 2SC 694 | " | " | 40 | | 50 | 100 | 125 | 1 | 35 | 230 | 6 | 1 | 6 | −1 | | 140* | 4 | $C_{rbb'}$ 250pS | F-27 |
| 2SC 695 | AF.RF | Si.EP | 20 | 5 | 30 | 100 | 150 | 0.1 | 15 | 150 | 3 | 0.1 | 6 | −1 | 200 | 150* | 2 | 50* | F-23 |
| 2SC 696 | PA | " | 100 | 5 | 3A | 750 | 175 | 3 | 30 | 55 | $V_{CB}$ = 2V | 100 | 2 | −100 | 80 | 100* | 20 | $C_{rbb'}$ 40pS | F-84A |
| 2SC 696A | " | " | 130 | 5 | 3A | 750 | 175 | 3 | 30 | 55 | $V_{CB}$ = 2V | 100 | 2 | −100 | 80 | 100* | 20 | $C_{rbb'}$ 40pS | F-84A |
| 2SC 697 | " | " | 100 | 5 | 3A | 10W (Tc = 25°C) | 175 | 3 | 30 | 55 | $V_{CB}$ = 2V | 100 | 2 | −100 | 80 | 100* | 22 | $C_{rbb'}$ 40pS | F-97B |
| 2SC 697A | " | " | 130 | 5 | 3A | 10W (Tc = 25°C) | 175 | 3 | 30 | 55 | $V_{CB}$ = 2V | 100 | 2 | −100 | 80 | 100* | 22 | | F-97B |
| 2SC 698 | RF.PA | " | 100 | 5 | 3A | 10W (Tc = 25°C) | 175 | 1 | 60 | 80 | 2 | 0.5A | 10 | −50 | 85 | 90* | 35 | 15* | F-97A |
| 2SC 699 | PA | Si.TP | 50 | 4 | 1A | 10W (Tc = 25°C) | 200 | 50 | 12 | | | | 12 | −100 | 30 | | 20 | | F-97A |
| 2SC 700 | " | Si.EP | 60 | 3 | 500 | 5W (Tc = 25°C) | 200 | 100 | 20 | | | | 20 | −50 | 30 | | 6 | | F-84C |
| 2SC 701 | " | " | | 3 | 750 | 5W (Tc = 25°C) | 200 | 100 | 15 | | | | 15 | −50 | 30 | | 7 | | F-84C |
| 2SC 702 | " | " | 40 | 4 | 750 | 10W (Tc = 25°C) | 200 | 100 | 15 | 50 | 10 | 100 | | | | | | | F-113 |
| 2SC 703 | " | " | 40 | 5 | 2A | 25W (Tc = 25°C) | 200 | 1mA | 15 | 50 | 10 | 100 | | | | | | | F-113 |
| 2SC 704 | " | " | 40 | 5 | 4A | 40W (Tc = 25°C) | 200 | 2mA | 15 | 50 | 10 | 100 | | | | | | | F-113 |
| 2SC 705 | RF.Conv. Mix.Osc. | " | 15 | 3 | 30 | 120 | 125 | 1 | 10 | 70 | 6 | 1 | 6 | −1 | | 700* | 1.5 | $C_{rbb'}$ 14pS | F-27 |
| 2SC 706 | RF | " | 15 | 3 | 30 | 120 | 125 | 1 | 10 | 80 | 6 | 1 | 6 | −1 | | 800* | 1.1 | $C_{rbb'}$ 17pS | F-166 |
| 2SC 707 | RF | Si.P | 20 | 3 | 20 | 150 | 175 | 0.1 | 10 | 50 | 10 | 2 | 10 | −2 | 75 | 650* | 0.4 | | F-9 |
| 2SC 708 | " | Si.T | 60 | 4 | 1A | 750 | 150 | 10 | 30 | 40 | 4 | 400 | 4 | −50 | 50 | 15* | 25 | 100 | F-84A |
| 2SC 708A | " | " | 90 | 4 | 1A | 750 | 150 | 10 | 30 | 40 | 4 | 400 | 4 | −50 | 50 | 15* | 25 | 100 | F-84A |
| 2SC 709 | RF.Conv. Mix.Osc | Si.EP | 25 | 4 | 100 | 200 | 125 | 1 | 25 | 75 | 6 | 10 | 6 | −1 | 60 | 180* | 3.5 | $C_{rbb'}$ 180pS | F-41 |

**Pin Configurations are 1. Emitter, 2. Base, 3. Collector, 4. Shield, unless otherwise specified. (Outline Dimensions: mm)**

| TYPE NO. | USES | MATERIAL STRUCTURE | $V_{CBO}$ (V) | $V_{EBO}$ (V) | $I_C$ (mA) | $P_d$ (mW) | $T_j$ (°C) | $I_{CBO}$ (uA) | VALUE OF DC/PULSE | | | | BIAS | | $h_{fe}$ $h_{fb}$* | $f_{ab}$ $f_T$ (Mc) | $C_{ob}$ (pF) | $r_{bb'}$ $h_{ie(real)}$* (Ω) | CASE STYLE |
|---|---|---|---|---|---|---|---|---|---|---|---|---|---|---|---|---|---|---|---|
| | | | | | | | | | $V_{CB}$(V) | $h_{FE}$ | $V_{CE}$(V) | $I_C$(mA) | $V_{CB}$(V) | $I_e$(mA) | | | | | |
| 2SC 710 | RF.Conv. Mix.Osc | Si.EP | 30 | 4 | 30 | 200 | 125 | 1 | 25 | 90 | 6 | 1 | 6 | −1 | | 200* | 2 | $C_{crbb'}$ 20pS | F-138B |
| 2SC 711 | RF | " | 30 | 4 | 50 | 200 | 125 | 0.1 | 25 | 250 | 6 | 1 | 6 | −1 | | 150* | 2.5 | $C_{crbb'}$ 200pS | F-138B |
| 2SC 712 | " | " | 30 | 4 | 100 | 200 | 125 | 1 | 25 | 90 | 6 | 10 | 6 | −1 | | 150* | 2.5 | $C_{crbb'}$ 150pS | F-138B |
| 2SC 712A | " | " | 30 | 4 | 100 | 200 | 125 | 1 | 25 | 75 | 6 | 10 | 6 | −1 | 80 | 180* | 2.5 | $C_{crbb'}$ 150pS | F-138B |
| 2SC 713 | SW | " | 30 | 4 | 100 | 200 | 125 | 0.1 | 25 | 90 | 6 | 10 | | | | 150* | 2.5 | | F-138B |
| 2SC 714 | " | " | 70 | 5 | 200 | 250 | 125 | 0.1 | 25 | 60 | 6 | 10 | 6 | −10 | | 200* | 7 | | F-41 |
| 2SC 715 | RF.V | " | 40 | 5 | 100 | 120 | 125 | 1 | 35 | 180 | 6 | 1 | 6 | −1 | | 140* | 4 | $C_{crbb'}$ 250pS | F-27 |
| 2SC 716 | " | " | 20 | 5 | 100 | 100 | 125 | 1 | 15 | 180 | 6 | 1 | 6 | −1 | | 140* | 4 | $C_{crbb'}$ 250pS | F-27 |
| 2SC 717 | RF.Conv.Mix Osc | " | 30 | 2 | 50 | 200 | 125 | 0.5 | 10 | >40 | 10 | 10 | 6 | −1 | 40 | 1100* | 1.2 | $C_{crbb'}$ 10pS | F-37 |
| 2SC 718 | SW | " | 20 | 4 | 200 | 300 | 175 | 0.4 | 15 | 60 | 1 | 10 | 10 | −10 | | 800* | 2 | | F-49C |
| 2SC 719 | " | " | 20 | 4 | 200 | 200 | 175 | 0.4 | 15 | 60 | 1 | 10 | 10 | −10 | | 800* | 2 | | F-46C |
| 2SC 720 | RF | Si.P | 25 | 3 | 20 | 200 | 175 | 0.05 | 6 | | | | 6 | −2 | 100 | 500* | 1.2 | 80* | F-50C |
| 2SC 721 | " | " | 25 | 3 | 20 | 200 | 120 | 0.05 | 6 | | | | 6 | −2 | 100 | 500* | 1.4 | 80* | F-30 |
| 2SC 722 | RF.Conv.Mix Osc | Si.EP | 20 | | 25 | 200 | 125 | 0.5 | 12 | | | | 6 | −2 | 80 | 700* | 1.5 | 80* | F-30 |
| 2SC 723 | " | Si.P | 20 | | 25 | 200 | 125 | 1 | 12 | | | | 6 | −2 | 60 | 500* | 1.5 | 80* | F-30 |
| 2SC 724 | RF.SW | Si.EP | 30 | 5 | 200 | 200 | 125 | 0.05 | 10 | 60 | 1 | 10 | 6 | −2 | 70 | 250* | 4 | 80* | F-138 |
| 2SC 725 | " | " | 60 | 5 | 200 | 200 | 125 | 0.05 | 10 | 60 | 1 | 10 | 6 | −2 | 70 | 250* | 4 | 80* | F-138 |
| 2SC 726 | SW | " | 20 | 4 | 200 | 200 | 125 | 1 | 15 | 60 | 1 | 10 | | −2 | | | | | F-30 |
| 2SC 727 | RF.AF.SW | Si.T | 100 | 3 | 100 | 350 | 175 | 1 | 30 | 90 | 4 | 10 | 6 | −22 | 60 | 20* | 9 | 40* | F-49C |
| 2SC 728 | " | " | 200 | 6 | 100 | 350 | 175 | 1 | 30 | 90 | 4 | 10 | 6 | −2 | 60 | 20* | 10 | 40* | F-49C |
| 2SC 729 | RF | Si.EP | 50 | 5 | 200 | 600 | 175 | 0.5 | 30 | | | | 10 | −10 | 60 | 250* | 4 | 40 | F-84A |
| 2SC 730 | PA | " | 40 | 4 | 400 | 1W | 175 | 10 | 15 | 50 | 10 | 100 | | | | | | | F-84B |
| 2SC 731 | " | " | 40 | 4 | 500 | 2.5W ($T_C$ = 25°C) | 175 | 1 | 20 | 70 | 13.5 | 100 | | | | | | | F-84B |
| 2SC 732 | RF | Si.E | 35 | 5 | 100 | 300 | 125 | 0.1 | 18 | 200-700 | 6 | 2 | 6 | −1 | | 80* | 6 | 100 | F-33 |
| 2SC 733 | " | " | 35 | 5 | 100 | 300 | 125 | 0.1 | 18 | 70-700 | 6 | 2 | 6 | −1 | | >80* | 7 | $C_{crbb'}$ 150pS | F-33 |
| 2SC 734 | " | " | 70 | 5 | 150 | 300 | 125 | 0.1 | 18 | 70-400 | 1 | 20 | 6 | −10 | | 150* | 5 | 15 | F-33 |
| 2SC 735 | " | " | 35 | 5 | 400 | 300 | 125 | 0.1 | 18 | 70-400 | 1 | 100 | 5 | −50 | | 300* | 7 | $C_{crbb'}$ 150pS | F-33 |
| 2SC 736 | SW | " | 135 | 5 | 5A | 50W ($T_C$ = 25°C) | 175 | 500 | 60 | 60 | 10 | 1A | | | | | | | F-102 |
| 2SC 737 | PA | Si.EP | 60 | 5 | 1.5A | 17W ($T_C$ = 25°C) | 175 | 500 | 30 | 50 | 10 | 100 | | | | | | | F-113 |
| 2SC 738 | RF | " | 25 | 4 | 20 | 150 | 125 | 1 | 12 | 20-300 | 6 | 1 | 6 | −1 | 60 | 400* | 1.5 | $C_{crbb'}$ 30pS | F-138B |
| 2SC 739 | RF.Conv. Mix.Osc | Si.EP | 25 | 4 | 20 | 150 | 125 | 1 | 12 | | | | 6 | −1 | 60 | 350* | 1.5 | $C_{crbb'}$ 30pS | F-40 |
| 2SC 740 | " | " | 25 | 2 | 20 | 150 | 150 | 0.5 | 10 | 40 | 10 | 10 | 10 | −10 | 40 | 900* | 1.4 | $C_{crbb'}$ 5pS | F-11A |
| 2SC 741 | PA | " | 40 | 4 | 300 | 2.5W ($T_C$ = 25°C) | 175 | 1 | 15 | 50 | 10 | 100 | | | | | | | F-84B |
| 2SC 742 | " | " | 65 | 4 | 1.5A | 12.5W ($T_C$ = 25°C) | 175 | 5 | 30 | | | | 10 | −150 | 30 | 400* | 8 | 10* | F-111 |
| 2SC 743 | " | " | 65 | 4 | 3A | 25W ($T_C$ = 25°C) | 175 | 10 | 30 | | | | 10 | −300 | 30 | 350* | 16 | 7 | F-111 |
| 2SC 744 | | | | | | | | | | | | | | | | | | | |
| 2SC 745 | PA | Si.EP | 50 | 4 | 1.5A | 15.5W ($T_C$ = 25°C) | 175 | 10 | 10 | | | | 10 | −150 | 45 | 450* | 8 | 8* | F-111 |
| 2SC 746 | " | " | 45 | 4 | 3A | 25W ($T_C$ = 25°C) | 175 | 20 | 10 | | | | 10 | −300 | 35 | 350* | 20 | 6* | F-111 |
| 2SC 747 | | | | | | | | | | | | | | | | | | | |
| 2SC 748 | PA | Si.EP | 36 | 4 | 1A | 12.5W ($T_C$ = 25°C) | 175 | 10 | 10 | | | | 10 | −150 | 25 | 400* | 16 | 7* | F-111 |
| 2SC 749 | " | " | 36 | 4 | 2A | 25W ($T_C$ = 25°C) | 175 | 25 | 10 | | | | 10 | −300 | 25 | 350* | 32 | 5* | F-111 |
| 2SC 750 | | | | | | | | | | | | | | | | | | | |
| 2SC 751 | RF | Si.EP | 20 | 2 | 20 | 100 | 150 | 1 | 10 | | | | 10 | -8 | 50 | 650* | 1.9 | 30 | F-46C |
| 2SC 752 | " | " | 30 | 4 | 100 | 100 | 125 | 0.5 | 20 | | | | 10 | −10 | 80 | 300* | 4 | 30 | F-33 |
| 2SC 753 | RF.Conv. | " | 25 | | 20 | 100 | 150 | 1 | 12 | | | | 6 | −2 | 70 | 1100* | 0.7 | $C_{crbb'}$ 12pS | F-23 |
| 2SC 754 | RF.Conv.Mix Osc | " | 20 | | 150 | 150 | 150 | 1 | 20 | 100 | 1 | 20 | 6 | −1 | 80 | 90* | 6.5 | 25 | F-23 |
| 2SC 755 | RF | " | 15 | | 100 | 150 | 150 | 0.1 | 15 | 270 | 3 | 0.5 | 3 | −0.5 | 300 | 100* | 8 | 30* | F-23 |
| 2SC 756 | PA | Si.E | 100 | 6 | 4A | 10W ($T_C$ = 25°C) | 175 | 3 | 50 | 80 | 2 | 100 | 10 | −50 | 60 | 65* | 35 | $C_{crbb'}$ 50pS | F-84C |
| 2SC 757 | RF.Conv.Mix Osc | " | 30 | | 20 | 100 | 150 | 1 | 12 | | | | 6 | −2 | 70 | 1100* | 0.7 | $C_{crbb}$ 10pS | F-23 |
| 2SC 758 | PA | Si.TMe | 280 | 5 | 8A | 60W ($T_C$ = 25°C) | 150 | 10 | 30 | | | | 5 | −0.5A | 35 | 18* | 275 | 10 | F-102 |
| 2SC 759 | " | " | 180 | 5 | 8A | 60W ($T_C$ = 25°C) | 150 | 10 | 30 | | | | 5 | −0.5A | 35 | 18* | 275 | 10 | F-102 |
| 2SC 760 | " | " | 100 | 5 | 8A | 60W ($T_C$ = 25°C) | 150 | 100 | 30 | | | | 5 | −0.5A | 35 | 18* | 275 | 10 | F-102 |
| 2SC 761 | RF.Conv.Mix Osc | Si.P | 30 | 3 | 20 | 150 | 175 | 100 | 30 | >25 | 10 | 2 | 10 | −2 | 675* | 0.28 | 60 | | F-50C |
| 2SC 762 | " | " | 30 | 3 | 20 | 150 | 175 | 100 | 30 | >25 | 10 | 2 | 10 | −2 | 40 | 600* | 0.28 | 60 | F-50C |
| 2SC 763 | " | Si.EP | 25 | 3 | 20 | 100 | 125 | 0.5 | 12 | 70 | 6 | 1 | 6 | −1 | | 400* | 1.5 | $C_{crbb'}$ 15pS | F-138B |
| 2SC 764 | SW | " | 40 | 5 | 200 | 360 | 200 | 0.1 | 20 | 85 | 1 | 10 | 10 | −10 | 80 | 750* | 2 | $C_{crbb'}$ 25pS | F-49C |
| 2SC 765 | PA | Si.TMe | 60 | | 2A | 30W ($T_C$ = 25°C) | 150 | 1mA | 30 | 60 | 4 | 1A | | | | | | | F-102 |
| 2SC 766 | " | " | 120 | | 2A | 30W ($T_C$ = 25°C) | 150 | 1mA | 30 | 60 | 4 | 1A | | | | | | | F-102 |
| 2SC 767 | " | " | 180 | | 2A | 30W ($T_C$ = 25°C) | 150 | 1mA | 30 | 60 | 4 | 1A | | | | | | | F-102 |
| 2SC 768 | PA.SW | " | 60 | 5 | 10A | 50W ($T_C$ = 25°C) | 150 | 1mA | 30 | 25 | 4 | 2A | | | | | | | F-102 |

**Pin Configurations are 1. Emitter, 2. Base, 3. Collector, 4. Shield, unless otherwise specified. (Outline Dimensions: mm)**

| TYPE NO. | USES | MATERIAL STRUCTURE | $V_{CBO}$ (V) | $V_{EBO}$ (V) | Ic (mA) | Pd (mW) | Tj (°C) | $I_{CBO}$ (uA) | VALUE OF DC/PULSE | | | | BIAS | | hfe hfb* | fab fT (Mc) | Cob (pF) | $r_{bb'}$ $h_{ie(real)}$* (Ω) | CASE STYLE |
|---|---|---|---|---|---|---|---|---|---|---|---|---|---|---|---|---|---|---|---|
| | | | | | | | | | $V_{CB}$(V) | hFE | $V_{CE}$(V) | $I_C$(mA) | $V_{CB}$(V) | $I_E$(mA) | | | | | |
| 2SC 769 | PA.SW | Si.TMe | 120 | 5 | 10A | 50W | 150 | 1mA | 30 | 25 | 4 | 2A | | | | | | | F-102 |
| 2SC 770 | " | " | 200 | 5 | 10A | 50W | 150 | 1mA | 30 | 25 | 4 | 2A | | | | | | | F-102 |
| 2SC 771 | " | " | 250 | 5 | 10A | 50W | 150 | 1mA | 30 | 25 | 4 | 2A | | | | | | | F-102 |
| 2SC 772 | RF.Conv. Mix.Osc | Si.EP | 15 | | 30 | 120 | 125 | 1 | 10 | 60 | 6 | 1 | 6 | −1 | | 300* | 1.5 | Ccrbb' 30pS | F-27 |
| 2SC 773 | Osc | " | 50 | 5 | 200 | 250 | 125 | 1 | 25 | | | | 6 | −10 | 60 | | | | F-138B |
| 2SC 774 | PA | " | 50 | 4 | 500 | 680 | 175 | 10 | 30 | 70 | 10 | 100 | | | | | | | F-84B |
| 2SC 775 | " | " | 75 | 4 | 1A | 800 | 200 | 10 | 30 | 70 | 10 | 100 | | | | | | | F-84B |
| 2SC 776 | " | " | 75 | 4 | 1A | 1W | 200 | 10 | 30 | 70 | 10 | 100 | | | | | | | 84B |
| 2SC 777 | " | " | 75 | 4 | 1A | 2W | 200 | 10 | 30 | 50 | 10 | 100 | | | | | | | F-97B |
| 2SC 778 | " | " | 80 | 4 | 2A | 2.5W | 200 | 10 | 30 | 50 | 10 | 100 | | | | | | | F-97B |
| 2SC 779 | SW | Si.TMe | 300 | 6 | 2A | 25W | 150 | 100 | 200 | 30-200 | 10 | 100 | 10 | −100 | | 20* | 40 | | F-99 |
| 2SC 780 | RF | Si.EP | 70 | 2 | 20 | 150 | 125 | 5 | 70 | | | | 10 | −2 | 60 | 100* | 3 | 50 | F-33 |
| 2SC 781 | RF.PA | " | 75 | 5 | 1A | 5W | 175 | 1 | 40 | | | | 10 | −150 | 80 | 350* | 11 | 13* | F-84A |
| 2SC 782 | PA | Si.TMe | 300 | 5 | 1.5A | 20W | 150 | 100 | 200 | 30-240 | 10 | 100 | 10 | −100 | | 10* | 50 | 25 | F-99 |
| 2SC 783 | " | " | 200 | 5 | 1.5A | 20W | 150 | 100 | 200 | 30-240 | 10 | 100 | 10 | −100 | | 10* | 50 | 25 | F-99 |
| 2SC 784 | RF | Si.EP | 40 | 4 | 20 | 100 | 125 | 0.5 | 18 | 25-140 | 6 | 1 | 6 | −1 | | 500* | Cre 0.65 | Ccrbb' 10pS | F-33 |
| 2SC 785 | Conv.Mix Osc | " | 40 | 4 | 20 | 100 | 125 | 0.5 | 18 | 25-140 | 6 | 1 | 6 | −1 | | 500* | Cre 0.65 | Ccrbb' 10pS | F-33 |
| 2SC 786 | RF | " | 20 | 3 | 20 | 200 | 150 | 0.05 | 10 | 20-200 | 5 | 4 | 10 | −4 | | > 250* | Cre 0.25-0.55 | > 25 | |
| 2SC 787 | RF.LN | Si.P | 25 | 3 | 20 | 150 | 150 | 0.025 | 10 | > 25 | 10 | 2 | 10 | −2 | | 1000* | Cre 0.3 | | F-50C |
| 2SC 788 | RF.SW | Si.T | 250 | 5 | 50 | 800 | 150 | 0.1 | 30 | 25-240 | 5 | 10 | 30 | −10 | | 120* | 4 | 25 | F-84B |
| 2SC 789 | RF.PA | Si.TMe | 70 | 5 | 4A | 30W | 150 | 30 | 50 | 40-240 | 5 | 500 | 5 | −500 | | > 3* | 150 | | F-119 |
| 2SC 790 | Pa | " | 50 | 5 | 3A | 25W | 150 | 20 | 30 | 40-240 | 2 | 500 | 2 | −500 | | > 3* | 70 | | F-119 |
| 2SC 791 | " | Si.TMe | 90 | 5 | 1.5A | 15W | 150 | 10 | 30 | 40-250 | 2 | 200 | 5 | −500 | | 20 | 40 | | F-99 |
| 2SC 792 | " | " | 300 | 5 | 1.5A | 50W | 150 | 50 | 300 | 30-250 | 10 | 300 | 10 | −100 | | 10* | 80 | | F-102 |
| 2SC 793 | " | Si.TMe | 100 | 5 | 7A | 60W | 150 | 1mA | 30 | 30-200 | 5 | 1A | 5 | −500 | | 9* | 220 | | F-102 |
| 2SC 794 | " | " | 70 | 5 | 7A | 60W | 150 | 1mA | 30 | 50 | 5 | 1A | 5 | −500 | 50 | 9* | 230 | 15 | F-102 |
| 2SC 795 | " | Si.DB | 250 | 6 | 100 | 9W | 150 | 10 | 100 | 70 | 10 | 10 | 10 | −10 | 70 | 180* | 7 | Ccrbb' 50pS | F-100 |
| 2SC 796 | RF.Osc | Si.EP | 40 | | 500 | 1W | 175 | 5 | 12 | 50 | 4 | 150 | 20 | −15 | | 230* | 5 | 20* | |
| 2SC 797 | PA | " | 60 | | 500 | 1W | 175 | 5 | 12 | 30 | 4 | 150 | 20 | −15 | | 150* | 5 | 12* | F-84B |
| 2SC 798 | " | Si.TP | 60 | | 1.5A | 5W | 175 | 5 | 12 | 70 | 4 | 400 | | | | | | | F-84B |
| 2SC 799 | RF.PA | Si.EP | 80 | 5 | 1.5A | 10W | 175 | 1 | 40 | 90 | 10 | 150 | 10 | −150 | | 250* | 15 | | F-97B |
| 2SC 800 | RF | Si.TMe | 30 | 4 | 20 | 100 | 150 | 0.1 | 25 | 8 | 6 | 2 | 6 | −2 | 85 | 800* | 0.5 | Ccrbb' 2pS | F-23 |
| 2SC 801 | RF.PA | " | 75 | 5 | 500 | 13W | 175 | 1 | 50 | 50 | 10 | 150 | 10 | −50 | 45 | 100* | 32 | 12* | F-83 |
| 2SC 802 | PA.SW | Si.EP | 60 | 4 | 500 | 1W | 175 | 5 | 12 | 30 | 4 | 150 | 20 | −15 | | 180* | 5 | 12* | F-84B |
| 2SC 803 | " | Si.TP | 60 | 4 | 1.5A | 5W | 175 | 1 | 12 | 70 | 4 | 400 | | | | 90* | 9 | 7* | F-84B |
| 2SC 804 | RF.Conv. Mix.Osc | Si.DB | 15 | | 20 | 150 | 100 | 0.5 | 15 | 50 | 3 | 1 | 6 | −4 | | | 0.32 | 40* | F-24 |
| 2SC 805 | RF.AF.DB | Si.DB | 100 | 5 | 200 | 475 | 120 | 1 | 25 | 100 | 5 | 3 | 10 | −2 | | 160* | 3 | Ccrbb' 80pS | F-84B |
| 2SC 806 | PA | Si.TMe | 650 | 10 | 10A | 125W | 150 | 5mA | 500 | 30 | 3 | 2A | 10 | −0.5A | 50 | 5* | 280 | 5 | F-102 |
| 2SC 807 | " | " | 500 | 10 | 10A | 125W | 150 | 5mA | 500 | 50 | 3 | 100 | 10 | −0.5A | 50 | 5* | 300 | 5 | F-102 |
| 2SC 808 | " | " | 300 | 8 | 5A | 80W | 150 | 30 | 50 | 100 | 3 | 2A | 10 | −500 | | 12* | 310 | Ccrbb' 700pS | F-102 |
| 2SC 809 | RF | Si.EP | 25 | 3 | 20 | 200 | 150 | 0.1 | 12 | | | | 6 | −2 | 90 | 1200* | 1.4 | 40* | F-50C |
| 2SC 810 | RF.PA | " | 40 | 3 | 300 | 500 | 150 | 1 | 35 | | | | 15 | −50 | 70 | 750* | 3.8 | 25* | F-85B |
| 2SC 811 | RF | " | | 4 | 30 | 180 | 175 | 0.5 | 15 | 60 | 10 | 2 | 10 | −2 | | 800* | 0.9 | 50 | F-50C |
| 2SC 812 | SW | Si.EP | 20 | 4 | 100 | 250 | 150 | 0.5 | 10 | 50 | 1 | 10 | | | | | 2.5 | | F-49C |
| 2SC 813 | | | | | | | | | | | | | | | | | | | |
| 2SC 814 | RF.PA | Si.EP | 30 | 5 | 500 | 400 | 125 | 0.2 | 18 | 150 | 5 | 50 | 10 | −10 | 180* | 13 | 25 | | F-44 |
| 2SC 815 | RF.Osc PA | " | 60 | 5 | 200 | 250 | 125 | 0.1 | 45 | 80 | 1 | 50 | 10 | −10 | 80 | 200* | 5.5 | 25 | F-138 |
| 2SC 816 | RF | " | 60 | | 1A | 1W | 200 | 10 | 28 | 100 | 6 | 0.1 | 10 | −30 | | 140* | 12 | Ccrbb' 60pS | F-84B |
| 2SC 817 | " | " | 30 | | 20 | 120 | 150 | 0.1 | 12 | 80 | 10 | 1 | | | | | | | F-50C |
| 2SC 818 | | Si.TP | 160 | 5 | 100 | 800 | 200 | | | 20-180 | 10 | 10 | | | | 100* | 4.5 | Ccrbb' 14pS | F-84A |
| 2SC 819 | PA | Si.EP | 65 | 4 | 1A | 6W | 175 | 100 | 65 | | | | 28 | −100 | 30 | 500* | 7.5 | 12 | F-84C |
| 2SC 820 | " | " | 65 | 4 | 1.5A | 10W | 175 | 100 | 65 | | | | 28 | −100 | 30 | 500* | 7.5 | 10 | F-121 |
| 2SC 821 | RF.Conv.Mix Osc.PA | " | 40 | 4 | 300 | 2.5W | 175 | 1 | 20 | | | | 13.5 | −100 | 70 | 450* | 6.5 | 15* | F-84B |
| 2SC 822 | " | " | 40 | 4 | 500 | 2.5W | 175 | 1 | 20 | | | | 13.5 | −100 | 70 | 550* | 6.5 | 15* | F-84B |
| 2SC 823 | RF | " | 30 | 3 | 60 | 600 | 150 | 0.1 | 10 | | | | 10 | −15 | 130 | 1500* | 0.9 | Ccrbb' 3pS | F-85A |
| 2SC 824 | " | " | 50 | 3 | 120 | 650 | 150 | 0.1 | 10 | | | | 10 | −50 | 130 | 1300* | 2.2 | Ccrbb' 4pS | F-85A |
| 2SC 825 | SW | SiT | 300 | 6 | 2A | 30W | 175 | 20 | 150 | 75 | 10 | O.5A | | | | | | | F-99 |
| 2SC 826 | RF | Si.TMe | 100 | 6 | 300 | 700 | 175 | 1 | 30 | 100 | 4 | 50 | 30 | −10 | | 20* | 10 | 30 | F-84B |
| 2SC 827 | RF.SW | " | 100 | 6 | 500 | 700 | 175 | 1 | 30 | 100 | 4 | 50 | 30 | −10 | | 20* | 10 | 30 | F-84B |
| 2SC 828 | RF.AF | Si.EP | 30 | 5 | 50 | 250 | 125 | 1 | 10 | 65-700 | 5 | 2 | 5 | −2 | 220 | 220* | 2.2 | 70 | F-42 |

**Pin Configurations are 1. Emitter, 2. Base, 3. Collector, 4. Shield, unless otherwise specified. (Outline Dimensions: mm)**

| TYPE NO. | USES | MATERIAL STRUCTURE | $V_{CBO}$ (V) | $V_{EBO}$ (V) | $I_C$ (mA) | Pd (mW) | Tj (°C) | $I_{CBO}$ (uA) | VALUE OF DC/PULSE $V_{CB}$(V) | $h_{FE}$ | $V_{CE}$(V) | $I_C$(mA) | BIAS $V_{CB}$(V) | $I_E$(mA) | hfe hfb* | fab fT (Mc) | Cob (pF) | $r_{bb'}$ $h_{ie(real)}$* (Ω) | CASE STYLE |
|---|---|---|---|---|---|---|---|---|---|---|---|---|---|---|---|---|---|---|---|
| 2SC 828A | RF.AF | Si.EP | 45 | 5 | 50 | 250 | 125 | 1 | 10 | 65-700 | 5 | 2 | 5 | −2 | 220 | 220* | 2.2 | 70 | F-42 |
| 2SC 829 | RF.Conv. Mix.Osc | " | 30 | 5 | 30 | 250 | 125 | 1 | 10 | 40-500 | 10 | 1 | 10 | −1 | 130 | 230* | 1.3 | 35 | F-42 |
| 2SC 830 | PA | Si.TMe | 50 | 4 | 3A | 25W | 150 | 100 | 20 | 80 | 4 | 1A | 4 | −500 | | 20* | 75 | 15 | |
| 2SC 831 | PA | Si.EP | 50 | 4 | 2A | 23W | 175 | 5 | 20 | 15-200 | 10 | 1A | 10 | −30 | 80 | 500* | 18 | | F-111 |
| 2SC 832 | | | | | | | | | | | | | | | | | | | |
| 2SC 833 | SW | Si.TMe | 450 | 6 | 2A | 25W | 150 | 100 | 200 | 80 | 10 | 100 | 10 | −100 | | 50 | | | F-99 |
| 2SC 834 | | | | | | | | | | | | | | | | | | | |
| 2SC 835 | | | | | | | | | | | | | | | | | | | |
| 2SC 836 | RF | Si.P | 30 | 4 | 20 | 200 | 125 | 0.2 | 20 | 70 | 10 | 4 | 10 | −4 | 60 | 600* | 0.9 | $C_{crbb'}$ 3 pS | F-138 |
| 2SC 837 | " | Si.EP | 30 | 4 | 20 | 250 | 125 | 0.2 | 20 | 40 | 10 | 10 | 10 | −10 | 30 | 55 | | | |
| 2SC 838 | RF.Conv. Mix.Osc | " | 50 | 5 | 30 | 250 | 125 | 0.1 | 15 | 80 | 3 | 0.5 | 6 | −1 | 90 | 250* | 1.8 | $C_{crbb}$ 20pS | F-138 |
| 2SC 839 | " | " | 50 | 5 | 30 | 250 | 125 | 0.1 | 15 | 80 | 3 | 0.5 | 6 | −1 | 90 | 250* | 1.8 | $C_{crbb'}$ 20pS | F-138 |
| 2SC 840 | PA | Si.TMe | 100 | 5 | 2A | 20W | 150 | 5mA | 100 | 60 | 3 | 1A | 3 | −100 | 60 | 50* | 90 | 25 | F-99 |
| 2SC 840A | RF.Conv. Mix.Osc | Si.EP | 150 | 5 | 2A | 20W | 150 | 5mA | 100 | 60 | 3 | 1A | 3 | −100 | 60 | 50* | 90 | 25 | F-99 |
| 2SC 841 | PA | " | 36 | | 500 | 6W | 175 | 5 | 12 | 50 | 4 | 500 | 12 | −150 | | 450* | 12 | 12* | F-84B |
| 2SC 842 | " | " | 36 | | 1A | 10W | 175 | 5 | 12 | 40 | 4 | 1A | 12 | −150 | | 450* | 13 | 10* | F-111 |
| 2SC 843 | " | " | 36 | | 2A | 20W | 175 | 12 | 12 | 50 | 4 | 2A | 12 | −150 | | 350* | 25 | 7* | F-111 |
| 2SC 844 | " | " | 40 | 2 | 400 | 3.5W | 175 | 1 | 12 | 25 | 5 | 100 | 15 | −30 | 40 | 800* | 3 | 20* | F-84B |
| 2SC 845 | " | " | 55 | 3.5 | 400 | 3.5W | 175 | 1 | 12 | 25 | 5 | 100 | 15 | −30 | 40 | 800* | 3 | 20* | F-84B |
| 2SC 846 | | | | | | | | | | | | | | | | | | | |
| 2SC 847 | RF | Si.EP | 30 | 5 | 200 | 350 | 175 | 0.5 | 12 | 160 | 4 | 10 | 6 | −1 | | 70* | 10 | 40 | F-49C |
| 2SC 848 | RF.LN | " | 30 | 5 | 200 | 350 | 175 | 0.1 | 12 | 160 | 4 | 10 | 6 | −1 | | 60 | 10 | 40 | F-49C |
| 2SC 849 | SW.AF | " | 30 | 5 | 300 | 350 | 175 | 0.5 | 12 | 160 | 4 | 10 | 6 | −1 | | $t_r$ < 0.08uS, $t_f$ < 0.8uS | | 0.15uS | F-49C |
| 2SC 850 | SW.PA | " | 50 | 7 | 500 | 350 | 175 | 0.5 | 12 | 160 | 4 | 10 | 6 | −1 | | 70* | | | F-49C |
| 2SC 851 | PA | " | 50 | 5 | 8A | 75W | 200 | 500 | 30 | 50 | 5 | 5A | | | | | | | F-118 |
| 2SC 852 | RF | " | 45 | 3 | 80 | 500 | 150 | 0.5 | 15 | 100 | 6 | 20 | 6 | −20 | | 1100* | 2 | $C_{crbb'}$ 3.7pS | F-85B |
| 2SC 853 | RF.PA | Si.EP | 70 | | 200 | 400 | 125 | 0.1 | 60 | 70 | 2 | 150 | 10 | −10 | 110 | 90* | 7.5 | 40* | F-44 |
| 2SC 854 | PA | " | 40 | 2 | 300 | 2.5W | 175 | 1 | 12 | 25 | 5 | 100 | 15 | −30 | 40 | 800* | 2.5 | 20* | F-84B |
| 2SC 855 | " | " | 40 | 2 | 400 | 3W | 175 | 1 | 12 | 25 | 5 | 100 | 15 | −30 | 40 | 800* | 2.5 | 20* | F-84B |
| 2SC 856 | RF | Si.TPa | 150 | 5 | 50 | 300 | 175 | 1 | 20 | 50 | 6 | 10 | 6 | −10 | | 150* | 2.5 | 25* | F-12A |
| 2SC 857 | SW.RF | Si.TMe | 200 | 5 | 50 | 200 | 175 | 0.1 | 20 | 80 | 6 | 10 | 6 | −10 | | 100* | 3 | 40 | F-12A |
| 2SC 858 | RF.LN | Si.P | 20 | | 50 | 100 | 125 | 1 | 15 | 230 | 6 | 1 | 6 | −1 | | 140* | 4 | $C_{crbb'}$ 250pS | F-27 |
| 2SC 859 | " | " | 20 | | 50 | 100 | 125 | 1 | 15 | 230 | 6 | 1 | 6 | −1 | | 140* | 4 | $C_{crbb'}$ 250pS | F-27 |
| 2SC 860 | RF | Si.EP | 15 | 3 | 30 | 80 | 125 | 1 | 10 | 80 | 6 | 1 | 6 | −1 | | 700* | 1.5 | $C_{crbb'}$ 50pS | F-205C |
| 2SC 861 | PA | Si.TMe | 450 | 6 | 1A | 50W | 150 | 1mA | 30 | 50 | 5 | 200 | 15 | −200 | | 7* | 140 | 10 | F-102 |
| 2SC 862 | | " | 650 | 6 | 5A | 50W | 150 | 1mA | 30 | 9 | 2 | 3.5A | 15 | −200 | | 7* | 140 | 10 | F-102 |
| 2SC 863 | RF | Si.EP | 60 | 4 | 25 | 175 | 150 | 1 | 10 | | | | 10 | −5 | 100 | 600* | 1.5 | 10 | F-117C |
| 2SC 864 | " | " | 40 | 4 | 25 | 175 | 150 | 1 | 10 | | | | 10 | −5 | 100 | 600* | 1.5 | 10 | F-117C |
| 2SC 865 | PA | Si.TP | 60 | | 2A | 20W | 175 | 5 | 30 | 70 | 4 | 1A | | | | | | | F-83 |
| 2SC 866 | " | " | 60 | | 1.5A | 5W | 175 | 5 | 12 | 70 | 4 | 400 | | | | | | | F-97B |
| 2SC 867 | PASW | Si.TMe | 400 | 10 | 1A | 23W | 150 | 100 | 50 | 80 | 3 | 100 | 10 | −200 | | 8* | 120 | 12 | F-100 |
| 2SC 868 | SW | Si.EP | 130 | 5 | 30 | 200 | 125 | 0.1 | 25 | 90 | 6 | 1 | | | | | | | F-138B |
| 2SC 869 | " | " | 160 | 5 | 30 | 200 | 125 | 0.1 | 25 | 90 | 6 | 1 | | | | | | | F-138B |
| 2SC 870 | RF.AF.LN | " | 30 | 4 | 30 | 200 | 125 | 0.1 | 25 | 160 | 6 | 0.1 | 6 | −0.1 | 190 | 150* | 2.5 | $C_{crbb'}$ 200pS | F-41 |
| 2SC 871 | " | " | 30 | 4 | 30 | 200 | 125 | 0.1 | 25 | 250 | 6 | 0.1 | 6 | −0.1 | 270 | 150* | 2.5 | $C_{crbb'}$ 200pS | F-41 |
| 2SC 872 | PA | " | 40 | | 400 | 3.5W | 175 | 1 | 12 | 25 | 5 | 100 | 13.5 | −30 | | 800* | 3 | 20* | F-84C |
| 2SC 873 | | | 75 | 4 | 1A | 500 | 150 | 100 | 70 | 60 | 6 | 50 | | | | 200* | | $C_{crbb'}$ 50pS | |
| 2SC 874 | | | 50 | 4 | 1A | 500 | 150 | 100 | 45 | 60 | 6 | 50 | | | | 200* | | $C_{crbb'}$ 50pS | |
| 2SC 875 | RF.PA | Si.TP | 75 | 5 | 200 | 500 | 150 | 10 | 40 | 100 | 6 | 50 | 6 | −10 | | 170* | 5 | | F-84B |
| 2SC 876 | " | " | 50 | 5 | 200 | 500 | 150 | 10 | 40 | 100 | 6 | 50 | 6 | −10 | | 170* | 5 | | F-84B |
| 2SC 877 | SW | Si.EP | 40 | 4.5 | 200 | 300 | 175 | 0.1 | 20 | 60 | 1 | 10 | | | | | | | F-49C |
| 2SC 878 | " | " | 40 | 4.5 | 200 | 300 | 175 | 0.1 | 20 | 70 | 1 | 10 | | | | | | | F-49C |
| 2SC 879 | " | " | 60 | 5 | 1A | 800 | 175 | 1 | 40 | 80 | 1 | 100 | | | | | | | F-84A |
| 2SC 880 | " | " | 60 | 5 | 1A | 800 | 175 | 1 | 40 | 80 | 1 | 100 | | | | | | | F-84A |
| 2SC 881 | RF.PA | " | 60 | | 200 | 400 | 125 | 0.1 | 45 | 70 | 2 | 150 | 10 | −10 | 110 | 200* | 5.5 | 25 | F-44 |
| 2SC 882 | RF.Conv. Osc | " | 150 | 5 | 2A | 25W | 150 | 50 | 30 | | | | 5 | −0.5A | 50 | 30* | 45 | 7 | F-102 |
| 2SC 883 | " | " | 90 | 5 | 2A | 25W | 150 | 100 | 30 | | | | 5 | −0.5A | 50 | 30* | 45 | 7 | F-102 |
| 2SC 884 | PA | Si.TMe | 80 | 5 | 2A | 15W | 150 | 100 | 30 | 60 | 5 | 500 | 5 | −200 | | 30* | 45 | 7 | F-99 |
| 2SC 885 | SW | " | 330 | 5 | 7A | 50W | 150 | 50 | 30 | 35 | 5 | 1A | | | | | | | F-102 |
| 2SC 886 | " | " | 270 | 5 | 7A | 50W | 150 | 50 | 30 | 35 | 5 | 1A | | | | | | | F-102 |

**Pin Configurations are 1. Emitter, 2. Base, 3. Collector, 4. Shield, unless otherwise specified. (Outline Dimensions: mm)**

| TYPE NO. | USES | MATERIAL STRUCTURE | $V_{CBO}$ (V) | $V_{EBO}$ (V) | Ic (mA) | Pd (mW) | Tj (°C) | $I_{CBO}$ (uA) | $V_{CB}$(V) | VALUE OF DC/PULSE hFE | $V_{CE}$(V) | $I_C$(mA) | BIAS $V_{CB}$(V) | BIAS $I_E$(mA) | hfe hfb* | fab fT (Mc) | Cob (pF) | $r_{bb'}$ $h_{ie(real)}$* (Ω) | CASE STYLE |
|---|---|---|---|---|---|---|---|---|---|---|---|---|---|---|---|---|---|---|---|
| 2SC 887 | SW | Si.TMe | 210 | 5 | 7A | 50W (Tc = 25°C) | 150 | 50 | 30 | 35 | 5 | 1A | | | | | | | F-102 |
| 2SC 888 | " | " | 150 | 5 | 7A | 50W (Tc = 25°C) | 150 | 100 | 30 | 35 | 5 | 1A | | | | | | | F-102 |
| 2SC 889 | RF.AF.LN | Si.EP | 90 | 5 | 7A | 50W (Tc = 25°C) | 150 | 100 | 30 | 35 | 5 | 1A | | | | | | | F-102 |
| 2SC 890 | PA | " | 40 | 3 | 400 | 750 | 175 | 5 | 20 | | | | 10 | —50 | 40 | | | | F-84C |
| 2SC 891 | " | " | 40 | 4 | 600 | 10.3W (Tc = 25°C) | 175 | 10 | 20 | | | | 10 | —100 | 40 | | | | F-115 |
| 2SC 892 | " | " | 40 | 4 | 1.2A | 17.7W (Tc = 25°C) | 175 | 20 | 20 | | | | 10 | —300 | 40 | | | | F-115 |
| 2SC 893 | RF | Si.TMe | 100 | 6 | 500 | 12W (Tc = 25°C) | 175 | 1 | 30 | 100 | 4 | 50 | 4 | —50 | | 20* | 10 | 30 | F-97 |
| 2SC 894 | RF.SW | Si.DB | 25 | 6 | 100 | 100 | 120 | 0.2 | 25 | 100 | 3 | 1 | 6 | —2 | | 200* | 2.4 | $Ccrbb'$ 120pS | F-38 |
| 2SC 895 | PA.SW | Si.TMe | 150 | 8 | 2.5A | 20W (Tc = 25°C) | 150 | 50 | 50 | 120 | 3 | 100 | 10 | —200 | | 20* | 145 | 24 | F-100 |
| 2SC 896 | RF | Si.EP | 55 | 5 | 200 | 300 | 175 | 1 | 20 | | | | 10 | —5 | 70 | 200* | 3.5 | 35* | F-46C |
| 2SC 897 | PA | Si.TMe | 150 | 6 | 7A | 60W (Tc = 25°C) | 150 | 1mA | 30 | 80 | 5 | 1A | | 15 | 140 | 10* | | | F-102 |
| 2SC 898 | " | " | 150 | 5 | 7A | 80W (Tc = 25°C) | 150 | 1mA | 30 | 50 | 5 | 1A | 5 | —1A | | 15* | 140 | 10* | F-102 |
| 2SC 899 | RF.AF.LN | Si.EP | 50 | 5 | 50 | 250 | 125 | 0.1 | 15 | 110 | 3 | 0.5 | 6 | —1 | 140 | 250* | 1.8 | $Ccrbb'$ 70pS | F-138 |
| 2SC 900 | RF.LN | Si.E | 30 | 5 | 30 | 250 | 125 | 0.1 | 25 | 400 | 3 | 0.5 | 3 | —1 | | 100* | 3.5 | 50* | F-138 |
| 2SC 901 | PA | Si.TMe | 200 | 6 | 5A | 50W (Tc = 70°C) | 150 | 15mA | 150 | 25 | 4 | 5A | 10 | —500 | | 50* | | | F-102 |
| 2SC 901A | " | Si.EP | 250 | 6 | 5A | 50W (Tc = 70°C) | 150 | 15mA | 150 | 25 | 4 | 5A | 10 | —500 | | 50* | | | F-102 |
| 2SC 902 | SW | Si.TMe | 150 | 6 | 10A | 75W (Tc = 25°C) | 175 | 15 | 30 | 50 | 4 | 5A | | | | | | | F-102 |
| 2SC 903 | PA | Si.EP | 35 | 4 | 300 | 200 | 125 | 1 | 25 | 100 | 2 | 150 | 6 | —10 | | 150* | 10 | $Ccrbb'$ 100pS | F-41 |
| 2SC 904 | " | " | 50 | 4 | 300 | 200 | 125 | 1 | 25 | 100 | 2 | 150 | 6 | —10 | | 150* | 10 | | F-41 |
| 2SC 905 | " | " | 65 | 4 | 300 | 200 | 125 | 1 | 25 | 80 | 2 | 150 | 6 | —10 | | 150* | 10 | | F-41 |
| 2SC 906 | PA.SW | " | 50 | 7 | 500 | 600 | 175 | 0.5 | 12 | 160 | 4 | 10 | 6 | —1 | | 70* | | | F-89 |
| 2SC 907 | RF.SW.AF | Si.DB | 40 | 5 | 100 | 200 | 175 | 0.5 | 20 | 200 | 1 | 10 | 6 | —1 | | 240* | 1.7 | 150 | F-12A |
| 2SC 907A | " | " | 60 | 5 | 100 | 200 | 175 | 0.5 | 20 | 120 | 1 | 10 | 6 | —1 | | 240* | 1.7 | 150 | F-12A |
| 2SC 908 | PA | Si.EP | 40 | 4 | 500 | 860 | 175 | 50 | 15 | 50 | 10 | 100 | | | | | | | F-84B |
| 2SC 909 | " | " | 40 | 4 | 500 | 7W (Tc = 25°C) | 200 | 50 | 15 | 50 | 10 | 100 | | | | | | | F-113 |
| 2SC 910 | " | " | 40 | 3 | 1A | 10W (Tc = 25°C) | 200 | 100 | 15 | | | | 10 | —100 | 50 | | | | F-113 |
| 2SC 911 | " | " | 40 | 4 | 500 | 1.7W | 175 | 50 | 15 | 50 | 10 | 100 | | | | | | | F-125 |
| 2SC 912 | RF.Conv.Mix Osc.SW | Si.EP | 30 | 5 | 100 | 150 | 150 | 0.1 | 25 | 90 | 6 | 10 | 6 | —1 | 80 | 150* | 2.5 | $Ccrbb'$ 100pS | F-8A |
| 2SC 913 | SW | " | 40 | 5 | 300 | 300 | 175 | 0.2 | 20 | 70 | 1 | 30 | | | | | | | F-49C |
| 2SC 914 | " | " | 40 | 5 | 300 | 300 | 175 | 0.2 | 20 | 70 | 1 | 30 | | | | | | | F-49C |
| 2SC 915 | SW | Si.EP | 30 | 5 | 300 | 300 | 175 | 0.2 | 20 | 70 | 1 | 30 | | | | | | | F-49C |
| 2SC 916 | " | " | 100 | 5.5 | 1.5A | 2W | 175 | 10 | 80 | 70 | 1 | 400 | | | | | | | F-83 |
| 2SC 917 | RF | Si.P | 40 | | 50 | 300 | 175 | 10 | 40 | 40 | 10 | 10 | 10 | —'10 | | 800* | 1 | $Ccrbb'$ 5pS | F-56C |
| 2SC 918 | " | Si.DB | 20 | | 30 | 188 | 100 | 0.2 | 15 | 80 | 10 | 4 | 10 | —4 | | 0.7 | | $Ccrbb'$ 10pS | F-205C |
| 2SC 919 | | | | | | | | | | | | | | | | | | | |
| 2SC 920 | RF.Conv. Mix.Osc.LN | Si.EP | 50 | 5 | 30 | 150 | 150 | 0.1 | 15 | 75 | 3 | 0.5 | 6 | —1 | | 250* | 1.6 | $Ccrbb'$ 30pS | F-23 |
| 2SC 921 | RF.Conv. Mix.Osc. | " | 25 | 2 | 10 | 100 | 150 | 0.1 | 12 | 65 | 3 | 0.5 | 6 | —1 | | 650* | 0.9 | $Ccrbb'$ 9pS | F-23 |
| 2SC 922 | " | Si.E | 30 | 5 | 20 | 250 | 125 | 0.1 | 20 | 80 | 6 | 1 | 6 | —1 | | 650* | 1.1 | $Ccrbb'$ 15pS | F-138 |
| 2SC 923 | RF.AF | " | 40 | 5 | 100 | 250 | 125 | 0.05 | 40 | 500 | 3 | 0.5 | 3 | —1 | | 100* | 3.5 | 50* | F-138 |
| 2SC 924 | " | Si.EP | 30 | | 50 | 250 | 125 | 0.1 | 15 | 100 | 3 | 0.5 | 6 | —1 | 130 | 250* | 1.8 | $Ccrbb'$ 20pS | F-138 |
| 2SC 925 | RF.AF.SW | " | 30 | 5 | 50 | 250 | 125 | 0.1 | 30 | 130 | 12 | 2 | 12 | —2 | 140 | 250* | 1.8 | 50 | F-138 |
| 2SC 926 | RF.SW | Si.DB | 115 | 3.5 | 100 | 100 | 120 | 0.2 | 115 | 50 | 3 | 1 | 10 | —2 | | 160* | 2.5 | $Ccrbb'$ 40pS | F-38 |
| 2SC 927 | RF.LN | Si.TP | 30 | 3 | 20 | 150 | 125 | 1 | 25 | 80 | 6 | 1 | 6 | —3 | | 500* | 0.7 | $Ccrbb'$ 3.0pS | F-205C |
| 2SC 928 | RF | " | 30 | 3 | 20 | 150 | 125 | 1 | 25 | 80 | 6 | 1 | 6 | —3 | | 500* | 0.7 | $Ccrbb'$ 3pS | F-205C |
| 2SC 929 | RF.Conv.LN | Si.EP | 15 | 5 | 30 | 120 | 125 | 1 | 10 | 100 | 6 | 1 | 6 | —1 | | 300* | 1.5 | $Ccrbb'$ 20pS | F-166 |
| 2SC 930 | RF | " | 15 | 5 | 30 | 120 | 125 | 1 | 10 | 80 | 6 | 1 | 6 | —1 | | 300* | 1.5 | $Ccrbb'$ 20pS | F-166 |
| 2SC 931 | PA | Si.TMe | 50 | | 3A | 10W (Tc = 25°C) | 125 | 1mA | 45 | 70 | 2 | 1A | 5 | —0.5A | | 120* | 100 | 35 | F-120 |
| 2SC 932 | " | " | 30 | | 3A | 10W (Tc = 25°C) | 125 | 1mA | 25 | 70 | 2 | 1A | 5 | —0.5A | | 120* | 100 | 35 | F-120 |
| 2SC 933 | RF.AF | Si.EP | 50 | 5 | 300 | 300 | 125 | 1 | 45 | 150 | 5 | 20 | 6 | —5 | | 300* | 5 | $Ccrbb$ 120pS | F-138 |
| 2SC 934 | " | " | 20 | 5 | 300 | 300 | 125 | 1 | 15 | 150 | 5 | 20 | 6 | —5 | | 300* | 5 | $Ccrbb'$ 120pS | F-138 |
| 2SC 935 | PA | Si.TMe | 300 | 5 | 2.5A | 50W (Tc = 25°C) | 150 | ICBX 1mA | 300 | 14 | 10 | 300 | 15 | —200 | | 5* | 75 | 20 | F-102 |
| 2SC 936 | " | " | 1000 | 5 | 1A | 22W | 125 | ICBX 1mA | 500 | 45 | 10 | 100 | 15 | —200 | | 7* | 35 | 25 | F-102 |
| 2SC 937 | " | " | 1200 | 6 | 2.5A | 22W (Tc = 25°C) | 125 | ICBX 1mA | 500 | 8 | 10 | 2.5A | 15 | —200 | | 4* | 100 | 15 | F-102 |
| 2SC 938 | RF | Si.E | 60 | 5 | 200 | 250 | 125 | 0.1 | 60 | 80 | 1 | 50 | 10 | —10 | | 90* | 7.5 | 40* | F-138 |
| 2SC 939 | PA.SW | Si.EMe | 150 | 7 | 5A | 50W (Tc = 25°C) | 150 | 2mA | 60 | 70 | 5 | 5A | 10 | —200 | | 20* | 150 | 20* | F-102 |
| 2SC 940 | " | " | 200 | 7 | 5A | 50W (Tc = 25°C) | 150 | 2mA | 90 | 70 | 5 | 5A | 10 | —200 | | 20* | 150 | 20* | F-102 |
| 2SC 941 | RF.LN | Si.EP | 35 | 4 | 20 | 200 | 125 | 0.1 | 20 | | 12 | 2 | 10 | —2 | | 120* | | $Ccrbb'$ 30pS | F-33 |
| 2SC 942 | RF | " | 20 | 3 | 20 | 300 /unit | 175 | 0.5 | 10 | | | | 6 | —2 | 70 | 700* | 1.3 | 80* | F-122 |
| 2SC 943 | " | " | 60 | 8 | 200 | 300 | 150 | 0.5 | 40 | 150 | 1 | 10 | 10 | —10 | | 220* | 4 | 40 | F-49B |
| 2SC 944 | RF.AF.SW | Si.E | 60 | 8 | 100 | 250 | 125 | 0.1 | 40 | 120 | 10 | 2 | 10 | —2 | | 250* | 2.2 | $Ccrbb'$ 40pS | F-138 |

**Pin Configurations are 1. Emitter, 2. Base, 3. Collector, 4. Shield, unless otherwise specified. (Outline Dimensions: mm)**

| TYPE NO. | USES | MATERIAL STRUCTURE | $V_{CBO}$ (V) | $V_{EBO}$ (V) | $I_C$ (mA) | $P_d$ (mW) | $T_j$ (°C) | $I_{CBO}$ (uA) | VALUE OF DC/PULSE BIAS $V_{CB}$(V) | $h_{FE}$ | $V_{CE}$(V) | $I_C$(mA) | $V_{CB}$(V) | $I_e$(mA) | hfe hfb* | fab fT (Mc) | Cob (pF) | $r_{bb'}$ $h_{ie}$(real)* (Ω) | CASE STYLE |
|---|---|---|---|---|---|---|---|---|---|---|---|---|---|---|---|---|---|---|---|
| 2SC 945 | RF.AF | Si.E | 50 | 5 | 100 | 250 | 125 | 0.1 | 40 | 150 | 6 | 1 | 6 | —1 | | 250* | 4.5 | 25* | F-138 |
| 2SC 946 | | | | | | | | | | | | | | | | | | | |
| 2SC 947 | RF.Conv. Mix.Osc.PA | Si.P | 25 | 3 | 15 | 150 | 175 | 100 | 25 | 20 | 10 | 2 | 10 | —3 | | 650* | $C_{re}$ 0.33pS | 20 | F-50C |
| 2SC 948 | RF | " | 25 | 3 | 15 | 150 | 175 | 100 | 25 | 24 | 10 | 3 | 10 | —3 | | 800 | $C_{re}$ 0.33pS | 30 | F-50C |
| 2SC 949 | RF.AF.LN | Si.EP | 30 | | 50 | 200 | 125 | 0.05 | 20 | 150 | 6 | 1 | 6 | —0.1 | | 40* | 6 | $C_{crbb'}$ 60pS | F-29 |
| 2SC 950 | RF.AF | " | 30 | | 100 | 300 | 125 | 0.1 | 20 | 100 | 6 | 1 | 10 | —2 | | 55* | 5 | $C_{crbb'}$ 40pS | F-29 |
| 2SC 951 | | | | | | | | | | | | | | | | | | | |
| 2SC 952 | RF | Si.EP | 90 | | 200 | 300 | 125 | 0.1 | 20 | 90 | 1 | 50 | 10 | —2 | | 40* | 5 | $C_{crbb'}$ 50pS | F-29 |
| 2SC 953 | " | " | 30 | | 200 | 600 | 125 | 0.5 | 20 | 100 | 1 | 100 | 10 | —5 | | 90* | 5 | $C_{crbb'}$ 50pS | F-31 |
| 2SC 954 | RF.PA | " | 60 | | 400 | 600 | 125 | 0.5 | 20 | 100 | 1 | 100 | 10 | —5 | | 90* | 5 | $C_{crbb'}$ 50pS | F-31 |
| 2SC 955 | RF | " | 20 | | 50 | 150 | 125 | 1 | 20 | 100 | 6 | 1 | 6 | —2 | | 150* | 2 | $C_{crbb'}$ 250pS | F-29 |
| 2SC 956 | RF.AF | " | 50 | 5 | 50 | 150 | 125 | 0.1 | 20 | 250 | 6 | 1 | 6 | —1 | | 200* | 2 | $C_{crbb'}$ 200pS | F-29 |
| 2SC 957 | RF | Si.DB | 30 | | 100 | 360 | 100 | 0.3 | 15 | 30 | 3 | 1 | 10 | —10 | | | 1.5 | $C_{crbb'}$ 10pS | F-206C |
| 2SC 958 | | | | | | | | | | | | | | | | | | | |
| 2SC 959 | PA | Si.EP | 120 | 5 | 700 | 0.7 | 150 | 3 | 80 | 100 | 5 | 200 | 5 | —150 | | 80* | 17 | 35 | F-84B |
| 2SC 960 | " | " | 120 | 5 | 700 | 1W | 150 | 3 | 80 | 80 | 5 | 300 | 10 | —100 | | 100* | 30 | 35* | F-97B |
| 2SC 961 | " | Si.TMe | 120 | 5 | 7A | 60W ($T_c$ = 25°C) | 150 | 100 | 30 | 60 | 4 | 1A | 5 | —500 | | 13* | 350 | 5 | F-102 |
| 2SC 962 | " | " | 100 | 5 | 7A | 60W ($T_c$ = 25°C) | 150 | 100 | 30 | 60 | 4 | 1A | 5 | —500 | | | | | F-102 |
| 2SC 963 | RF | Si.EP | 35 | 4 | 50 | 250 | 175 | 2 | 12 | 70 | 6 | 1 | 6 | —1 | 100 | 200* | 2 | 50* | F-55C |
| 2SC 964 | " | " | 35 | 4 | 50 | 250 | 175 | 2 | 12 | 100 | 6 | 1 | 6 | —1 | | 200* | 2 | 50* | F-55C |
| 2SC 965 | RF.SW | " | 45 | 4 | 100 | 250 | 175 | 0.5 | 12 | 130 | 6 | 1 | 6 | —1 | | 200* | 2 | 50* | F-55C |
| 2SC 966 | RF.AF.LN | " | 30 | 5 | 200 | 500 | 175 | 0.5 | 12 | 160 | 4 | 10 | 6 | —1 | 120 | 70* | 10 | 80 | F-55C |
| 2SC 967 | RF.AF.PA | " | 30 | 5 | 500 | 500 | 175 | 1 | 12 | 160 | 4 | 10 | 6 | —1 | 120 | 70* | 10 | 70 | F-55C |
| 2SC 968 | RF.PA | " | 50 | 5 | 500 | 500 | 175 | 1 | 12 | 160 | 4 | 10 | 6 | —1 | | 70* | 10 | 40 | F-55C |
| 2SC 969 | RF.AF.LN | " | 50 | | 200 | 500 | 175 | 0.1 | 12 | 160 | 4 | 10 | 6 | —1 | | 60* | 10 | 80 | F-55C |
| 2SC 970 | RF.SW | " | 50 | 7 | 500 | 500 | 175 | 0.5 | 12 | 160 | 4 | 10 | 6 | —1 | | 70* | 10 | 70 | F-55C |
| 2SC 971 | RF.PA | " | 50 | 5 | 500 | 1W | 175 | 1 | 12 | 160 | 4 | 10 | 6 | —1 | | 70* | 10 | 40 | F-90 |
| 2SC 972 | | | | | | | | | | | | | | | | | | | |
| 2SC 973 | PA | Si.EP | 40 | 4 | 500 | 7W ($T_c$ = 25°C) | 175 | 50 | 15 | 50 | 10 | 100 | | | | | | | F-126 |
| 2SC 974 | " | " | 35 | | 1A | 10W ($T_c$ = 25°C) | 200 | 100 | 15 | 50 | 10 | 100 | | | | | | | F-183 |
| 2SC 975 | " | " | 35 | 5 | 1.5A | 17W ($T_c$ = 25°C) | 175 | 200 | 15 | 50 | 10 | 100 | | | | | | | F-183 |
| 2SC 976 | " | " | 55 | 4 | 400 | 5W ($T_c$ = 25°C) | 175 | 100 | 30 | 50 | 28 | 20 | | | | | | | F-126 |
| 2SC 977 | " | " | 55 | 4 | 600 | 10W ($T_c$ = 25°C) | 175 | 300 | 30 | 50 | 28 | 50 | | | | | | | F-126 |
| 2SC 978 | " | " | 55 | 4.5 | 1.2A | 18W ($T_c$ = 25°C) | 175 | 500 | 30 | 50 | 28 | 50 | | | | | | | F-126 |
| 2SC 979 | RF | Si.E | 70 | 5 | 100 | 300 | 175 | 0.1 | 50 | 40-240 | 1 | 10 | 10 | —10 | | 250* | 3 | | F-49C |
| 2SC 980 | " | " | 70 | 5 | 100 | 200 | 125 | 1 | 50 | 70 | 1 | 10 | 10 | —10 | | 400* | 3 | 30 | F-33 |
| 2SC 981 | PA | " | 100 | 5 | 5A | 25W ($T_c$ = 25°C) | 150 | 10 | 40 | 70 | 1.5 | 5A | 5 | —500 | | 10* | 80 | 10 | F-99 |
| 2SC 982 | AF.SW | " | 30 | 10 | 300 | 300 | 125 | 0.1 | 30 | 5000 | 5 | 10 | 10 | —10 | | 100* | 6 | 100 | F-33 |
| 2SC 983 | " | Si.TP | 250 | 5 | 50 | 600 | 150 | 0.1 | 30 | 40-240 | 5 | 10 | 30 | —10 | | 120* | < 5.5 | 25 | F-131 |
| 2SC 984 | " | Si.EPa | 50 | 4 | 500 | 350 | 175 | 0.5 | 20 | 80 | 3 | 10 | 3 | —10 | | 230* | 5 | 24* | F-12A |
| 2SC 985 | RF.LN | " | 20 | 3 | 40 | 200 | 150 | 0.5 | 10 | 80 | 5 | 15 | 5 | —15 | | 3200* | 0.6 | $C_{crbb'}$ 1 pS | F-26 |
| 2SC 986 | RF | Si.E | 35 | 3 | 200 | 3.5W ($T_c$ = 25°C) | 200 | 1 | 20 | 100 | 15 | 70 | 15 | —70 | | 2500* | 1 | $C_{crbb'}$ 3 pS | F-187 |
| 2SC 987 | " | Si.EP | 20 | 3 | 30 | 150 | 150 | 0.5 | 10 | 80 | 10 | 10 | 10 | —10 | | 4500* | 0.35 | $C_{crbb'}$ 0.6pS | F-26 |
| 2SC 988 | " | " | 20 | 3 | 30 | 200 | 200 | 0.1 | 10 | 80 | 10 | 10 | 10 | —10 | | 3000* | 0.5 | 30* | F-50C |
| 2SC 989 | " | " | 20 | 3 | 50 | 300 | 200 | 0.5 | 10 | 80 | 1 | 30 | 3 | —15 | | 3000* | 0.9 | 30* | F-25 |
| 2SC 990 | PA | " | 50 | 4 | 2A | 24W ($T_c$ = 25°C) | 175 | 10 | 20 | 40 | 10 | 1A | 10 | —300 | | 400* | 25 | | F-116 |
| 2SC 991 | " | " | 36 | 4 | 400 | 600 | 175 | 1 | 15 | 30 | 3 | 100 | 10 | —50 | | 500* | 5 | 10 | F-84B |
| 2SC 992 | " | " | 36 | 4 | 600 | 600 | 175 | 1 | 15 | 30 | 3 | 100 | 10 | —50 | | 500* | 5 | 10 | F-84B |
| 2SC 993 | RF | " | 25 | | 200 | 200 | 175 | 0.05 | 10 | | | | 6 | —1 | 80 | 400* | 3.5 | 50* | F-46C |
| 2SC 994 | RF.PA | " | 36 | 3 | 100 | 600 | 175 | 1 | 15 | 20-400 | 3 | 100 | 10 | —10 | | 500* | 3.8 | | F-84B |
| 2SC 995 | " | Si.TP | 300 | 5 | 150 | 800 | 150 | 0.1 | 100 | 25-400 | 10 | 50 | 10 | —30 | | 100* | 4.2 | 10 | F-84B |
| 2SC 996 | " | " | 300 | 5 | 150 | 1.2W | 150 | 0.1 | 100 | 25-400 | 10 | 50 | 10 | —30 | | 100* | 4.2 | 10 | F-97B |
| 2SC 997 | RF | Si.P | 40 | | 25 | 150 | 150 | 0.025 | 10 | 70 | 10 | 4 | 10 | —4 | | 600* | 1.5 | | F-117C |
| 2SC 998 | PA | Si.EP | 40 | 4 | 400 | 600 | 175 | 1 | 15 | 20 | 5 | 50 | 5 | —50 | | 550* | 6.5 | | F-84B |
| 2SC 999 | RF.PA.SW | Si.TMe | 1500 | 5 | 1.5A | 50W ($T_c$ = 25°C) | 150 | 10 | 500 | 50 | 15 | 150 | 15 | —200 | | 1 | 70 | 10 | F-102 |
| 2SC 1000 | RF.LN | Si.E | 55 | 5 | 100 | 200 | 125 | 0.1 | 18 | 200-700 | 6 | 2 | 6 | —1 | 280 | 80* | 6 | 100 | F-33 |
| 2SC 1001 | RF.PA | Si.EP | 40 | 4 | 500 | 5W ($T_c$ = 25°C) | 175 | 1 | 15 | 20 | 5 | 100 | 10 | —50 | | 700* | 6.5 | 25* | F-84B |
| 2SC 1002 | " | " | 36 | 4 | 1A | 10W ($T_c$ = 25°C) | 175 | 20 | 15 | 60 | 2 | 200 | 12.6 | —100 | | 700* | 10 | 20* | F-84A |
| 2SC 1003 | " | " | 36 | 4 | 2A | 20W ($T_c$ = 25°C) | 175 | 50 | 15 | 50 | 2 | 400 | 12.6 | —200 | | 350* | 20 | 10* | F-111 |
| 2SC 1004 | PA | Si.TMe | 1100 | 5 | 500 | 50W ($T_c$ = 25°C) | 150 | 10 | 500 | 30-160 | 15 | 150 | 15 | —200 | | 5.5 | 40 | | F-102 |

**Pin Configurations are 1. Emitter, 2. Base, 3. Collector, 4. Shield, unless otherwise specified. (Outline Dimensions: mm)**

| TYPE NO. | USES | MATERIAL STRUCTURE | $V_{CBO}$ (V) | $V_{EBO}$ (V) | $I_C$ (mA) | $P_d$ (mW) | $T_j$ (°C) | $I_{CBO}$ (uA) | VALUE OF DC/PULSE | | | BIAS | | hfe hfb* | fab fT (Mc) | Cob (pF) | $r_{bb'}$ $h_{ie(real)}$* (Ω) | CASE STYLE |
|---|---|---|---|---|---|---|---|---|---|---|---|---|---|---|---|---|---|---|
| | | | | | | | | $V_{CB}$(V) | hFE | $V_{CE}$(V) | $I_C$(mA) | $V_{CB}$(V) | $I_E$(mA) | | | | | |
| 2SC 1004A | PA.SW | Si.TMe | 1500 | 5 | 500 | 50W (Tc 25°C) | 150 | 10 | 500 | 30-160 | 15 | 150 | 15 | —200 | | 5.5* | 40 | | F-102 |
| 2SC 1005 | PA | " | 1100 | 5 | 5A | 50W (Tc 25°C) | 150 | 10 | 500 | 12 | 15 | 4A | 15 | —500 | | 3* | 150 | 5 | F-102 |
| 2SC 1006 | RF.AF | Si.E | 50 | 5 | 30 | 300 | 150 | 0.05 | 30 | 600 | 3 | 1 | 3 | —1 | | 200* | 3 | 50 | F-49C |
| 2SC 1007 | RF.SW | Si.EP | 60 | 8 | 20 | 300 | 150 | 0.1 | 40 | 150 | 1 | 10 | 10 | —10 | | 220* | 3 | 30* | F-49C |
| 2SC 1008 | RF | Si.E | 80 | 8 | 700 | 800 | 150 | 0.1 | 60 | 160 | 2 | 50 | 10 | —50 | | * | 17 | 25* | F-84B |
| 2SC 1009 | RF.Conv. Mix.Osc.LN | " | 50 | 5 | 50 | 150 | 125 | 0.1 | 25 | 80 | 3 | 0.5 | 6 | —1 | | 250* | | $C_{crbb'}$ 25pS | F-176 |
| 2SC 1010 | AF.LN | " | 50 | 5 | 30 | 300 | 150 | 0.05 | 30 | 550 | 3 | 1 | 3 | —1 | | 120* | 3 | 50* | F-49C |
| 2SC 1011 | PA | Si.EP | 40 | 4 | 750 | 8.6W (Tc 25°C) | 175 | 100 | 15 | 50 | 10 | 100 | | | | | | | F-271 |
| 2SC 1012 | " | Si.TP | 165 | 5 | 60 | 2.5W (Tc = 25°C) | 175 | 2 | | 60 | 20 | 40 | 10 | —3 | 35 | 100* | | | 84B |
| 2SC 1013 | SW.P | Si.EP | 35 | 5 | 1.5A | 7W (Tc 25°C) | 150 | 1 | 25 | 80 | 4 | 500 | | | | | | | F-132 |
| 2SC 1014 | " | " | 50 | 5 | 1.5A | 7W (Tc = 25°C) | 150 | 1 | 25 | 70 | 4 | 500 | | | | | | | F-132 |
| 2SC 1015 | PA | " | 40 | 4.5 | 3A | 33W (Tc 25°C) | 175 | 500 | 15 | 50 | 10 | 100 | | | | | | | F-183 |
| 2SC 1016 | " | " | 35 | | 500 | 2W | 200 | 50 | 15 | 50 | 10 | 100 | | | | | | | F-186 |
| 2SC 1017 | " | " | 75 | 4 | 1A | 4W (Tc = 25°C) | 125 | 10 | 30 | 50 | 10 | 100 | | | | | | | F-132 |
| 2SC 1018 | " | " | 75 | 4 | 1A | 4W (Tc = 25°C) | 125 | 10 | 30 | 50 | 10 | 100 | | | | | | | F-132 |
| 2SC 1019 | " | " | 60 | | 4A | 40W (Tc = 25°C) | 175 | 1mA | 30 | 50 | 10 | 100 | | | | | | | F-188 |
| 2SC 1020 | " | " | 60 | | 8A | 70W (Tc = 25°C) | 175 | 2mA | 30 | 50 | 10 | 100 | | | | | | | F-188 |
| 2SC 1021 | " | " | 60 | 5 | 6A | 60W (Tc = 25°C) | 175 | 2mA | 30 | 50 | 10 | 100 | | | | | | | F-127 |
| 2SC 1022 | " | " | 60 | 5 | 6A | 60W (Tc = 25°C) | 175 | 2mA | 30 | 50 | 10 | 100 | | | | | | | F-127 |
| 2SC 1023 | RF.Conv. Mix.Osc. | Si.P | 25 | 3 | 25 | 150 | 125 | 2 | 12 | 40 | 6 | 1 | 6 | —2 | | 200* | 1.8 | 70* | F-138 |
| 2SC 1024 | | | | | | | | | | | | | | | | | | | |
| 2SC 1025 | | | | | | | | | | | | | | | | | | | |
| 2SC 1026 | RF.Conv. | " | 25 | 3 | 25 | 150 | 125 | 2 | 12 | 70 | 6 | 1 | 6 | —2 | | | 1.8 | 70* | F-138 |
| 2SC 1027 | | | | | | | | | | | | | | | | | | | |
| 2SC 1028 | | | | | | | | | | | | | | | | | | | |
| 2SC 1029 | | | | | | | | | | | | | | | | | | | |
| 2SC 1030 | PA | Si.TMe | 150 | 6 | 6A | 50W (Tc = 25°C) | 150 | 1mA | 30 | 80 | 5 | 1A | 5 | —1A | | 10* | 180 | 12* | F-102 |
| 2SC 1031 | SW | " | 300 | 6 | 2A | 30W (Tc = 25°C) | 175 | 5 | 150 | 220 | 10 | 500 | | | | | | | F-99 |
| 2SC 1032 | RF | Si.P | 25 | 3 | 25 | 150 | 125 | 2 | 12 | 70 | 6 | | 6 | —2 | | 200* | 1.8 | | F-138 |
| 2SC 1033 | RF.AF | Si.TP | 200 | 5 | 25 | 300 | 175 | 2 | 12 | 30 | 10 | 5 | 10 | —3 | 38 | 135* | 3.3 | $C_{crbb'}$ 60pS | F-49C |
| 2SC 1034 | PA.SW | Si.TMe | 1100 | 13 | 1A | 25W (Tc = 25°C) | 150 | 5mA | 800 | 18 | 3 | 750 | 10 | —200 | | 5* | 95 | $C_{crbb'}$ 220pS | F-100 |
| 2SC 1035 | LN | Si.TP | 30 | 3 | 20 | 150 | 150 | 1 | 25 | 100 | 6 | 1 | 6 | —3 | | 700* | 0.7 | $C_{crbb'}$ 2.5pS | F-205C |
| 2SC 1036 | RF | " | 30 | 3 | 20 | 150 | 150 | 1 | 25 | 100 | 6 | 1 | 6 | —3 | | 700* | 0.7 | $C_{crbb'}$ 2.5pS | F-205C |
| 2SC 1037 | PA | Si.EP | 60 | 4 | 4A | 50W (Tc = 25°C) | 175 | 1mA | 30 | 50 | 10 | 1A | | | | | | | F-111 |
| 2SC 1038 | " | " | 40 | 3 | 150 | 3.75W (Tc = 25°C) | 175 | 50 | 20 | 50 | 10 | 70 | 10 | —70 | | 2000* | 2.5 | | F-129 |
| 2SC 1039 | " | " | 40 | 3 | 250 | 7.5W (Tc = 25°C) | 175 | 100 | 20 | 50 | 10 | 100 | 10 | —100 | | 2000* | 4 | | F-129 |
| 2SC 1040 | " | Si.E | 45 | 4 | 1.2A | 15W (Tc = 25°C) | 175 | 1mA | 30 | 50 | 10 | 1A | | | | | | | |
| 2SC 1041 | PA | Si.EP | 40 | 3 | 150 | 3.75W (Tc = 25°C) | 175 | 50 | 20 | 50 | 10 | 70 | 10 | —70 | | 2000* | 2.5 | | F-129 |
| 2SC 1042 | " | " | 40 | 3 | 250 | 7.5W (Tc = 25°C) | 175 | 100 | 20 | 50 | 10 | 100 | 10 | —100 | | 2000* | 4 | | F-129 |
| 2SC 1043 | RF.LN | Si.E | 45 | 3 | 300 | 6W (Tc = 25°C) | 175 | 0.1 | 30 | 80 | 10 | 100 | 15 | —50 | | 2200* | 2.5 | | F-129 |
| 2SC 1044 | RF | " | 45 | 4 | 30 | 250 | 200 | 50nA | 30 | 100 | 6 | 6 | 6 | —6 | | 1000* | NF = 3dB (f = 200MHz) | | F-50C |
| 2SC 1045 | | | | | | | | | | | | | | | | | | | |
| 2SC 1046 | PA | Si.TMe | 1000 | 6 | 3A | 25W (Tc = 25°C) | 150 | 100 | 100 | 8 | 5 | 2A | 5 | —100 | | 4* | 150 | 35 | F-102 |
| 2SC 1047 | RF | Si.EP | 30 | 3 | 15 | 150 | 125 | 10 | 30 | 120 | 6 | 1 | 6 | —1 | | 650* | $C_{re}$ 0.88pF | 30 | F-138 |
| 2SC 1048 | " | Si.Me | 200 | 6 | 50 | 600 | 150 | 10 | 100 | 90 | 10 | 25 | 10 | —10 | | 120* | 3.5 | | F-84B |
| 2SC 1049 | | | | | | | | | | | | | | | | | | | |
| 2SC 1050 | PA | Si.TMe | 300 | 6 | 1A | 40W (Tc = 25°C) | 150 | 1mA | 150 | 90 | 5 | 300 | 5 | —100 | | 8* | 50 | 35 | F-102 |
| 2SC 1051 | " | Si.T | 150 | 6 | 7A | 60W (Tc = 25°C) | 150 | 1mA | 30 | 90 | 5 | 1A | 5 | —1A | | 8* | 230 | 20* | F-102 |
| 2SC 1052 | SW | Si.EP | 75 | 5 | 1A | 800 | 175 | 0.5 | 50 | 40 | 1 | 500 | | | | | | | F-84B |
| 2SC 1053 | " | " | 75 | 5 | 700 | 800 | 175 | 0.2 | 40 | 50 | 1 | 500 | | | | | | | F-84B |
| 2SC 1054 | RF.LN | " | 35 | 3 | 50 | 180 | 175 | 0.5 | 12 | 60 | 6 | 1 | 6 | —2 | | 700* | 1 | 30* | F-205C |
| 2SC 1055 | PA.SW | Si.TMe | 130 | 6 | 7A | 25W (Tc = 25°C) | 175 | 200 | 30 | 60 | 4 | 5A | 5 | —1A | | 25* | 200 | 12* | F-99 |
| 2SC 1056 | RF | Si.PaMe | 260 | 5 | 100 | 750 | 175 | 1 | 100 | 150 | 5 | 3 | 20 | —20 | | 180* | 7 | | F-84B |
| 2SC 1057 | PA | Si.EP | 50 | 3.5 | 1A | 12W (Tc = 25°C) | 175 | 500 | 20 | 50 | 5 | 500 | | | | | | | F-13 |
| 2SC 1058 | " | " | 50 | 3.5 | 2A | 20W (Tc = 25°C) | 175 | 1mA | 20 | 50 | 5 | 1A | | | | | | | F-133 |
| 2SC 1059 | " | " | 300 | 4 | 150 | 8W (Tc 25°C) | 150 | | | 60 | 10 | 50 | | | | | | | F-153 |
| 2SC 1060 | PA | Si.T | 50 | 4 | 3A | 25W (Tc = 25°C) | 150 | 100 | 20 | 100 | 4 | 1A | 4 | —500 | | 8* | 100 | 6* | F-158 |
| 2SC 1061 | " | " | 50 | 4 | 3A | 25W (Tc = 25°C) | 150 | 100 | 20 | 100 | 4 | 1A | 4 | —500 | | 8* | 100 | 6* | F-159 |
| 2SC 1062 | SW | Si.TMe | 200 | 4 | 100 | 700 | 175 | 2 | 100 | 60 | 2 | 50 | | | | | | | F-84B |
| 2SC 1063 | SW | Si.DB | 10 | 5 | 1A | 750 | 150 | 1 | 10 | 60 | 1 | 65 | | | | | | | F-84C |

**Pin Configurations are 1. Emitter, 2. Base, 3. Collector, 4. Shield, unless otherwise specified. (Outline Dimensions: mm)**

| TYPE NO. | USES | MATERIAL STRUCTURE | $V_{CBO}$ (V) | $V_{EBO}$ (V) | $I_C$ (mA) | Pd (mW) | Tj (°C) | $I_{CBO}$ (uA) | VALUE OF DC/PULSE $V_{CB}$(V) | hFE | $V_{CE}$(V) | $I_C$(mA) | BIAS $V_{CB}$(V) | $I_E$(mA) | hfe hfb* | fab fT (Mc) | Cob (pF) | $r_{bb'}$ $h_{ie(real)}$* (Ω) | CASE STYLE |
|---|---|---|---|---|---|---|---|---|---|---|---|---|---|---|---|---|---|---|---|
| 2SC 1064 | SW | Si.EP | 60 | 5 | 1A | 800 | 175 | 0.5 | 40 | 45 | 1 | 500 | | | | | | | F-84A |
| 2SC 1065 | " | " | 90 | 5 | 1A | 800 | 175 | 0.5 | 40 | 40 | 3 | 500 | | | | 400* | | | F-84B |
| 2SC 1066 | RF | " | 20 | 3 | 25 | 200 | 175 | 0.1 | 12 | | | | 6 | −2 | 120 | 800* | 1.4 | 80* | F-46C |
| 2SC 1067 | " | " | 35 | 3 | 50 | 180 | 175 | 0.5 | 12 | 60 | 6 | 1 | 6 | −2 | | 500* | 1 | 30* | F-205C |
| 2SC 1068 | " | " | 25 | 3 | 150 | 600 | 175 | 0.5 | 20 | 100 | 10 | 40 | 10 | −40 | | 1800* | 2 | 40* | F-84B |
| 2SC 1069 | SW | " | 100 | 6 | 1A | 800 | 175 | 0.5 | 70 | 40 | 3 | 500 | 10 | −10 | | 400* | < 9 | | F-84B |
| 2SC 1070 | RF | " | 30 | 4 | 20 | 150 | 150 | 0.1 | 25 | 100 | 10 | 3 | 10 | −3 | | 900* | 0.5 | $C_{crbb'}$ 3 pS | F-210 |
| 2SC 1071 | SW | " | 30 | 5 | 200 | 300 | 175 | 0.2 | 20 | 80 | 1 | 30 | | | | | | | F-49C |
| 2SC 1072 | " | " | 60 | 5 | 700 | 800 | 175 | 0.3 | 40 | 50 | 1 | 500 | | | | | | | F-123 |
| 2SC 1072A | " | " | 66 | 5 | 700 | 800 | 175 | 0.3 | 40 | 50 | 1 | 500 | | | | | | | F-123 |
| 2SC 1073 | PA | " | 36 | 4 | 500 | 2W (Tc = 25°C) | 175 | 5 | 20 | 70 | 13.5 | 100 | | | | | | | F-142 |
| 2SC 1074 | " | " | 36 | 4 | 1A | 10W (Tc = 25°C) | 175 | 5 | 20 | 50 | 13.5 | 200 | | | | | | | F-142 |
| 2SC 1075 | " | " | 36 | 4 | 2A | 20W (Tc = 25°C) | 175 | 10 | 20 | 60 | 13.5 | 400 | | | | | | | F-142 |
| 2SC 1076 | " | " | 36 | 4 | 3A | 30W (Tc = 25°C) | 175 | 30 | 20 | 50 | 13.5 | 600 | | | | | | | F-142 |
| 2SC 1077 | " | " | 65 | 4 | 5A | 50W (Tc = 25°C) | 175 | 10mA | 20 | > 20 | 10 | 1A | 20 | −200 | | 150* | 45 | | F-141 |
| 2SC 1078 | " | Si.TMe | 700 | 5 | 500 | 20W (Tc = 25°C) | 150 | 10 | 500 | 70 | 15 | 150 | 15 | −150 | | 2* | 40 | 10 | F-99 |
| 2SC 1079 | " | " | 150 | 5 | 12A | 100W (Tc = 25°C) | 150 | 100 | 50 | 40-140 | 5 | 2A | 5 | −2A | | 4* | 350 | | F-102 |
| 2SC 1080 | " | " | 110 | 5 | 12A | 100W (Tc = 25°C) | 150 | 100 | 30 | 40-140 | 5 | 2A | 5 | −2A | | 4* | 350 | | F-102 |
| 2SC 1081 | " | " | 40 | 4 | 2.5A | 30W (Tc = 25°C) | 175 | 1mA | 30 | 70 | 10 | 1A | 10 | −300 | | 400* | | | F-115 |
| 2SC 1082 | " | Si.EP | 50 | 3.5 | 500 | 7W (Tc = 25°C) | 175 | 100 | 20 | 50 | 5 | 200 | 12 | −100 | | 1000* | 5 | | F-192 |
| 2SC 1083 | " | " | 40 | 3.5 | 500 | 3W (Tc = 25°C) | 175 | 100 | 20 | 80 | 5 | 200 | 12 | −100 | | 1600* | 4 | | F-84B |
| 2SC 1084 | RF.AF | " | 35 | 4 | 50 | 250 | 175 | 0.5 | 12 | 300 | 6 | 1 | 6 | −1 | | 300* | 2 | 50* | F-55C |
| 2SC 1085 | RF.LN | Si.DB | 30 | 5 | 100 | 200 | 125 | 0.1 | 30 | 160 | 6 | 2 | 6 | −1 | | 230* | 1.8 | 100* | F-137 |
| 2SC 1086 | PA.SW | Si.TMe | 1000 | 14 | 4A | 125W (Tc = 25°C) | 120 | 2mA | 800 | 12 | 3 | 2A | 10 | −500 | | 5* | 175 | $C_{crbb'}$ 450pS | F-102 |
| 2SC 1087 | | | | | | | | | | | | | | | | | | | |
| 2SC 1088 | PA | Si.TP | 300 | 5 | 100 | 12.5W (Tc = 25°C) | 150 | 3 | 300 | 70 | 10 | 50 | 50 | −20 | | 40* | 5 | $C_{crbb'}$ 20pS | F-180 |
| 2SC 1089 | " | " | 300 | 5 | 100 | 12.5W (Tc = 25°C) | 150 | 3 | 300 | 70 | 10 | 50 | 50 | −20 | | 50* | 3 | $C_{crbb'}$ 20pS | F-180 |
| 2SC 1090 | RF | Si.EP | 20 | 3 | 50 | 300 | 200 | 0.5 | 10 | 80 | 1 | 30 | 3 | −15 | | 3000* | 0.9 | 30* | F-130 |
| 2SC 1091 | | | | | | | | | | | | | | | | | | | |
| 2SC 1092 | | | | | | | | | | | | | | | | | | | |
| 2SC 1093 | | | | | | | | | | | | | | | | | | | |
| 2SC 1094 | | | | | | | | | | | | | | | | | | | |
| 2SC 1095 | | | | | | | | | | | | | | | | | | | |
| 2SC 1096 | PA | Si.E | 40 | 5 | 2A | 10W (Tc = 25°C) | 150 | 100 | 30 | 80 | 5 | 1A | 5 | −150 | | 60* | | | F-167 |
| 2SC 1097 | | | | | | | | | | | | | | | | | | | |
| 2SC 1098 | PA | Si.E | 70 | 5 | 1A | 10W (Tc = 25°C) | 150 | 100 | 40 | 80 | 5 | 500 | 5 | −150 | | 40* | | | F-167 |
| 2SC 1099 | SW | Si.TMe | 1200 | 7 | 4.5A | 50W (Tc = 25°C) | 150 | 1mA | 1000 | 25 | 15 | 3A | | | | | | | F-102 |
| 2SC 1100 | " | " | 1100 | 7 | 4.5A | 50W (Tc = 25°C) | 150 | 1mA | 1000 | 25 | 15 | 3A | | | | | | | F-102 |
| 2SC 1101 | " | " | 1100 | 5 | 1A | 50W (Tc = 25°C) | 150 | 1mA | 1000 | 60 | 15 | 500 | | | | | | | F-102 |
| 2SC 1102 | PA.SW | " | 300 | 7 | 100 | 11W (Tc = 25°C) | 150 | 100 | 300 | 90 | 10 | 10 | 30 | −10 | | 80* | 3.5 | 10 | F-134 |
| 2SC 1103 | PA | Si.TP | 250 | 7 | 100 | 800 | 150 | 100 | 250 | 80 | 10 | 10 | 30 | −10 | | 80* | 4.5 | 30 | F-84B |
| 2SC 1104 | SW | " | 300 | 5 | 1.5A | 20W (Tc = 25°C) | 150 | 100 | 200 | 80 | 10 | 400 | | | | | | | F-134 |
| 2SC 1105 | PA | " | 300 | 5 | 100 | 15W (Tc = 25°C) | 150 | 100 | 200 | 80 | 10 | 50 | 50 | −20 | | 20* | 5 | 30 | F-134 |
| 2SC 1106 | SW | " | 350 | 5 | 3A | 80W (Tc = 25°C) | 150 | 1mA | 200 | 90 | 15 | 500 | | | | | | | F-102 |
| 2SC 1107 | PA | Si.TMe | 80 | | 4A | 25W (Tc = 25°C) | 150 | 100 | 80 | 120 | 4 | 1A | 10 | −200 | | 10* | 25 | 26* | F-211 |
| 2SC 1108 | " | " | 100 | | 4A | 25W (Tc = 25°C) | 150 | 100 | 100 | 120 | 4 | 1A | 10 | −200 | | 10* | 25 | 26* | F-211 |
| 2SC 1109 | " | " | 80 | | 4A | 25W (Tc = 25°C) | 150 | 100 | 80 | 120 | 4 | 1A | 10 | −200 | | 10* | 25 | 26* | F-212 |
| 2SC 1110 | " | " | 100 | | 4A | 25W (Tc = 25°C) | 150 | 100 | 100 | 120 | 4 | 1A | 10 | −200 | | 10* | 25 | 26* | F-212 |
| 2SC 1111 | " | " | 140 | 6 | 6A | 50W (Tc = 25°C) | 150 | 1mA | 140 | 60 | 4 | 3A | 12 | −500 | | 10* | 115 | 12* | F-102 |
| 2SC 1112 | " | " | 160 | 6 | 6A | 50W (Tc = 25°C) | 150 | 1mA | 160 | 60 | 4 | 3A | 12 | −500 | | 10* | 115 | 12* | F-102 |
| 2SC 1113 | PA.SW | " | 120 | 10 | 6A | 40W (Tc = 25°C) | 150 | 10 | 120 | 60 | 4 | 5A | 12 | −500 | | 10* | | | F-99 |
| 2SC 1114 | PA | " | 300 | 7 | 4A | 100W (Tc = 25°C) | 150 | 1mA | 300 | 60 | 4 | 1A | 12 | −100 | | 10* | 50 | 26* | F-102 |
| 2SC 1115 | " | " | 140 | 6 | 10A | 100W (Tc = 25°C) | 150 | 1mA | 140 | 60 | 4 | 3A | 12 | −500 | | 10* | 165 | 13* | F-102 |
| 2SC 1116 | " | " | 180 | 6 | 10A | 100W (Tc = 25°C) | 150 | 1mA | 180 | 60 | 4 | 3A | 12 | −500 | | 10* | 165 | 13* | F-102 |
| 2SC 1117 | RF | Si.P | 20 | 3 | 20 | 150 | 150 | 1 | 15 | 150 | 10 | 2 | | | | 850* | 0.35 | | F-56C |
| 2SC 1118 | " | Si.E | 45 | 4 | 2A | 27W (Tc = 25°C) | 175 | 2 | 30 | 50 | 10 | 1A | | | | | | | F-184 |
| 2SC 1119 | RF | Si.Ep | 20 | 3 | 30 | 250 | 175 | 0.1 | 10 | 100 | 10 | 10 | 10 | −10 | | 4500* | 0.5 | 20* | F-130 |
| 2SC 1120 | PA | " | 35 | 4 | 1.5A | 10W (Tc = 25°C) | 175 | 5 | 15 | 40 | 5 | 500 | 10 | −100 | | 700* | 8 | 20* | F-135 |
| 2SC 1121 | " | " | 35 | 4 | 3A | 20W (Tc = 25°C) | 175 | 25 | 15 | 40 | 5 | 1A | 10 | −20 | | 500* | 20 | 10* | F-135 |
| 2SC 1122 | " | " | 35 | 4 | 4.5A | 30W (Tc = 25°C) | 175 | 100 | 15 | 40 | 5 | 1.5A | 10 | −100 | | 400 | 20 | | F-135 |

**Pin Configurations are 1. Emitter, 2. Base, 3. Collector, 4. Shield, unless otherwise specified. (Outline Dimensions: mm)**

| TYPE NO. | USES | MATERIAL STRUCTURE | $V_{CBO}$ (V) | $V_{EBO}$ (V) | $I_C$ (mA) | Pd (mW) | Tj (°C) | $I_{CBO}$ (uA) | VALUE OF DC/PULSE | | | | BIAS | | hfe hfb* | fab fT (Mc) | Cob (pF) | $r_{bb'}$ $h_{ie(real)}$* (Ω) | CASE STYLE |
|---|---|---|---|---|---|---|---|---|---|---|---|---|---|---|---|---|---|---|---|
| | | | | | | | | | $V_{CB}$(V) | hFE | $V_{CE}$(V) | $I_C$(mA) | $V_{CB}$(V) | $I_e$(mA) | | | | | |
| 2SC 1123 | Mix | Si.DB | 35 | 3 | 100 | 300 | 100 | 0.2 | 15 | 70 | 3 | 1 | 10 | −5 | | 550* | 2.1 | $C_{rbb'}$ 8 pS | F-208 |
| 2SC 1124 | PA | Si.PaMe | 140 | 6 | 1A | 950 | 120 | 1 | 50 | 160 | 2 | 100 | 10 | −10 | | 120* | 6.5 | $C_{rbb'}$ 150pS | F-174 |
| 2SC 1125 | | | | | | | | | | | | | | | | | | | |
| 2SC 1126 | RF. Osc | Si.DB | 30 | 3 | 50 | 250 | 100 | 0.2 | 15 | 50 | 3 | 1 | 10 | −8 | | 550* | 1.5 | $C_{rbb'}$ 16pS | F-208 |
| 2SC 1127 | RF | Si.PaMe | 180 | 8 | 100 | 950 | 120 | 1 | 100 | 60 | 5 | 3 | 10 | −2 | | 30* | 2.5 | $C_{rbb'}$ 80pS | F-174 |
| 2SC 1128 | " | " | 35 | 3 | 100 | 300 | 100 | 0.3 | 15 | 70 | 3 | 1 | 10 | −10 | | 550* | 1.6 | $C_{rbb'}$ 7 pS | F-208 |
| 2SC 1129 | " | " | 35 | 3 | 30 | 300 | 100 | 0.2 | 15 | 70 | 10 | 4 | 10 | −4 | | 400* | 1 | $C_{rbb'}$ 12 pS | F-208 |
| 2SC 1130 | PA.SW | SiT | 800 | 6 | 3.5A | 80W (Tc = 25°C) | 150 | 2mA | 800 | 15 | 5 | 2A | 10 | −1A | | 4 | 150 | 10 | F-102 |
| 2SC 1131 | " | " | 600 | 6 | 3.5A | 80W (Tc = 25°C) | 150 | 2mA | 600 | 15 | 5 | 2A | 10 | −1A | | 4* | 150 | 10 | F-102 |
| 2SC 1132 | " | " | 1200 | 6 | 2.5A | 30W (Tc = 25°C) | 125 | 1mA | 1200 | 15 | 5 | 0.5A | 10 | −1A | | 3.5* | 110 | 10 | F-102 |
| 2SC 1133 | | | | | | | | | | | | | | | | | | | |
| 2SC 1134 | | | | | | | | | | | | | | | | | | | |
| 2SC 1135 | | | | | | | | | | | | | | | | | | | |
| 2SC 1136 | PA.SW | Si.T | 200 | 6 | 30A | 200W (Tc = 25°C) | 150 | 5mA | 200 | 20 | 5 | 10A | 10 | −10A | | 9* | 650 | 5 | F-154 |
| 2SC 1137 | | | | | | | | | | | | | | | | | | | |
| 2SC 1138 | PA.SW | Si.T | 800 | 6 | 30A | 200W (Tc = 25°C) | 150 | 5mA | 800 | 20 | 15 | 10A | 10 | −10A | | 9* | 650 | 5 | F-154 |
| 2SC 1139 | " | " | 600 | 6 | 30A | 200W (Tc = 25°C) | 150 | 5mA | 600 | 20 | 5 | 10A | 10 | −1A | | 9* | 650 | 5 | F-154 |
| 2SC 1140 | " | " | 800 | 6 | 15A | 150W (Tc = 25°C) | 150 | 3mA | 800 | 15 | 5 | 7.5A | 10 | −1A | | 10* | 350 | 10 | F-102 |
| 2SC 1141 | " | " | 600 | 6 | 15A | 150W (Tc = 25°C) | 150 | 3mA | 600 | 15 | 5 | 7.5A | 10 | −1A | | 10* | 350 | 10 | F-102 |
| 2SC 1142 | " | " | 800 | 6 | 10A | 125W (Tc = 25°C) | 150 | 3mA | 800 | 15 | 5 | 5A | 10 | −1A | | 4* | 270 | 10 | F-102 |
| 2SC 1143 | " | " | 600 | 6 | 10A | 125W (Tc = 25°C) | 150 | 3mA | 600 | 15 | 5 | 5A | 10 | −1A | | 4* | 270 | 10 | F-102 |
| 2SC 1144 | | | | | | | | | | | | | | | | | | | |
| 2SC 1145 | | | | | | | | | | | | | | | | | | | |
| 2SC 1146 | | | | | | | | | | | | | | | | | | | |
| 2SC 1147 | | | | | | | | | | | | | | | | | | | |
| 2SC 1148 | | | | | | | | | | | | | | | | | | | |
| 2SC 1149 | | | | | | | | | | | | | | | | | | | |
| 2SC 1150 | SW | Si.EP | 60 | 5 | 1A | 800 | 175 | 0.5 | 40 | 50 | 1 | 500 | | | | | | | F-123 |
| 2SC 1151 | RF.PA | Si.EMe | 900 | 5 | 1A | 50W (Tc = 25°C) | 125 | 200 | 500 | 60 | 10 | 150 | 15 | −200 | | 5* | 65 | 25 | F-102 |
| 2SC 1152 | " | " | 300 | 5 | 2.5A | 50W (Tc = 25°C) | 125 | 200 | 300 | 60 | 10 | 500 | 15 | −200 | | 5* | 65 | 25 | F-102 |
| 2SC 1153 | SW | Si.EMe | 1200 | 6 | 2.5A | 50W (Tc = 25°C) | 125 | 1mA | 1200 | 20 | 10 | 2.5A | | | | | | | F-102 |
| 2SC 1154 | " | " | 1200 | 6 | 3.5A | 50W (Tc = 25°C) | 125 | 1mA | 1200 | 20 | 10 | 3.5A | | | | | | | F-102 |
| 2SC 1155 | SW.PA | Si.EP | 70 | 5 | 800 | 7W (Tc = 25°C | 150 | 10 | 25 | 100 | 4 | 300 | | | | | | | F-132 |
| 2SC 1156 | " | " | 90 | 5 | 800 | 7W (Tc = 25°C) | 150 | 10 | 25 | 100 | 4 | 300 | | | | | | | F-132 |
| 2SC 1157 | " | " | 110 | 5 | 800 | 7W (Tc = 25°C) | 150 | 10 | 25 | 100 | 4 | 300 | | | | | | | F-132 |
| 2SC 1158 | Osc | " | 35 | 4 | 20 | 150 | 150 | 1 | 15 | 80 | 10 | 5 | 10 | −5 | | 1100* | 0.8 | 6pS | F-139 |
| 2SC 1159 | " | " | 35 | 4 | 20 | 150 | 150 | 1 | 15 | 80 | 10 | 5 | 10 | −5 | | 1100* | 0.8 | 6pS | F-139 |
| 2SC 1160 | PA | " | 200 | 6 | 1A | 15W (Tc = 25°C) | 150 | 5 | 200 | 80 | 5 | 200 | 10 | −200 | | 20* | 30 | 40* | F-134 |
| 2SC 1161 | " | " | 200 | 6 | 1A | 15W (Tc = 25°C) | 150 | 5 | 200 | 80 | 5 | 200 | 10 | −200 | | 20* | 30 | 40* | F-134 |
| 2SC 1162 | RF.PA | " | 35 | 5 | 1.5A | 10W (Tc = 25°C) | 150 | 20 | 35 | 130 | 2 | 500 | 2 | −200 | | 180* | 30 | 9.5* | F-160 |
| | | | | | | | | | | | | | | | | | | | |
| 2SC 1163 | PA | Si.P | 300 | 3 | 100 | 20.8W (Tc = 25°C) | 150 | 100 | 300 | 70 | 10 | 50 | 10 | −20 | | 55* | 8 | $C_{crbu}$ 6 pS | F-133 |
| 2SC 1164 | RF | Si.EP | 40 | 3 | 300 | 600 | 150 | 0.3 | 20 | 25-90 | 10 | 50 | 20 | −50 | | 1400* | 2.2 | 10 | F-85B |
| 2SC 1165 | PA | " | 40 | 4 | 500 | 700 | 175 | 1 | 15 | >20 | 5 | 100 | 10 | −50 | | 600* | 6.5 | 25* | F-84B |
| 2SC 1166 | " | Si.E | 70 | 5 | 200 | 600 | 150 | 0.1 | 20 | 100 | 2 | 50 | 10 | −10 | | 120* | 6 | 10 | F-131 |
| 2SC 1167 | " | Si.TMe | 1200 | 5 | 1.5A | 50W (Tc = 25°C) | 150 | 10 | 500 | >10 | 10 | 500 | 15 | −200 | | >2 | | | F-102 |
| 2SC 1168 | " | Si.T | 300 | 5 | 150 | 12.5W (Tc = 25°C) | 150 | 0.1 | 100 | 25-240 | 10 | 50 | 10 | −30 | | 100* | 5 | 10 | F-99 |
| 2SC 1169 | RF.Conv | Si.EP | 40 | 4 | 1A | 800 | 175 | 1 | 15 | >20 | 5 | 100 | 10 | −50 | | 600* | 6.5 | 25 | F-97B |
| 2SC 1170 | PA | Si.TMe | 1200 | 5 | 3.5A | 50W (Tc = 25°C) | 150 | 10 | 500 | 12 | 10 | 3A | 10 | −0.5A | | 4* | 80 | 10 | F-102 |
| 2SC 1170A | " | " | 1400 | 5 | 3.5A | 50W (Tc = 25°C) | 150 | 10 | 500 | 12 | 10 | 3A | 10 | −0.5A | | 4* | 80 | 10 | F-102 |
| 2SC 1171 | " | " | 1100 | 5 | 1A | 50W (Tc = 25°C) | 150 | 10 | 500 | 30-160 | 15 | 150 | 15 | −200 | | >0.5 | 70 | | F-102 |
| 2SC 1172 | " | " | 1500 | 5 | 5A | 50W (Tc = 25°C) | 150 | 10 | 500 | 20 | 10 | 2A | 10 | −500 | | 5* | 80 | 10 | F-102 |
| 2SC 1173 | RF.PA | Si.E | 30 | 5 | 3A | 10W (Tc = 25°C) | 150 | 1 | 20 | 40-400 | 2 | 500 | 2 | −500 | | 100* | 35 | | F-119 |
| 2SC 1174 | PA | Si.TMe | 1200 | 6 | 3.5A | 50W (Tc = 25°C) | 150 | $I_{CBX}$ 1mA | 1200 | 8 | 10 | 3.5A | 15 | −200 | | 4* | 120 | 10 | F-102 |
| 2SC 1175 | RF | Si.TP | 50 | 4 | 200 | 300 | 125 | 10 | 40 | 100 | 6 | 50 | 6 | −10 | | 170* | 5 | | F-138 |
| 2SC 1176 | PA | Si.EP | 40 | 4.5 | 1A | 15W (Tc = 25°C) | 175 | 100 | 15 | 50 | 10 | 100 | | | | | | | F-113 |
| 2SC 1177 | " | " | 40 | 4.5 | 2.5A | 25W (Tc = 25°C) | 175 | 1mA | 15 | 30 | 10 | 100 | | | | | | | F-113 |
| 2SC 1178 | | | | | | | | | | | | | | | | | | | |
| 2SC 1179 | | | | | | | | | | | | | | | | | | | |
| 2SC 1180 | RF | Si.TP | 30 | 3 | 20 | 150 | 150 | 1 | 25 | 100 | 6 | 1 | 10 | −2 | | 800* | $C_{re}$ 0.3 | $C_{crbb}$ 3 pS | F-50C |

**Pin Configurations are 1. Emitter, 2. Base, 3. Collector, 4. Shield, unless otherwise specified. (Outline Dimensions: mm)**

| TYPE NO. | USES | MATERIAL STRUCTURE | $V_{CBO}$ (V) | $V_{EBO}$ (V) | Ic (mA) | Pd (mW) | Tj (°C) | $I_{CBO}$ (uA) | VALUE OF DC/PULSE | | | | BIAS | | hfe hfb* | fab fT (Mc) | Cob (pF) | $r_{bb'}$ $h_{ie(real)}$* (Ω) | CASE STYLE |
|---|---|---|---|---|---|---|---|---|---|---|---|---|---|---|---|---|---|---|---|
| | | | | | | | | | $V_{CB}$(V) | hFE | $V_{CE}$(V) | $I_C$(mA) | $V_{CB}$(V) | $I_E$(mA) | | | | | |
| 2SC 1181 | | | | | | | | | | | | | | | | | | | |
| 2SC 1182 | | | | | | | | | | | | | | | | | | | |
| 2SC 1183 | | | | | | | | | | | | | | | | | | | |
| 2SC 1184 | SW | SiTMe | 900 | 5 | 1A | 50W (Tc = 25°C) | 150 | 500 | 800 | 60 | 10 | 200 | | | | | | | F-102 |
| 2SC 1185 | " | " | 300 | 5 | 1.5A | 50W (Tc = 25°C) | 150 | 100 | 200 | 90 | 10 | 400 | | | | | | | F-102 |
| 2SC 1186 | | | | | | | | | | | | | | | | | | | |
| 2SC 1187 | RF | Si.P | 40 | 4 | 25 | 250 | 125 | 0.1 | 20 | 90 | 10 | 3 | 10 | —3 | | 600* | 1 | Ccrbb' 12pS | F-138C |
| 2SC 1188 | " | Si.E | 40 | 4 | 30 | 250 | 125 | 0.1 | 20 | 100 | 10 | 10 | 10 | —10 | | 850* | 1.3 | Ccrbb' 9 pS | F-138C |
| 2SC 1189 | " | " | 50 | 4 | 30 | 250 | 125 | 0.1 | 20 | 100 | 10 | 10 | 10 | —10 | | 850* | 1.3 | Ccrbb' 9 pS | F-138C |
| 2SC 1190 | PA | Si.EP | 36 | 4 | 2.5A | 30W (Tc = 25°C) | 175 | 100 | 20 | 50 | 13.5 | 400 | | | | 600* | 17 | | F-142 |
| 2SC 1191 | " | " | 36 | 4 | 3.5A | 45W (Tc = 25°C) | 175 | 0.5mA | 20 | 50 | 13.5 | 800 | | | | 50 | | | F-143 |
| 2SC 1192 | " | " | 36 | 4 | 5A | 60W (Tc = 25°C) | 175 | 1mA | 20 | 60 | 13.5 | 1A | | | | 350* | 100 | | F-143 |
| 2SC 1193 | LN | " | 20 | 2 | 30 | 200 | 175 | 0.1 | 10 | 70 | 10 | 10 | 10 | —10 | | 4500* | 0.8 | 20* | F-140 |
| 2SC 1194 | | | | | | | | | | | | | | | | | | | |
| 2SC 1195 | RF.PA | Si.TMe | 200 | 5 | 2.5A | 100W (Tc = 25°C) | 150 | 10 | 200 | 30-150 | 5 | 1A | 10 | —100 | | 10* | 80 | 25 | F-102 |
| 2SC 1196 | PA | Si.EP | 60 | 4.5 | 750 | 10W (Tc = 25°C) | 175 | 5 | 15 | 50 | 10 | 1A | 10 | —150 | | 800* | 5 | | F-135 |
| 2SC 1197 | " | " | 60 | 4.5 | 2A | 30W (Tc = 25°C) | 175 | 10 | 15 | 55 | 10 | 1A | 10 | —150 | | 700* | <25 | | F-135 |
| 2SC 1198 | " | " | 45 | 4 | 3.5A | 30W (Tc = 25°C) | 175 | 50 | 15 | 20 | 10 | 1A | 10 | —150 | | 800* | 30 | | F-213 |
| 2SC 1199 | RF.LN | " | 50 | 3 | 300 | 600 | 150 | 0.1 | 20 | 80 | 10 | 20 | 10 | —20 | | 1400* | 2.2 | Ccrbb' 5 pS | F-85B |
| 2SC 1200 | PA | " | 40 | 3.5 | 180 | 2.5W (Tc = 25°C) | 175 | 1 | 20 | 120 | 5 | 100 | 5 | —100 | | 1700* | 2.3 | | F-136 |
| 2SC 1201 | | | | | | | | | | | | | | | | | | | |
| 2SC 1202 | | | | | | | | | | | | | | | | | | | |
| 2SC 1203 | | | | | | | | | | | | | | | | | | | |
| 2SC 1204 | RF.AF | Si.EP | 30 | | 100 | 310 | 125 | 0.5 | 18 | 250 | 12 | 2 | 12 | —0.1 | 130 | 230* | 1.8 | 60* | F-207 |
| 2SC 1205 | RF.Mix Conv.Osc | Si.P | 30 | | 100 | 310 | 125 | 0.5 | 18 | 120 | 12 | 2 | 12 | —2 | | 230* | 1.5 | Ccrbb' 13pS | F-37 |
| 2SC 1206 | RF.PA | Si.EP | 45 | 4.5 | 1.7A | 25W (Tc = 25°C) | 175 | 1mA | 30 | 50 | 25 | 50 | | | | | | | F-209 |
| 2SC 1207 | " | " | 45 | 4.5 | 3A | 30W (Tc = 25°C) | 175 | 2mA | 30 | 50 | 25 | 50 | | | | | | | F-209 |
| 2SC 1208 | " | " | 36 | 5 | 10A | 60W (Tc = 25°C) | 175 | 2mA | 15 | 50 | 10 | 500 | | | | | | | F-127 |
| 2SC 1209 | " | " | 25 | 4 | 700 | 500 | 125 | 1 | 25 | 100 | 1 | 500 | 6 | —10 | | 150* | 15 | Ccrbb' 100pS | F-138B |
| 2SC 1210 | " | " | 45 | 4 | 500 | 500 | 125 | 1 | 25 | 100 | 2 | 150 | 6 | —10 | | 150* | 10 | Ccrbb' 100pS | F-138B |
| 2SC 1211 | RF.PA | Si.PA | 65 | 4 | 500 | 500 | 125 | 1 | 25 | 100 | 2 | 150 | 6 | —10 | | 150* | 10 | Ccrbb' 100pS | F-138B |
| 2SC 1212 | RF | " | 50 | 4 | 1A | 750 | 150 | 5 | 50 | 180 | 4 | 50 | 4 | —30 | | 160* | 30 | 4* | F-160 |
| 2SC 1213 | " | " | 35 | 4 | 500 | 400 | 125 | 0.5 | 20 | 180 | 3 | 10 | 6 | —1 | | 50* | 5 | 9* | F-170 |
| 2SC 1214 | " | " | 50 | 4 | 500 | 600 | 125 | 0.5 | 20 | 180 | 3 | 10 | 6 | —1 | | 50* | 5 | 9* | F-170 |
| 2SC 1215 | " | " | 30 | 3 | 50 | 200 | 125 | 100 | 30 | 100 | 10 | 2 | 10 | —10 | | 1200* | Cre 1pF | 30 | F-138 |
| 2SC 1216 | SW | Si.E | 40 | 5 | 200 | 300 | 150 | 0.1 | 30 | 140 | 1 | 10 | 10 | —10 | | 500* | 3 | | F-49C |
| 2SC 1217 | RF.SW | " | 150 | 5 | 300 | 750 | 175 | 0.1 | 100 | 70 | 10 | 50 | 10 | —50 | | 250* | 3.7 | 13* | F-84B |
| 2SC 1218 | " | " | 80 | 5 | 500 | 750 | 175 | 0.1 | 50 | 80 | 10 | 50 | 10 | —50 | | 370* | 3.5 | 20* | F-84B |
| 2SC 1219 | RF | Si.EP | 30 | 5 | 500 | 200 | 125 | 1 | 12 | 160 | 2 | 100 | 6 | —1 | | 60* | 12 | 70* | F-138 |
| 2SC 1220 | " | " | 50 | 5 | 500 | 200 | 125 | 0.5 | 12 | 160 | 2 | 100 | 6 | —1 | | 60* | 12 | 70* | F-138 |
| 2SC 1221 | | | | | | | | | | | | | | | | | | | |
| 2SC 1222 | RF.LN | Si.E | 60 | 5 | 100 | 250 | 125 | 0.05 | 60 | 500 | 3 | 0.5 | 3 | —1 | | 100* | 3.5 | 50 | F-138 |
| 2SC 1223 | PA | Si.EP | 30 | 4 | 500 | 800 | 175 | 50 | 15 | 70 | 15 | 30 | | | | | | | F-84B |
| 2SC 1224 | SW.PA | " | 130 | 5 | 800 | 7W (Tc = 25°C) | 150 | 10 | 25 | 100 | 4 | 300 | | | | | | | F-132 |
| 2SC 1225 | | | | | | | | | | | | | | | | | | | |
| 2SC 1226 | PA | Si.EP | 40 | 5 | 2A | 10W (Tc = 25°C) | 150 | 1 | 20 | 120 | 5 | 1A | 5 | —500 | | 150* | 50 | 3.3* | F-161 |
| 2SC 1227 | SW | Si.TMe | 300 | 5 | 10A | 100W (Tc = 25°C) | 175 | 20 | 150 | 50 | 5 | 5A | 5 | —1A | | 27* | | | F-102 |
| 2SC 1228 | " | " | 500 | 5 | 10A | 100W (Tc = 25°C) | 175 | 20 | 150 | 15 | 5 | 5A | 5 | —1A | | 15* | | | F-102 |
| 2SC 1229 | " | " | 250 | 5 | 10A | 100W (Tc = 25°C) | 175 | 100 | 150 | 50 | 5 | 5A | 5 | —1A | | 27* | | | F-102 |
| 2SC 1230 | " | " | 450 | 5 | 10A | 100W (Tc = 25°C) | 175 | 100 | 150 | 15 | 5 | 5A | 5 | —1A | | 15* | | | F-102 |
| 2SC 1231 | " | Si.EP | 20 | 4 | 200 | 300 | 175 | 0.4 | 15 | 60 | 1 | 10 | 10 | —10 | | 800* | 2 | | F-49C |
| 2SC 1232 | PA | " | 45 | 3.5 | 1A | 12W (Tc = 25°C) | 175 | 500 | 20 | 50 | 5 | 500 | | | | | | | F-133 |
| 2SC 1233 | " | " | 45 | 3.5 | 2A | 20W (Tc = 25°C) | 175 | 1mA | 20 | 50 | 5 | 1A | | | | | | | F-133 |
| 2SC 1234 | | | | | | | | | | | | | | | | | | | |
| 2SC 1235 | | | | | | | | | | | | | | | | | | | |
| 2SC 1236 | LN | Si.EP | 20 | 2 | 30 | 200 | 175 | 0.1 | 10 | 70 | 10 | 10 | 10 | —10 | | 6500* | 0.8 | 20* | F-140 |
| 2SC 1237 | PA | Si.EMe | 85 | 4 | 2A | 10W (Tc = 25°C) | 150 | 10 | 20 | 40 | 5 | 500 | 5 | —100 | | 100* | 30 | | F-119 |
| 2SC 1238 | " | Si.EP | 35 | 4 | 150 | 5W (Tc = 25°C) | 175 | 50 | 25 | 50 | 15 | 40 | | | | | | | F-157 |
| 2SC 1239 | " | " | 80 | 4.5 | 4A | 12.5W (Tc = 25°C) | 175 | 10 | 30 | 50 | 10 | 100 | | | | | | | F-97B |
| 2SC 1240 | RF | " | 40 | 3 | 50 | 350 | 175 | 0.1 | 25 | 70 | 10 | 10 | 10 | —10 | | 600* | 1.5 | Ccrbb' 5 pS | F-138B |

**Pin Configurations are 1. Emitter, 2. Base, 3. Collector, 4. Shield, unless otherwise specified. (Outline Dimensions: mm)**

| TYPE NO. | USES | MATERIAL STRUCTURE | $V_{CBO}$ (V) | $V_{EBO}$ (V) | Ic (mA) | Pd (mW) | Tj (°C) | $I_{CBO}$ (uA) | VALUE OF DC/PULSE | | | BIAS | | hfe hfb* | fab fT (Mc) | Cob (pF) | $r_{bb'}$ $h_{ie(real)}$* (Ω) | CASE STYLE |
|---|---|---|---|---|---|---|---|---|---|---|---|---|---|---|---|---|---|---|
| | | | | | | | | $V_{CB}$(V) | hFE | $V_{CE}$(V) | Ic(mA) | $V_{CB}$(V) | Ie(mA) | | | | | |
| 2SC 1241 | PA | Si.EP | 40 | 4 | 1.5A | 10W (Tc = 25°C) | 175 | 100 | 15 | >10 | 5 | 500 | 10 | −250 | | | 400* | 18 | 7* F-135 |
| 2SC 1242 | " | " | 40 | 4 | 3A | 20W (Tc = 25°C) | 175 | 250 | 15 | >10 | 5 | 800 | 10 | −500 | | | 350* | 40 | 5* F-135 |
| 2SC 1243 | SW.PA | " | 25 | 5 | 1.5A | 7W (Tc = 25°C) | 150 | 1 | 16 | 100 | 4 | 500 | | | | | | | F-132 |
| 2SC 1244 | | | | | | | | | | | | | | | | | | | |
| 2SC 1245 | | | | | | | | | | | | | | | | | | | |
| 2SC 1246 | RF | Si.EP | 30 | 5 | 500 | 500 | 175 | 0.5 | 12 | 160 | 2 | 100 | 6 | −1 | | 60* | 12 | 70* | F-138 |
| 2SC 1247 | " | " | 50 | 5 | 500 | 500 | 175 | 0.5 | 12 | 160 | 2 | 100 | 6 | −1 | | 60* | 12 | 70* | F-138 |
| 2SC 1248 | LN | Si.E | 20 | 3 | 30 | 300 | 150 | 0.1 | 10 | 100 | 10 | 7 | 10 | −7 | | 2500* | 1.2 | | F-145 |
| 2SC 1249 | RF | " | 45 | 3 | 300 | 2.8W | 150 | 1 | 25 | 80 | 15 | 65 | 15 | −65 | | 1700* | 3 | | F-146 |
| 2SC 1250 | " | " | 45 | 3 | 300 | 2.8W | 150 | 1 | 25 | 80 | 15 | 65 | 15 | −65 | | 1900* | 3 | | F-146 |
| 2SC 1251 | " | " | 45 | 3 | 300 | 7W (Tc = 25°C) | 200 | 0.1 | 30 | 80 | 10 | 50 | 15 | −50 | | 2200* | NF = 3.5dB (f = 200MHz) | | F-202 |
| 2SC 1252 | " | " | 45 | 3 | 300 | 800 | 200 | 0.5 | 20 | 80 | 15 | 50 | 15 | −70 | | 1700* | NF = 3dB (f = 200MHz) | | F-84B |
| 2SC 1253 | " | " | 45 | 3 | 300 | 800 | 200 | 0.5 | 20 | 80 | 15 | 50 | 15 | −50 | | 2000* | NF = 3dB (f = 200MHz) | | F-84B |
| 2SC 1254 | " | " | 45 | 4 | 30 | 250 | 200 | 0.1 | 30 | 100 | 6 | 6 | 6 | −6 | | 1000* | NF = 3dB (f = 200MHz) | | F-50C |
| 2SC 1255 | " | " | 30 | 3 | 100 | 3.5W (Tc = 25°C) | 200 | 0.1 | 20 | 100 | 10 | 50 | 15 | −50 | | | | | F-202 |
| 2SC 1256 | PA | " | 36 | 4 | 800 | 5.5W (Tc = 25°C) | 200 | 10 | 20 | 50 | 10 | 300 | | | | | | | F-84B |
| 2SC 1257 | " | " | 36 | 4 | 1.5A | 14W (Tc = 25°C) | 200 | 20 | 20 | 50 | 10 | 800 | | | | | | | F-184 |
| 2SC 1258 | " | " | 36 | 4 | 3A | 28W (Tc = 25°C) | 200 | 50 | 20 | 50 | 10 | 1.5A | | | | | | | F-184 |
| 2SC 1259 | " | " | 36 | 4 | 6A | 58.3W (Tc = 25°C) | 200 | 1mA | 20 | 50 | 10 | 3A | | | | | | | F-203 |
| 2SC 1260 | RF | " | 45 | 4 | 30 | 250 | 200 | 0.1 | 30 | 100 | 6 | 6 | 6 | −6 | | 2000* | NF = 3dB (f = 500MHz) | | F-50C |
| 2SC 1261 | LN | Si.EP | 20 | 3 | 20 | 300 | 150 | 0.1 | 10 | 100 | 10 | 7 | 10 | −7 | | 2500* | 1.2 | | F-147 |
| 2SC 1262 | RF | " | 45 | 3 | 300 | 2.8W | 150 | 1 | 25 | 80 | 15 | 65 | 15 | −65 | | 1700* | 3 | | F-148 |
| 2SC 1263 | " | " | 45 | 3 | 300 | 2.8W | 150 | 1 | 25 | 80 | 15 | 65 | 15 | −65 | | 1900* | 3 | | F-148 |
| 2SC 1264 | " | " | 30 | 3 | 100 | 400 | 150 | 0.5 | 25 | 100 | 10 | 40 | 10 | −40 | | 2000* | 2.3 | 25* | F-147 |
| 2SC 1265 | Diff | Si.E | 20 | 3 | 50 | 300 | 175 | 0.5 | 10 | 100 | 5 | 1 | 5 | −15 | | 3000* | 1.5 | 30* | F-189 |
| 2SC 1266 | SW | " | 100 | 5.5 | 1.5A | 2W | 175 | 25 | 80 | 60 | 1 | 400 | 1 | −100 | | 150* | 30 | | F-83 |
| 2SC 1267 | RF | " | 45 | 3 | 300 | 7W (Tc = 25°C) | 200 | 0.1 | 30 | 80 | 15 | 50 | 15 | −50 | | | | | F-202 |
| 2SC 1268 | " | " | 20 | 3 | 30 | 200 | 200 | 0.01 | 8 | 100 | 8 | 10 | 8 | −10 | | 6500* | NF = 5.5dB (f = 4GHz) | | F-190 |
| 2SC 1269 | " | " | 20 | 3 | 30 | 200 | 200 | 0.01 | 8 | 100 | 8 | 10 | 8 | −10 | | 6500* | NF = 6dB (f = 4GHz) | | F-190 |
| 2SC 1270 | " | " | 20 | 3 | 30 | 200 | 200 | 0.01 | 8 | 100 | 8 | 10 | 8 | −10 | | 6500* | NF = 6.5dB (f = 4GHz) | | F-190 |
| 2SC 1271 | RF | Si.E | 20 | 3 | 30 | 200 | 200 | 0.01 | 8 | 100 | | 10 | 8 | −10 | | | NF = 6dB (f = 4GHz) | | F-190 |
| 2SC 1272 | " | " | 20 | 3 | 30 | 200 | 200 | 50nA | 15 | 80 | 10 | 40 | 10 | −60 | | | | | F-190 |
| 2SC 1273 | " | " | 20 | 3 | 100 | 1W (Tc = 25°C) | 175 | 50nA | 15 | 80 | 10 | 40 | 10 | −60 | | | | | F-190 |
| 2SC 1274 | SW | " | 40 | 5 | 300 | 300 | 175 | 0.25 | 20 | 70 | 1 | 30 | 8 | −10 | | 350* | 2.5 | | F-49C |
| 2SC 1275 | RF | " | 30 | 3 | 50 | 250 | 200 | 50nA | 15 | 80 | 10 | 10 | 10 | −10 | | 2000* | 1.1 | | F-50C |
| 2SC 1276 | RF.SW | " | 40 | 5 | 100 | 200 | 125 | 0.1 | 30 | 120 | 1 | 10 | 10 | −10 | | 600* | 3 | 60* | F-138 |
| 2SC 1277 | RF | " | 60 | 5 | 500 | 250 | 125 | 0.5 | 30 | 140 | 2 | 100 | 10 | −20 | | 60* | 20 | 30* | F-138 |
| 2SC 1278 | RF.SW | " | 150 | 5 | 50 | 250 | 125 | 0.1 | 100 | 130 | 3 | 15 | 10 | −10 | | 150* | 4.5 | 15 | F-138 |
| 2SC 1279 | " | " | 180 | 5 | 50 | 250 | 125 | 0.1 | 100 | 130 | 3 | 15 | 10 | −10 | | 150* | 4.5 | 15 | F-138 |
| 2SC 1280 | RF | Si.E | 15 | 10 | 300 | 250 | 125 | 0.1 | 10 | 20,000 | 5 | 100 | 10 | −10 | | 180* | 5 | 220* | F-138 |
| 2SC 1281 | " | Si.P | 20 | 5 | 20 | 300 | 175 | 0.1 | 15 | 200 | 1 | 10uA | 5 | −1 | | 120* | 2 | 60* | F-49C |
| 2SC 1282 | " | " | 70 | 5 | 20 | 300 | 175 | 0.1 | 15 | 73 | 1 | 2 | 5 | −1 | | 120* | 2 | 60* | F-49C |
| 2SC 1283 | " | " | 110 | 5 | 20 | 300 | 175 | 0.1 | 15 | 73 | 1 | 2 | 5 | −1 | | 120* | 2 | 60* | F-49C |
| 2SC 1284 | | | | | | | | | | | | | | | | | | | |
| 2SC 1285 | RF.AF | Si | 40 | 5 | 100 | 200 | 125 | 1 | 35 | 200 | 6 | 1 | 6 | −1 | 180 | 140* | 3 | $Ccrbb'$ 200pS | F-138 |
| 2SC 1286 | | | | | | | | | | | | | | | | | | | |
| 2SC 1287 | | | | | | | | | | | | | | | | | | | |
| 2SC 1288 | RF.SW | Si.EP | 7 | 3 | 60 | 200 | 175 | 0.5 | 6 | 50 | 1 | 20 | 4 | −20 | | 4500* | 1 | 50* | F-144 |
| 2SC 1289 | | | | | | | | | | | | | | | | | | | |
| 2SC 1290 | PA | Si.EP | 40 | 3 | 200 | 750 | 175 | 0.5 | 20 | 70 | 10 | 100 | 10 | −50 | | 1500 | 2 | 35* | F-84B |
| 2SC 1291 | | | | | | | | | | | | | | | | | | | |
| 2SC 1292 | PA.SW | Si.EMe | 300 | 5 | 2.5A | 80W (Tc = 25°C) | 150 | 200 | 300 | 25 | 10 | 500 | | | | | | | F-102 |
| 2SC 1293 | RF | Si.EP | 25 | 3 | 50 | 300 | 125 | 1 | 20 | 40 | 6 | 1 | 6 | −1 | | 400* | 1.3 | $Ccrbb'$ 25pS | F-138 |
| 2SC 1294 | | | | | | | | | | | | | | | | | | | |
| 2SC 1295 | PA | Si.TMe | 1000 | 6 | 2A | 40W (Tc = 25°C) | 150 | 100 | 100 | 7 | 5 | 1A | | | | | 60 | | F-102 |
| 2SC 1296 | | | | | | | | | | | | | | | | | | | |
| 2SC 1297 | PA | Si.EP | 50 | 4 | 3.5A | 50W (Tc = 25°C) | 175 | 1mA | 30 | 50 | 10 | 2A | 10 | −700 | | 190* | 75 | | F-149 |
| 2SC 1298 | " | " | 50 | 4 | 5A | 80W (Tc = 25°C) | 175 | 2mA | 30 | 50 | 10 | 3A | 10 | −1A | | 130* | 110 | | F-149 |
| 2SC 1299 | SW | Si.TMe | 300 | 5 | 30A | 200W (Tc = 25°C) | 175 | 50 | 150 | 40 | 5 | 10A | 5 | −2A | | 25* | | | F-191 |
| 2SC 1300 | " | " | 500 | 5 | 30A | 200W (Tc = 25°C) | 175 | 50 | 150 | 25 | 5 | 15A | 5 | −2A | | 20* | | | F-191 |

**Pin Configurations are 1. Emitter, 2. Base, 3. Collector, 4. Shield. unless otherwise specified. (Outline Dimensions: mm)**

| TYPE NO. | USES | MATERIAL STRUCTURE | $V_{CBO}$ (V) | $V_{EBO}$ (V) | $I_C$ (mA) | Pd (mW) | Tj (°C) | $I_{CBO}$ (uA) | $V_{CB}$(V) | VALUE OF DC/PULSE $h_{FE}$ | $V_{CE}$(V) | $I_C$(mA) | BIAS $V_{CB}$(V) | $I_e$(mA) | hfe hfb* | fab fT (Mc) | Cob (pF) | $r_{bb'}$ $h_{ie(real)}$* (Ω) | CASE STYLE |
|---|---|---|---|---|---|---|---|---|---|---|---|---|---|---|---|---|---|---|---|
| 2SC 1301 | SW | Si.TMe | 250 | 5 | 30A | 200W (Tc = 25°C) | 175 | 200 | 150 | 40 | 5 | 10A | 5 | —2A | | 25* | | | F-191 |
| 2SC 1302 | " | " | 400 | 5 | 30A | 200W (Tc = 25°C) | 175 | 200 | 150 | 25 | 5 | 15A | 5 | —2A | | 20* | | | F-191 |
| 2SC 1303 | PA | Si.EP | 40 | 4 | 300 | 600 | 175 | 1 | 20 | 70 | 13.5 | 100 | 10 | —30 | | 700* | 6.5 | 15 | F-84 |
| 2SC 1304 | " | Si.T | 300 | 5 | 500 | 20W (Tc = 25°C) | 150 | 100 | 300 | 60 | 10 | 100 | 10 | —50 | | 7* | 16 | 20* | F-153 |
| 2SC 1305 | | | | | | | | | | | | | | | | | | | |
| 2SC 1306 | PA | Si.E | 65 | 4 | 3A | 12W (Tc = 25°C) | 150 | 10 | 40 | 80 | 10 | 500 | 10 | —150 | | 300* | 20 | | F-151 |
| 2SC 1307 | " | " | 70 | 4 | 8A | 25W (Tc = 25°C) | 150 | 20 | 40 | 60 | 10 | 2A | 10 | —500 | | 150* | 80 | | F-151 |
| 2SC 1308 | | | 1500 | 6 | 7A | 50W Tc=25 | 150 | 5mA | 1400 | 3 | 5 | 4A | | | | | | | F-102 |
| 2SC 1309 | SW | Si.EMe | 1200 | 6 | 5A | 80W (Tc = 25°C) | 150 | 1mA | 1200 | 20 | 10 | 5A | | | | | | | F-102 |
| 2SC 1310 | RF.AF.LN SW | Si.EP | 30 | 4 | 100 | 100 | 125 | 0.1 | 25 | 250 | 6 | 1 | 6 | —1 | | 150* | 2.5 | Ccrbb 200pS | F-175 |
| 2SC 1311 | RF.AF.SW | " | 30 | 4 | 100 | 100 | 125 | 0.1 | 25 | 250 | 6 | 1 | 6 | —1 | | 150* | 2.5 | Ccrbb 200pS | F-175 |
| 2SC 1312 | RF.AF.LN | " | 35 | 4 | 100 | 200 | 125 | 0.1 | 35 | 500 | 6 | 1 | 6 | —1 | | 150* | 2.5 | Ccrbb 230pS | F-138B |
| 2SC 1313 | " | " | 50 | 4 | 100 | 200 | 125 | 0.1 | 50 | 350 | 6 | 1 | 6 | —1 | | 150* | 2 | Ccrbb 230pS | F-138B |
| 2SC 1314 | PA | " | 40 | 4.5 | 5A | 45W (Tc = 25°C) | 175 | 2mA | 15 | 30 | 10 | 200 | | | | | | | F-127 |
| 2SC 1315 | " | " | 35 | 4.5 | 500 | 4W (Tc = 25°C) | 175 | 50 | 15 | 50 | 10 | 100 | | | | | | | F-84B |
| 2SC 1316 | PA.SW | Si.TMe | 750 | 10 | 2A | 23W (Tc = 25°C) | 120 | 50 | 50 | 8 | 3 | 2A | 10 | —200 | | 8.5* | 120 | Ccrbb 410pS | F-100 |
| 2SC 1317 | PA | Si.EP | 30 | 5 | 500 | 400 | 125 | 0.1 | 20 | 160 | 10 | 150 | 10 | —50 | | 200* | 6 | 3.5* | F-138 |
| 2SC 1318 | " | " | 60 | 5 | 500 | 400 | 125 | 0.1 | 20 | 160 | 10 | 150 | 10 | —50 | | 200* | 6 | 3.5* | F-138 |
| 2SC 1319 | RF | Si.P | 40 | 4 | 25 | 250 | 125 | 0.1 | 20 | 90 | 10 | 3 | 10 | —3 | | 600* | 1.2 | Ccrbb 12pS | F-138 |
| 2SC 1320 | " | Si.E | 50 | 4 | 30 | 250 | 125 | 0.1 | 20 | 100 | 10 | 10 | 10 | —10 | | 850* | 1.4 | Ccrbb 9 pS | F-138 |
| 2SC 1321 | RF.Conv. Mix.Osc | " | 30 | 4 | 10 | 100 | 125 | 0.1 | 25 | 90 | 6 | 2 | 6 | —2 | | 1000* | 0.7 | Ccrbb 3 pS | F-176 |
| 2SC 1322 | SW | Si.TMe | 250 | 5 | 15A | 100W (Tc = 25°C) | 175 | 100 | 150 | 50 | 5 | 5A | 5 | —1A | | 27* | | | F-102 |
| 2SC 1323 | PA | Si.EP | 30 | 4 | 500 | 5W (Tc = 25°C) | 175 | 50 | 15 | 70 | 15 | 30 | | | | | | | F-125 |
| 2SC 1324 | " | " | 35 | 4 | 150 | 800 | 175 | 50 | 25 | 70 | 10 | 30 | | | | | | | F-85B |
| 2SC 1325 | SW | Si.TMe | 1500 | 6 | 6A | 80W (Tc = 25°C) | 150 | 20 | 1000 | 19 | 15 | 1A | | | | | | | F-102 |
| 2SC 1326 | | | | | | | | | | | | | | | | | | | |
| 2SC 1327 | RF.LN | Si.EP | 35 | 5 | 50 | 150 | 125 | 0.1 | 10 | 540 | 5 | 2 | 5 | —2 | | 250* | 2.2 | 70 | F-138 |
| 2SC 1328 | " | " | 55 | 5 | 50 | 150 | 125 | 0.1 | 10 | 540 | 5 | 2 | 5 | —2 | | 250* | 2.2 | 70 | F-138 |
| 2SC 1329 | RF | " | 50 | 5 | 8A | 60W (Tc = 25°C) | 200 | 2mA | 30 | 100 | 10 | 5A | | | | | | | F-203 |
| 2SC 1330 | RF.AF | Si.E | 50 | 5 | 100 | 400 | 125 | 0.1 | 40 | 150 | 6 | 1 | 6 | —1 | | 250* | 4.5 | 25* | F-44 |
| 2SC 1331 | | Si.P | 20 | 3 | 20 | 150 | 150 | 50mA | 10 | 100 | 5 | 4 | 10 | —4 | | 750* | Cre 0.37 | Ccrbb 10pS | F-50C |
| 2SC 1332 | | | | | | | | | | | | | | | | | | | |
| 2SC 1333 | PA | Si.EP | 45 | 3 | 1A | 8.3W (Tc = 25°C) | 175 | 100 | 30 | 60 | 10 | 300 | 10 | —200 | | 1200* | 7 | | F-115 |
| 2SC 1334 | " | Si.E | 45 | 3 | 1A | 11.6W (Tc = 25°C) | 200 | 100 | 30 | 60 | 10 | 300 | | | | | | | F-184 |
| 2SC 1335 | LN | Si.EPa | 30 | 5 | 100 | 200 | 125 | 0.5 | 18 | 500 | 12 | 2 | | | | 230* | 1.8 | Ccrbb 12pS | F-37 |
| 2SC 1336 | RF | " | 20 | 3 | 25 | 250 | 200 | 0.5 | 10 | 100 | 10 | 10 | 10 | —10 | | 4500* | NF = 3dB (f = 2GHz) | | F-190 |
| 2SC 1337 | PA | Si.EP | 35 | 4.5 | 2A | 20W (Tc = 25°C) | 175 | 200 | 15 | 50 | 10 | 100 | | | | | | | F-183 |
| 2SC 1338 | " | " | 35 | 4.5 | 3A | 30W (Tc = 25°C) | 175 | 500 | 15 | 50 | 10 | 100 | | | | | | | F-183 |
| 2SC 1339 | " | " | 35 | | 5A | 40W (Tc = 25°C) | 175 | 1mA | 15 | 50 | 10 | 100 | | | | | | | F-183 |
| 2SC 1340 | " | " | 35 | 4 | 1A | 5W (Tc = 25°C) | 175 | 100 | 25 | 70 | 10 | 100 | | | | | | | F-157 |
| 2SC 1341 | | | | | | | | | | | | | | | | | | | |
| 2SC 1342 | RF.Conv. Mix.Osc. | Si.P | 30 | 4 | 30 | 100 | 125 | 0.5 | 10 | 100 | 6 | 1 | 6 | —1 | | 250* | 1.1 | Ccrbb 20pS | F-37 |
| 2SC 1343 | RF.PA | Si.T | 150 | 5 | 10A | 100W (Tc = 25°C) | 150 | 1mA | 30 | 100 | 5 | 1A | | | | 14* | 240 | 7* | F-102 |
| 2SC 1344 | RF.LN | Si.EPa | 30 | 5 | 100 | 200 | 125 | 0.5 | 18 | 500 | 12 | 2 | | | | 230* | 1.8 | Ccrbb 12pS | F-37 |
| 2SC 1345 | " | " | 55 | 5 | 100 | 200 | 125 | 0.5 | 18 | 500 | 12 | 2 | | | | 230* | 1.8 | Ccrbb 12pS | F-37 |
| 2SC 1346 | PA | Si.EP | 30 | 5 | 500 | 600 | 125 | 0.1 | 20 | 160 | 10 | 150 | 10 | —50 | | 200* | 6 | 3.5* | F-171 |
| 2SC 1347 | " | " | 60 | 5 | 500 | 600 | 125 | 0.1 | 20 | 160 | 10 | 150 | 10 | —50 | | 200* | 6 | 3.5* | F-171 |
| 2SC 1348 | SW | Si.TMe | 1000 | | 4A | 125W (Tc = 25°C) | 120 | 2mA | 800 | 8 | 3 | 2A | | | | 5* | 175 | Ccrbb 200pS | F-102 |
| 2SC 1349 | | | | | | | | | | | | | | | | | | | |
| 2SC 1350 | | | | | | | | | | | | | | | | | | | |
| 2SC 1351 | | | | | | | | | | | | | | | | | | | |
| 2SC 1352 | | | | | | | | | | | | | | | | | | | |
| 2SC 1353 | | | | | | | | | | | | | | | | | | | |
| 2SC 1354 | PA | Si.EP | 55 | 4 | 5A | 60W (Tc = 25°C) | 175 | 1mA | 20 | 50 | 13.5 | 1A | | | | | | | F-143 |
| 2SC 1355 | " | " | 40 | 3.5 | 700 | 7W (Tc = 25°C) | 175 | 100 | 20 | 80 | 5 | 200 | 12 | —200 | | 1800* | 5 | | F-192 |
| 2SC 1356 | " | " | 40 | 3.5 | 1A | 12W (Tc = 25°C) | 175 | 200 | 20 | 80 | 5 | 500 | 12 | —300 | | 1800* | 8 | | F-192 |
| 2SC 1357 | | | | | | | | | | | | | | | | | | | |
| 2SC 1358 | SW | Si.TMe | 1400 | 6 | 4.5A | 50W (Tc = 25°C) | 150 | 20 | 1000 | 19 | 15 | 500 | | | | | | | F-102 |
| 2SC 1359 | RF | Si.EP | 30 | 5 | 30 | 250 | 125 | 0.1 | 10 | 100 | 10 | 1 | 10 | —1 | | 300* | Cre 0.9pF | 22 | F-128 |
| 2SC 1360 | " | " | 50 | 4 | 50 | 650 | 135 | 0.1 | 20 | 50 | 10 | 10 | 10 | —10 | | 500 | 1.5 | 20 | F-165 |

**Pin Configurations are 1. Emitter, 2. Base, 3. Collector, 4. Shield, unless otherwise specified. (Outline Dimensions: mm)**

| TYPE NO. | USES | MATERIAL STRUCTURE | $V_{CBO}$ (V) | $V_{EBO}$ (V) | $I_C$ (mA) | Pd (mW) | Tj (°C) | $I_{CBO}$ (uA) | VALUE OF DC/PULSE | | | | BIAS | | hfe hfb* | fab fT (Mc) | Cob (pF) | $r_{bb'}$ $h_{ie(real)}$* (Ω) | CASE STYLE |
|---|---|---|---|---|---|---|---|---|---|---|---|---|---|---|---|---|---|---|---|
| | | | | | | | | | $V_{CB}$(V) | hFE | $V_{CE}$(V) | $I_C$(mA) | $V_{CB}$(V) | $I_E$(mA) | | | | | |
| 2SC 1361 | LN | Si.PaMe | 25 | 6 | 200 | 320 | 120 | 0.2 | 25 | | 3 | 1 | | | | 140* | 4.5 | $Ccrbb'$ 300pS | F-138 |
| 2SC 1362 | " | " | 50 | 6 | 200 | 320 | 120 | 0.2 | 25 | | 3 | 1 | | | | 140* | 4.5 | $Ccrbb'$ 300pS | F-138 |
| 2SC 1363 | RF | Si.E | 25 | 6 | 200 | 250 | 120 | 0.2 | 25 | 200 | 3 | 1 | 6 | −2 | | 140 | 4.5 | $Ccrbb'$ 300pS | F-138 |
| 2SC 1364 | " | Si.PaMe | 50 | 6 | 200 | 320 | 120 | 0.2 | 25 | 200 | 3 | 1 | 6 | −2 | | 140* | 4.5 | $Ccrbb'$ 300pS | F-138 |
| 2SC 1365 | " | Si.E | 45 | 3 | 300 | 800 | 200 | 0.5 | 20 | 80 | 15 | 50 | 15 | −70 | | 1700* | NF = 3dB ($f$ = 200MHz) | | F-84B |
| 2SC 1366 | " | " | 45 | 3 | 300 | 800 | 200 | 0.5 | 20 | 80 | 10 | 50 | 15 | −50 | | 2000* | NF = 3dB ($f$ = 200MHz) | | F-84B |
| 2SC 1367 | PA | Si.TMe | 1000 | 5 | 1A | 50W ($T_C$ = 25°C) | 125 | 10 | 500 | 45 | 10 | 200 | 15 | −200 | | 6* | 60 | 25 | F-102 |
| 2SC 1368 | RF.PA | Si.EP | 25 | 5 | 1.5A | 8W ($T_C$ = 25°C | 150 | 20 | 25 | 130 | 2 | 500 | 2 | −200 | | 180* | 30 | 9.5* | F-160 |
| 2SC 1369 | | | | | | | | | | | | | | | | | | | |
| 2SC 1370 | | | | | | | | | | | | | | | | | | | |
| 2SC 1371 | | | | | | | | | | | | | | | | | | | |
| 2SC 1372 | RF.SW | Si.EP | 30 | 5 | 200 | 200 | 125 | 0.5 | 10 | 100 | 1 | 10 | 6 | −2 | | 250* | 4 | 80* | F-138 |
| 2SC 1373 | SW | " | 25 | 4 | 100 | 300 | 175 | 1 | 20 | 90 | 4 | 35 | | | | | | | F-49C |
| 2SC 1374 | " | " | 25 | 4 | 100 | 300 | 175 | 0.25 | 20 | 70 | 1 | 70 | | | | | | | F-49C |
| 2SC 1375 | " | " | 25 | 4 | 100 | 300 | 175 | 0.2 | 5 | 80 | 0.4 | 50 | | | | | | | F-49C |
| 2SC 1376 | " | " | 40 | 4 | 150 | 300 | 175 | 1 | 20 | 70 | 1 | 150 | | | | | | | F-49C |
| 2SC 1377 | PA | Si.E | 90 | 4 | 6A | 20W ($T_C$ = 25°C) | 150 | 10 | 60 | >20 | 5 | 1A | 5 | −200 | | 100* | 60 | | F-119 |
| 2SC 1378 | " | " | 40 | 4 | 4A | 35W ($T_C$ = 25°C) | 175 | 100 | 15 | >10 | 5 | 10A | 10 | −200 | | 150* | 65 | 2* | F-135 |
| 2SC 1379 | " | " | 40 | 4 | 7A | 70W ($T_C$ = 25°C) | 175 | 100 | 15 | >10 | 5 | 1A | 10 | −200 | | 150* | 130 | 1* | F-193 |
| 2SC 1380 | RF | " | 55 | 5 | 100 | 200 | 150 | 0.1 | 18 | 200-700 | 6 | 2 | 6 | −1 | | 80* | 6 | 100 | F-49C |
| 2SC 1381 | RF.PA | " | 100 | 5 | 1A | 800 | 150 | 1 | 30 | 70-240 | 2 | 150 | 2 | −150 | | 50* | 20 | 10 | F-164 |
| 2SC 1382 | " | " | 80 | 5 | 750 | 800 | 150 | 0.5 | 30 | 70-240 | 2 | 150 | 2 | −150 | | 100* | 15 | | F-164 |
| 2SC 1383 | PA | Si.EP | 30 | 5 | 1A | 750 | 135 | 0.1 | 20 | 160 | 10 | 500 | 10 | −50 | | 200* | 11 | 3.5* | F-165 |
| 2SC 1384 | " | " | 60 | 5 | 1A | 750 | 135 | 0.1 | 20 | 160 | 10 | 500 | 10 | −50 | | 200* | 11 | 3.5* | 165 |
| 2SC 1385 | SW | " | 60 | 5 | 500 | 800 | 175 | 0.5 | 30 | 80 | 1.1 | 300 | | | | | | | F-84B |
| 2SC 1386 | " | " | 70 | 5 | 700 | 800 | 175 | 100 | 60 | 80 | 1 | 60 | | | | | | | F-84B |
| 2SC 1387 | RF | " | 25 | 3 | 150 | 600 | 150 | 0.5 | 20 | 100 | 10 | 40 | 10 | −40 | | 1600* | 2.5 | 40* | F-84B |
| 2SC 1388 | | | | | | | | | | | | | | | | | | | |
| 2SC 1389 | | | | | | | | | | | | | | | | | | | |
| 2SC 1390 | | | | | | | | | | | | | | | | | | | |
| 2SC 1391 | PA | Si.T | 300 | 4 | 100 | 6.5W ($T_C$ = 25°C) | 150 | 100 | 300 | 60 | 10 | 50 | 50 | −20 | | 25* | 5 | 20* | F-153 |
| 2SC 1392 | | | | | | | | | | | | | | | | | | | |
| 2SC 1393 | RF.LN | Si.E | 30 | 5 | 20 | 250 | 125 | 0.1 | 20 | 100 | 10 | 2 | 10 | −3 | | 700* | 0.35 | $Ccrbb'$ 10pS | F-138C |
| 2SC 1394 | RF.Conv. Mix.Osc. | " | 30 | 5 | 20 | 250 | 125 | 0.1 | 20 | 100 | 10 | 2 | 10 | −3 | | 700* | 0.35 | $Ccrbb'$ 10pS | F-138C |
| 2SC 1395 | " | Si.EP | 30 | 5 | 20 | 250 | 125 | 0.1 | 12 | 100 | 10 | 5 | 10 | −5 | | 1100* | 1.2 | $Ccrbb'$ 12pS | F-138 |
| 2SC 1396 | " | " | 30 | 5 | 20 | 250 | 125 | 0.1 | 12 | 100 | 10 | 5 | 10 | −5 | | 1100* | 1.2 | $Ccrbb'$ 12pS | F-138 |
| 2SC 1397 | | | | | | | | | | | | | | | | | | | |
| 2SC 1398 | RF.PA | Si.EP | 70 | 5 | 2A | 15W ($T_C$ = 25°C) | 150 | 1 | 40 | 130 | 5 | 1A | 5 | −500 | | 150* | 50 | 3* | F-172 |
| 2SC 1399 | AF | Si.E | 100 | 5 | 50 | 250 | 125 | 0.05 | 100 | 600 | 3 | 0.5 | 6 | −1 | | 100* | 2.7 | | F-138 |
| 2SC 1400 | LN | Si.EPa | 85 | 5 | 50 | 300 | 125 | 0.1 | 60 | 500 | 6 | 1 | 6 | −1 | | 100* | 2.5 | 50* | F-138 |
| 2SC 1401 | SW | Si.TMe | 400 | 5 | 30A | 200W ($T_C$ = 25°C) | 175 | 200 | 150 | 25 | 5 | 15A | 5 | −2A | | 20* | | | F-191 |
| 2SC 1402 | PA | " | 140 | 6 | 8A | 70W ($T_C$ = 25°C) | 150 | 1mA | 140 | 60 | 4 | 3A | 12 | −500 | | 10* | 130 | 7* | F-102 |
| 2SC 1403 | " | " | 160 | 6 | 8A | 70W ($T_C$ = 25°C | 150 | 1mA | 160 | 60 | 4 | 3A | 12 | −150 | | 10* | 130 | 7* | F-102 |
| 2SC 1404 | " | Si.EP | 36 | 4 | 3.5A | 50W ($T_C$ = 25°C | 200 | 25mA | 36 | 30 | 5 | 1A | 5 | −1A | | 1000* | 55 | | F-229 |
| 2SC 1405 | " | " | 36 | 4 | 750 | 10W ($T_C$ = 25°C) | 175 | 50 | 20 | 40 | 10 | 100 | 10 | −100 | | 350* | 13 | | F-228 |
| 2SC 1406 | " | " | 30 | 5 | 1A | 1W | 135 | 0.1 | 20 | 160 | 10 | 500 | 10 | −50 | | 200* | 11 | 3.5* | F-173 |
| 2SC 1407 | " | " | 60 | 5 | 1A | 1W | 135 | 0.1 | 20 | 160 | 10 | 500 | 10 | −50 | | 200* | 11 | 3.5* | F-173 |
| 2SC 1408 | | | | | | | | | | | | | | | | | | | |
| 2SC 1409 | PA | Si.TMe | 200 | 6 | 2A | 12.5W ($T_C$ = 25°C) | 150 | 1 | 30 | 100 | 10 | 50 | 10 | −50 | | 20* | 95 | 20 | F-158 |
| 2SC 1410 | " | " | 200 | 6 | 2A | 12.5W ($T_C$ = 25°C) | 150 | 1 | 30 | 100 | 10 | 50 | 10 | −50 | | 20* | 95 | 20 | F-159 |
| 2SC 1411 | SW | Si.EP | 6 | 6 | 50 | 200 | 150 | 0.1 | 5 | 100 | | | | | | | 6 | | F-49C |
| 2SC 1412 | RF | Si.EP | 45 | 3 | 150 | 600 | 150 | 0.5 | 20 | 70 | 10 | 40 | 10 | −40 | | 1500 | 2.5 | 40 | F-84V |
| 2SC 1413 | PA | Si.T | 1200 | 6 | 5A | 50W ($T_C$ = 25°C) | 150 | 10 | 500 | 10 | 10 | 3.5A | 15 | −200 | | 4* | 175 | 10 | F-102 |
| 2SC 1414 | " | Si.EP | 40 | 3.5 | 2A | 20W ($T_C$ = 25°C) | 175 | 400 | 20 | 80 | 5 | 1A | 12 | −500 | | 1500* | 13 | | F-192 |
| 2SC 1415 | " | " | 40 | 3.5 | 3A | 25W ($T_C$ = 25°C | 175 | 600 | 20 | 80 | 5 | 2A | 12 | −500 | | 1200* | 18 | | F-192 |
| 2SC 1416 | RF | " | 55 | 5 | 50 | 200 | 150 | 0.1 | 30 | 350 | 6 | 2 | 6 | −1 | | 100* | 3 | 45 | F-195 |
| 2SC 1417 | RF.Conv. Mix.Osc | Si.P | 20 | | 30 | 100 | 125 | 1 | 10 | 100 | 6 | 1 | 6 | −1 | | 300* | 1.4 | $Ccrbb'$ 24pS | F-37 |
| 2SC 1418 | PA | Si.T | 50 | 4 | 2A | 20W ($T_C$ = 25°C) | 150 | 100 | 30 | 35-120 | 4 | 1A | | | | | | | F-37 |
| 2SC 1419 | " | " | 50 | 4 | 2A | 20W ($T_C$ = 25°C) | 150 | 100 | 30 | 35-120 | 4 | 1A | | | | | | | F-159 |
| 2SC 1420 | RF | Si.EP | 15 | 3 | 70 | 300 | 150 | 0.5 | 10 | 80 | 6 | 40 | 6 | −40 | | 6000* | 1 | 25 | F-199 |

**Pin Configurations are 1. Emitter, 2. Base, 3. Collector, 4. Shield, unless otherwise specified. (Outline Dimensions: mm)**

| TYPE NO. | USES | MATERIAL STRUCTURE | $V_{CBO}$ (V) | $V_{EBO}$ (V) | $I_C$ (mA) | $P_d$ (mW) | $T_j$ (°C) | $I_{CBO}$ (uA) | VALUE OF DC/PULSE | | | | BIAS | | hfe hfb* | fab fT (Mc) | Cob (pF) | $r_{bb'}$ $h_{ie(real)}$* (Ω) | CASE STYLE |
|---|---|---|---|---|---|---|---|---|---|---|---|---|---|---|---|---|---|---|---|
| | | | | | | | | | $V_{CB}$(V) | hFE | $V_{CE}$(V) | $I_C$(mA) | $V_{CB}$(V) | $I_E$(mA) | | | | | |
| 2SC 1421 | RF | Si.EP | 15 | 3 | 30 | 250 | 150 | 0.5 | 10 | 80 | 6 | 10 | 6 | −10 | | 5500* | 0.7 | 25* | F-199 |
| 2SC 1422 | " | " | 15 | 3 | 40 | 250 | 150 | 0.5 | 10 | 80 | 6 | 20 | 6 | −20 | | 5500* | 0.8 | 25* | F-199 |
| 2SC 1423 | " | " | 15 | 3 | 30 | 250 | 150 | 0.5 | 10 | 80 | 6 | 15 | 6 | −15 | | 7000* | 0.7 | 25* | F-199 |
| 2SC 1424 | " | Si.E | 30 | 3 | 50 | 250 | 200 | 50nA | 15 | 80 | 10 | 10 | 10 | −10 | | 2000* | 1.1 | | F-50C |
| 2SC 1425 | PA | " | 45 | 3 | 1A | 11.6W (Tc = 25°C) | 200 | 100 | 30 | 60 | 10 | 300 | | | | | | | F-184 |
| 2SC 1426 | RF | " | 35 | 3 | 200 | 3.5W (Tc = 25°C) | 200 | 0.1 | 20 | 100 | 10 | 50 | 10 | −50 | | 2500* | 1 | | F-85B |
| 2SC 1427 | RF.Conv. Mix.Osc | " | 30 | 4 | 10 | 100 | 125 | 0.1 | 25 | 120 | 6 | 2 | 6 | −2 | | 1000* | 0.7 | $Ccrbb'$ 3 pS | F-176 |
| 2SC 1428 | " | " | 50 | 5 | 50 | 150 | 125 | 0.1 | 15 | 110 | 3 | 0.5 | 6 | −1 | | 250* | 1.5 | $Ccrbb'$ 25pS | F-176 |
| 2SC 1429 | PA | Si.E PaMe | 12 | 6 | 2A | 950 | 120 | 0.1 | 16 | 200 | 2 | 100 | 2 | −10 | | 80* | 26 | $Ccrbb'$ 300pS | F-174 |
| 2SC 1430 | RF.PA | Si.EMe | 110 | | 1.5A | 500 | 150 | 100 | 50 | 100 | 2 | 400 | 2 | −200 | | 50* | 50 | $Ccrbb'$ 25pS, | F-181 |
| 2SC 1431 | " | " | 110 | 5 | 2A | 1.5W | 150 | 10 | 50 | 100 | 2 | 400 | 2 | −100 | | 80* | 25 | $Ccrbb'$ 25pS | F-99 |
| 2SC 1432 | SW | Si.EP | 30 | 10 | 300 | 150 | 125 | 0.1 | 20 | 40,000 | 6 | 100 | | | | | | | F-194 |
| 2SC 1433 | PA.SW | Si.TMe | 600 | 5 | 5A | 50W (Tc = 25°C) | 150 | 100 | 500 | 20-300 | 5 | 1A | 50 | | | | 100 | | F-102 |
| 2SC 1434 | " | " | 600 | 5 | 15A | 150W (Tc = 25°C) | 150 | 500 | 500 | 30-300 | 5 | 3A | 50 | | | | 200 | | F-102 |
| 2SC 1435 | " | " | 600 | 5 | 40A | 300W (Tc = 25°C) | 150 | 1mA | 500 | 30-300 | 5 | 10A | 50 | | | | 600 | | F-196 |
| 2SC 1436 | SW | Si.T | 230 | 6 | 15A | 100W (Tc = 25°C) | 150 | 1mA | 230 | 20 | 4 | 5A | 12 | −500 | | 10* | | | F-102 |
| 2SC 1437 | " | " | 230 | 6 | 50A | 200W (Tc = 25°C) | 150 | 1mA | 230 | 20 | 4 | 10A | 12 | −500 | | 1]* | | | F-230 |
| 2SC 1438 | RF | Si.EP | 150 | 5 | 50 | 500 | 150 | 1 | 140 | 150 | 5 | 10 | 5 | −10 | | 130* | 3 | | F-138 |
| 2SC 1439 | " | " | 150 | 5 | 50 | 500 | 150 | 1 | 140 | 150 | 5 | 10 | 5 | −10 | | 130* | 3 | | F-138 |
| 2SC 1440 | SW | Si.T | 150 | 6 | 15A | 100W (Tc = 25°C) | 150 | 1mA | 150 | 20 | 4 | 5A | 12 | −500 | | 10* | | | F-102 |
| 2SC 1441 | " | " | 200 | 6 | 15A | 100W (Tc = 25°C) | 150 | 1mA | 200 | 20 | 4 | 5A | 12 | −500 | | 10* | | | F-102 |
| 2SC 1442 | " | " | 150 | 6 | 50A | 200W (Tc = 25°C) | 150 | 1mA | 150 | 20 | 4 | 10A | 12 | −500 | | 10* | | | F-230 |
| 2SC 1443 | " | " | 200 | 6 | 50A | 200W (Tc = 25°C) | 150 | 1mA | 200 | 20 | 4 | 10A | 12 | −500 | | 10* | | | F-230 |
| 2SC 1444 | PA | " | 80 | 6 | 6A | 40W (Tc = 25°C) | 150 | 1mA | 80 | 80 | 4 | 1A | 10 | −500 | | 10* | 85 | 12* | F-99 |
| 2SC 1445 | " | " | 100 | 6 | 6A | 40W (Tc = 25°C) | 150 | 1mA | 100 | 80 | 4 | 1A | 10 | −500 | | 10* | 85 | 12* | F-99 |
| 2SC 1446 | " | Si.TP | 300 | 5 | 100 | 10W (Tc = 70°C) | 150 | 100 | 300 | 70 | 10 | 50 | 30 | −20 | | 55* | 8 | 10 | F-78 |
| 2SC 1447 | RF.PA | Si.T | 300 | 5 | 150 | 20W (Tc = 25°C) | 150 | 1 | 240 | 40-170 | 10 | 50 | 50 | −20 | | 80* | 7 | 30 | F-119 |
| 2SC 1448 | " | Si.TMe | 150 | 5 | 1.5A | 25W (Tc = 25°C) | 150 | 20 | 100 | 75 | 10 | 500 | 10 | −500 | | 5* | 50 | 25 | F-119 |
| 2SC 1449 | PA | Si.E | 40 | 5 | 2A | 5W (Tc = 25°C) | 150 | 0.5 | 35 | 90 | 2 | 300 | 5 | −100 | | 65* | 20 | 40* | F-225 |
| 2SC 1450 | " | Si.Me | 150 | 5 | 400 | 20W (Tc = 80°C) | 150 | 30 | 60 | 70 | 5 | 100 | 10 | 100 | | 15* | 50 | 25 | F-99 |
| 2SC 1451 | RF | Si.EP | 150 | 5 | 50 | 700 | 175 | 1 | 140 | 150 | 5 | 10 | 5 | −10 | | 130* | 2 | 70* | F-248 |
| 2SC 1452 | " | " | 150 | 5 | 50 | 700 | 175 | 1 | 140 | 150 | 5 | 10 | 5 | −10 | | 130* | 2 | 70* | F-248 |
| 2SC 1453 | " | " | 55 | 5 | 100 | 200 | 150 | 0.1 | 30 | 120 | 1 | 10 | 10 | −1 | | 150* | 5 | 20 | F-195 |
| 2SC 1454 | PA | Si.T | 300 | 7 | 4A | 50W (Tc = 25°C) | 150 | | | | | | 12 | −100 | | 10* | | | F-102 |
| 2SC 1455 | | | | | | | | | | | | | | | | | | | |
| 2SC 1456 | PA | Si.TP | 300 | 7 | 200 | 15W (Tc = 25°C) | 150 | 0.1 | 200 | 80 | 10 | 10 | 30 | −10 | | 80* | 3.8 | 30 | F-99 |
| 2SC 1457 | RF | Si.E | 35 | 3 | 150 | 800 | 200 | 0.1 | 20 | 100 | 10 | 50 | 10 | −50 | | 2700* | 1 | 45* | F-85B |
| 2SC 1458 | " | " | 20 | 3 | 50 | 300 | 200 | 0.1 | 10 | 100 | 5 | 30 | 5 | −15 | | 3000* | 0.9 | 30* | F-197 |
| 2SC 1459 | " | Si.EP | 15 | 3 | 70 | 300 | 175 | 0.5 | 10 | 80 | 6 | 40 | 6 | −40 | | 5000* | 1 | 25* | F-199 |
| 2SC 1460 | " | " | 15 | 3 | 30 | 250 | 175 | 0.5 | 10 | 80 | 6 | 10 | 6 | −10 | | 4500* | 0.7 | 25* | F-199 |
| 2SC 1461 | " | " | 15 | 3 | 40 | 250 | 175 | 0.5 | 10 | 80 | 6 | 20 | 6 | −20 | | 4500* | 0.8 | 25* | F-199 |
| 2SC 1462 | " | " | 15 | 3 | 30 | 250 | 175 | 0.5 | 10 | 80 | 6 | 15 | 6 | −15 | | 6500* | 0.7 | 25* | F-199 |
| 2SC 1463 | SW | Si.T | 450 | 5 | 4A | 75W (Tc = 25°C) | 175 | 10 | 150 | 18 | 5 | 1A | 6 | −300 | | 25* | 125 | 5* | F-102 |
| 2SC 1464 | PA | Si.EP | 50 | 3.5 | 500 | 4W (Tc = 25°C) | 175 | 250 | 20 | 80 | 5 | 200 | 12 | −100 | | 1300* | 3.5 | | F-84C |
| 2SC 1465 | " | " | 50 | 3.5 | 500 | 7W (Tc = 25°C) | 175 | 250 | 20 | 80 | 5 | 200 | 12 | −100 | | 1600* | 4.5 | | F-231 |
| 2SC 1466 | SW | Si.DB | 450 | 4 | 3A | 30W (Tc = 25°C) | 150 | 1mA | 450 | 16 | 5 | 1.5A | 10 | —1A | | 10* | 60 | | F-204 |
| 2SC 1467 | " | " | 500 | 4 | 3A | 30W (Tc = 25°C) | 150 | 1mA | 500 | 12 | 5 | 1.5A | 10 | —1A | | 10* | 60 | | F-204 |
| 2SC 1468 | " | " | 450 | 4 | 10A | 100W (Tc = 25°C) | 150 | 10mA | 450 | 16 | 5 | 5A | 10 | —1A | | 10* | 300 | | F-118 |
| 2SC 1469 | " | " | 500 | 4 | 10A | 100W (Tc = 25°C) | 150 | 10mA | 500 | 12 | 5 | 5A | 10 | —2A | | 10* | 300 | | F-118 |
| 2SC 1470 | " | " | 450 | 4 | 30A | 200W (Tc = 25°C) | 150 | 10mA | 450 | 16 | 5 | 10A | 10 | —2A | | 10* | 700 | | F-191 |
| 2SC 1471 | " | " | 500 | 4 | 30A | 200W (Tc = 25°C) | 150 | 10mA | 500 | 12 | 5 | 10A | 10 | —2A | | 10* | 700 | | F-191 |
| 2SC 1472 | RF | Si.EP | 40 | | 300 | 500 | 125 | 0.1 | 30 | 10,000 | 5 | 10 | 5 | −10 | | 150* | 3.5 | 220 | F-170 |
| 2SC 1473 | PA | " | 250 | 5 | 70 | 600 | 125 | 2 | 12 | 120 | 10 | 5 | 10 | −10 | | 80* | 5 | $Ccrbb'$ 60pS | F-138 |
| 2SC 1474 | RF.PA | Si.PaMe | 16 | 6 | 2A | 750 | 120 | 0.2 | 16 | 300 | 2 | 100 | 2 | −10 | | 60* | 30 | $Ccrbb'$ 600pS | F-259 |
| 2SC 1475 | " | " | 100 | 6 | 1A | 750 | 150 | 0.2 | 25 | 300 | 2 | 100 | 2 | −10 | | 80* | 16 | $Ccrbb'$ 300pS | F-259 |
| 2SC 1476 | PA | Si.EP | 38 | | 5A | 40W (Tc = 25°C) | 175 | 1mA | 15 | 50 | 5 | 1A | | | | | | | F-135 |
| 2SC 1477 | SW | Si.T | 230 | 6 | 9A | 80W (Tc = 25°C) | 150 | 1mA | 230 | 20 | 4 | 5A | | | | | | | F-102 |
| 2SC 1478 | RF.LN | Si.EP | 35 | 5 | 50 | 150 | 175 | 0.1 | 10 | 540 | 5 | 2 | 5 | −2 | | 150* | 2.2 | 70 | F-54 |
| 2SC 1479 | —A | " | 36 | 3.5 | 500 | 3W (Tc = 25°C) | 175 | 100 | 12 | 50 | 2 | 200 | 12 | −100 | | 1000* | 4 | | F-84B |
| 2SC 1480 | " | " | 36 | 3.5 | 500 | 7W (Tc = 25°C) | 175 | 100 | 12 | 50 | 2 | 500 | 12 | −100 | | 1200* | 5 | | F-246 |

**Pin Configurations are 1. Emitter, 2. Base, 3. Collector, 4. Shield, unless otherwise specified. (Outline Dimensions: mm)**

| TYPE NO. | USES | MATERIAL STRUCTURE | $V_{CBO}$ (V) | $V_{EBO}$ (V) | $I_C$ (mA) | $P_d$ (mW) | $T_j$ (°C) | $I_{CBO}$ (uA) | VALUE OF DC/PULSE BIAS $V_{CB}$(V) | $h_{FE}$ | $V_{CE}$(V) | $I_C$(mA) | $V_{CB}$(V) | $I_E$(mA) | hfe hfb* | fab fT (Mc) | Cob (pF) | $r_{bb'}$ $h_{ie(real)}$* (Ω) | CASE STYLE |
|---|---|---|---|---|---|---|---|---|---|---|---|---|---|---|---|---|---|---|---|
| 2SC 1481 | PA | Si.EP | 36 | 3.5 | 1A | 12W | 175 | 200 | 12 | 50 | 2 | 1A | 12 | —200 | | 1000* | 10 | | F-246 |
| 2SC 1482 | " | " | 36 | 3.5 | 2A | 20W | 175 | 500 | 12 | 50 | 2 | 2A | 12 | —500 | | 800* | 18 | | F-246 |
| 2SC 1483 | LN | " | 20 | 3 | 40 | 300 | 150 | 0.1 | 10 | 100 | 6 | 10 | 6 | —10 | | 3000* | 0.9 | 25* | F-214 |
| 2SC 1484 | RF | " | 45 | 3 | 300 | 5W | 150 | 1 | 25 | 80 | 15 | 65 | 15 | —65 | | 2000* | 2.8 | 25* | F-215 |
| 2SC 1485 | SW | Si.T | 250 | 6 | 125 | 350 | 175 | 1 | 30 | 90 | 4 | 10 | | | | | | | F-49C |
| 2SC 1486 | PA | Si.EP | 36 | 4 | 400 | 5W ($T_c$ = 25°C) | 200 | 1mA | 15 | 80 | 5 | 100 | | | | | 11 | | F-216 |
| 2SC 1487 | " | " | 36 | 4 | 800 | 15W ($T_c$ = 25°C) | 200 | 1mA | 15 | 80 | 5 | 200 | | | | | 18 | | F-216 |
| 2SC 1488 | " | " | 36 | 4 | 2A | 37.5W ($T_c$ = 25°C) | 200 | 2mA | 15 | 80 | 5 | 500 | | | | | 38 | | F-216 |
| 2SC 1489 | " | " | 36 | 4 | 6A | 60W ($T_c$ = 25°C) | 200 | 2.5mA | 15 | 80 | 5 | 1A | | | | | 55 | | F-217 |
| 2SC 1490 | " | " | 36 | 4 | 1A | 12W ($T_c$ = 25°C) | 200 | 250 | 15 | 80 | 5 | 250 | | | | | 15 | | F-217 |
| 2SC 1491 | " | " | 36 | 4 | 2.5A | 31W ($T_c$ = 25°C) | 200 | 500 | 15 | 50 | 5 | 500 | | | | | 70 | | F-217 |
| 2SC 1492 | " | " | 36 | 4 | 4A | 65W ($T_c$ = 25°C) | 200 | 1mA | 15 | 50 | 5 | 1A | | | | | 110 | | F-217 |
| 2SC 1493 | " | " | 36 | 4 | 4A | 65W ($T_c$ = 25°C) | 200 | 1mA | 15 | 50 | 5 | 1A | | | | | 110 | | F-217 |
| 2SC 1494 | " | " | 36 | 4 | 6A | 80W ($T_c$ = 25°C) | 200 | 2.5mA | 15 | 40 | 5 | 1A | | | | | 170 | | F-217 |
| 2SC 1495 | " | " | 36 | 4 | 400 | 2W ($T_c$ = 25°C) | 200 | 500 | 15 | 80 | 5 | 50 | | | | | 6 | | F-218 |
| 2SC 1496 | | | | | | | | | | | | | | | | | | | |
| 2SC 1497 | | | | | | | | | | | | | | | | | | | |
| 2SC 1498 | PA | Si.EP | 36 | 4 | 2.5A | 45W ($T_c$ = 25°C) | 200 | 1mA | 15 | 80 | 5 | 1A | | | | | 65 | | F-219 |
| 2SC 1499 | " | " | 36 | 4 | 6A | 115W ($T_c$ = 25°C) | 200 | 20mA | 15 | 60 | 5 | 4A | | | | | 85 | | F-219 |
| 2SC 1500 | " | " | 36 | 4 | 8A | 115W ($T_c$ = 25°C) | 200 | 20mA | 15 | 60 | 5 | 4A | | | | | 85 | | F-219 |
| 2SC 1501 | PA | Si.EP | 300 | 5 | 100 | 10W ($T_c$ = 25°C) | 150 | 100 | 300 | 70 | 10 | 50 | 30 | —20 | | 55* | 10 | | F-232 |
| 2SC 1502 | | | | | | | | | | | | | | | | | | | |
| 2SC 1503 | PA | Si.EP | 50 | | 3A | 30W ($T_c$ = 25°C) | 175 | 500 | 20 | 50 | 5 | 1A | | | | | | | F-135 |
| 2SC 1504 | SW | Si.T | 400 | 6 | 2A | 40W ($T_c$ = 25°C) | 150 | 1mA | 400 | 60 | 4 | 1A | 12 | —100 | | 10* | | | F-99 |
| 2SC 1505 | PA | " | 300 | 7 | 200 | 15W ($T_c$ = 25°C) | 150 | 0.1 | 200 | 80 | 10 | 10 | 30 | —10 | | 80* | 4 | 30 | F-151 |
| 2SC 1506 | " | " | 300 | 7 | 200 | 15W ($T_c$ = 25°C) | 150 | 0.1 | 200 | 80 | 10 | 10 | 30 | —10 | | 80* | 4 | 30 | F-152 |
| 2SC 1507 | " | " | 300 | 7 | 200 | 15W ($T_c$ = 25°C) | 150 | 0.1 | 200 | 80 | 10 | 10 | 30 | —10 | | 80* | 4 | 30 | F-250 |
| 2SC 1508 | | | | | | | | | | | | | | | | | | | |
| 2SC 1509 | PA | Si.EP | 80 | 5 | 500 | 750 | 135 | 0.1 | 20 | 160 | 10 | 150 | 10 | —50 | | 120* | 11 | | F-165 |
| 2SC 1510 | " | " | 47 | 4.5 | 1A | 10W ($T_c$ = 25°C) | 175 | 200 | 30 | 50 | 25 | 100 | | | | | | 2k* | F-220 |
| 2SC 1511 | PA | Si.E | 50 | 4 | 3.5A | 50W ($T_c$ = 25°C) | 175 | 2mA | 30 | 60 | 10 | 1A | | | | | | | F-233 |
| 2SC 1512 | " | " | 50 | 4 | 5A | 65.2W ($T_c$ = 25°C) | 175 | 3mA | 30 | 60 | 10 | 1.5A | | | | | | | F-233 |
| 2SC 1513 | RF | Si.Pa | 40 | 3 | 300 | 800 | 175 | | | 35-250 | 15 | 30 | 15 | —30 | | 1800* | Cre < 3pF | | F-85C |
| 2SC 1514 | RF.PA | Si.T | 300 | 5 | 100 | 1.25W | 150 | 0.5 | 250 | 30-200 | 20 | 20 | | | | 80* | <4 | | F-234 |
| 2SC 1515 | RF | Si.T | 200 | 5 | 50 | 200 | 125 | 0.1 | 20 | 80 | 6 | 10 | 6 | —10 | | 110* | 3 | Ccrbb' 40pS | F-170 |
| 2SC 1516 | RF.PA | Si.EP | 35 | | 1.5A | 10W ($T_c$ = 25°C) | 150 | 20 | 30 | 150 | 2 | 500 | 2 | —200 | | 110* | 35 | 10* | F-234 |
| 2SC 1517 | " | Si.T | 50 | 4 | 1A | 10W ($T_c$ = 25°C) | 150 | 5 | 30 | 160 | 4 | 50 | 4 | —50 | | 10* | 30 | 50* | F-234 |
| 2SC 1518 | PA | Si.EP | 25 | 5 | 1A | 750 | 135 | 0.1 | 25 | 160 | 2 | 500 | 10 | —50 | | 150* | 12 | 3.5k* | F-165 |
| 2SC 1519 | " | Si.TP | 250 | 7 | 200 | 10W | 150 | -0.1 | 200 | 90 | 10 | 10 | 10 | —10 | | 80* | 3.5 | 30 | F-289 |
| 2SC 1520 | " | " | 250 | 7 | 200 | 10W | 150 | 0.1 | 200 | 90 | 10 | 10 | 10 | —10 | | 80* | 3.5 | 30 | F-290 |
| 2SC 1521 | " | " | 250 | 7 | 200 | 10W | 150 | 0.1 | 200 | 90 | 10 | 10 | 10 | —10 | | 80* | 3.5 | 30 | F-291 |
| 2SC 1522 | " | " | 250 | 7 | 200 | 10W | 150 | 0.1 | 200 | 90 | 10 | 10 | 10 | —10 | | 80* | 3.5 | 30 | F-292 |
| 2SC 1523 | RF.PA | Si.Pa | 40 | 3 | 300 | 3.5W | 175 | 10 | 15 | 35-250 | 15 | 50 | | | | 2000* | Cre3 | | F-269 |
| 2SC 1524 | PA | Si.EP | 50 | 3.5 | 1A | 12W | 175 | 200 | 20 | 50 | 5 | 500 | 12 | —250 | | 800* | 8 | | F-246 |
| 2SC 1525 | " | " | 50 | 3.5 | 2A | 20W | 175 | 400 | 20 | 50 | 5 | 1A | 12 | —500 | | 800* | 13 | | F-246 |
| 2SC 1526 | " | " | 50 | 3.5 | 3A | 25W | 175 | 600 | 20 | 50 | 5 | 2A | 12 | —500 | | 1000* | 18 | | F-246 |
| 2SC 1527 | | | | | | | | | | | | | | | | | | | |
| 2SC 1528 | PA | Si.EP | 40 | 4.5 | 2.5A | 25W | 175 | 500 | 25 | 40 | 10 | 100 | | | | | | | F-271 |
| 2SC 1529 | RF | " | 30 | 4 | 20 | 120 | 150 | 0.1 | 12 | 60 | 10 | 5 | | | | | | | F-50C |
| 2SC 1530 | PA | " | 50 | 4.5 | 350 | 5W | 150 | 100 | 30 | 50 | 10 | 100 | | | | | | | F-221 |
| 2SC 1531 | | | | | | | | | | | | | | | | | | | |
| 2SC 1532 | SW | Si.TMe | 300 | 5 | 30A | 200W | 150 | 500 | 300 | 20-100 | 5 | 20A | | | | | | | F-196 |
| 2SC 1533 | PA | Si.EP | 45 | 3.5 | 500 | 7W | 175 | 100 | 20 | 50 | 5 | 200 | 12 | —200 | | 1.8GHz* | 5 | | F-246 |
| 2SC 1534 | " | " | 45 | 3.5 | 1A | 12W | 175 | 200 | 20 | 50 | 5 | 500 | 12 | —300 | | 1.6GHz* | 8 | | F-246 |
| 2SC 1535 | " | " | 45 | 3.5 | 2A | 25W | 175 | 400 | 20 | 50 | 5 | 1A | 12 | —500 | | 1.2GHz* | 13 | | F-246 |
| 2SC 1536 | " | " | 45 | 3.5 | 4A | 40W | 175 | 800 | 20 | 50 | 5 | 3A | 12 | —700 | | 800* | 23 | | F-246 |
| 2SC 1537 | RF.ConV.Mix Osc.AF.PA.SW | " | 50 | 5 | 30 | 150 | 125 | 1 | 30 | 330 | 3 | 0.5 | 6 | —1 | | 200* | 3.5 | Ccrbb' 120pS | F-235 |
| 2SC 1538 | RF.ConV.Mix Osc.AF.PA.LN | " | 50 | 5 | 30 | 150 | 125 | 1 | 30 | 330 | 3 | 0.5 | 6 | —1 | | 200* | 3.5 | Ccrbb' 120pS | F-235 |
| 2SC 1539 | RF.ConV.Mix Osc.AF.PA | " | 25 | 5 | 30 | 150 | 125 | 1 | 15 | 330 | 3 | 0.5 | 6 | —1 | | 200* | 3.5 | Ccrbb' 120pS | F-235 |
| 2SC 1540 | RF.ConV.Mix Osc.AF.PA.LN | " | 25 | 5 | 30 | 150 | 125 | 1 | 15 | 330 | 3 | 0.5 | 6 | —1 | | 200* | 3.5 | Ccrbb' 120pS | F-235 |

Pin Configurations are 1. Emitter, 2. Base, 3. Collector, 4. Shield, unless otherwise specified. (Outline Dimensions: mm)

| TYPE NO. | USES | MATERIAL STRUCTURE | $V_{CBO}$ (V) | $V_{EBO}$ (V) | $I_C$ (mA) | Pd (mW) | Tj (°C) | $I_{CBO}$ (uA) | VALUE OF DC/PULSE $V_{CB}$(V) | $h_{FE}$ | $V_{CE}$(V) | $I_C$(mA) | BIAS $V_{CB}$(V) | $I_E$(mA) | hfe hfb* | fab fT (Mc) | Cob (pF) | $r_{bb'}$ $h_{ie(real)}$* (Ω) | CASE STYLE |
|---|---|---|---|---|---|---|---|---|---|---|---|---|---|---|---|---|---|---|---|
| 2SC 1541 | RF.Conv.Mix Osc.AF.PA | Si.EP | 40 | 5 | 150 | 300 | 125 | 1 | 24 | 330 | 3 | 10 | 6 | —1 | | 250* | 4.5 | $C_{rbb'}$ 150pS | F-235 |
| 2SC 1542 | " | " | 25 | 5 | 150 | 300 | 125 | 1 | 15 | 330 | 3 | 10 | 6 | —1 | | 250* | 4.5 | $C_{rbb'}$ 150pS | F-235 |
| 2SC 1543 | SW.AF | " | 40 | 5 | 20 | 150 | 125 | 1 | 24 | 220 | 3 | 10 | 6 | —1 | | | | | F-235 |
| 2SC 1544 | " | " | 25 | 5 | 20 | 150 | 125 | 1 | 15 | 220 | 3 | 10 | 6 | —1 | | | | | F-235 |
| 2SC 1545 | RF.Conv.Mix Osc.PA | " | 40 | 6 | 300 | 300 | 125 | 1 | 24 | 10,000 | 5 | 100 | 5 | —10 | | 200* | 5 | $C_{rbb'}$ 100pS | F-235 |
| 2SC 1546 | RF.Conv.Mix Osc.PA.SW | " | 25 | 6 | 300 | 300 | 125 | 1 | 15 | 10,000 | 5 | 100 | 5 | —10 | | 200* | 5 | $C_{rbb'}$ 100pS | F-235 |
| 2SC 1547 | RF | Si.P | 30 | 3 | 20 | 150 | 175 | 1 | 25 | 100 | 10 | 2 | 10 | —3 | | 900* | 0.8 | 60* | F-50-C |
| 2SC 1548 | PA | Si.EP | 50 | | 5A | 45W (Tc = 25°C) | 175 | 1mA | 20 | 50 | 5 | 1A | | | | | | | F-213 |
| 2SC 1549 | | | | | | | | | | | | | | | | | | | |
| 2SC 1550 | PA | Si.TP | 250 | 5 | 100 | 10W (Tc = 25°C) | 150 | 100 | 250 | 100 | 50 | 5 | 30 | —20 | | 100* | 3.5 | 15 | F-236 |
| 2SC 1551 | LN | Si.EP | 20 | 2 | 30 | 200 | 175 | 0.1 | 10 | 70 | 10 | 10 | 10 | —10 | | 6.5GHz* | 0.7 | 15* | F-237 |
| 2SC 1552 | " | " | 20 | 3 | 30 | 250 | 175 | 0.1 | 10 | 70 | 10 | 10 | 10 | —10 | | 4.5GHz* | 0.8 | 15* | F-237 |
| 2SC 1553 | " | " | 20 | 3 | 30 | 175 | 175 | 0.1 | 10 | 100 | 10 | 5 | 10 | —10 | | 4.5GHz* | 0.9 | 40* | F-50C |
| 2SC 1554 | RF | " | 30 | 3 | 120 | 1.2W (Tc = 25°C) | 175 | 1 | 10 | 100 | 5 | 50 | 10 | —50 | | 4GHz* | 1.7 | 15* | F-238 |
| 2SC 1555 | " | " | 30 | 3 | 120 | 1.2W (Tc = 25°C) | 175 | 1 | 10 | 100 | 5 | 50 | 10 | —50 | | 4GHz* | 1.7 | 15* | F-239 |
| 2SC 1556 | " | " | 30 | 3 | 120 | 1.2W (Tc = 25°C) | 175 | 1 | 10 | 100 | 5 | 50 | 10 | —30 | | 3.5GHz* | 2 | 25* | F-85B |
| 2SC 1557 | PA | " | 40 | 3.5 | 180 | 3W (Tc = 25°C) | 175 | 1 | 10 | 150 | 5 | 50 | 18 | —50 | | 3GHz* | 2.2 | 10* | F-85B |
| 2SC 1558 | LN | " | 15 | 3 | 80 | 250 | 175 | 0.1 | 10 | 75 | 8 | 50 | 5 | —30 | | 7GHz* | 1.1 | 20* | F-237 |
| 2SC 1559 | " | " | 15 | 3 | 80 | 400 | 175 | 0.1 | 10 | 75 | 3 | 50 | 5 | —30 | | 7GHz* | 1.1 | 20* | F-238 |
| 2SC 1560 | | | | | | | | | | | | | | | | | | | |
| 2SC 1561 | PA | Si.EP | 55 | 3.5 | 500 | 7W (Tc = 25°C) | 175 | 100 | 20 | 50 | 5 | 200 | 12 | —200 | | 1.8GHz* | 4.5 | | F-246 |
| 2SC 1562 | " | " | 55 | 3.5 | 1A | 12W (Tc = 25°C) | 175 | 200 | 20 | 50 | 5 | 500 | 12 | —300 | | 1.6GHz* | 7 | | F-246 |
| 2SC 1563 | " | " | 55 | 3.5 | 2A | 25W (Tc = 25°C) | 175 | 400 | 20 | 50 | 5 | 1A | 12 | —500 | | 1.2GHz* | 12 | | F-246 |
| 2SC 1564 | " | " | 55 | 3.5 | 4A | 40W (Tc = 25°C) | 175 | 800 | 20 | 50 | 5 | 3A | 12 | —700 | | 800* | 23 | | F-246 |
| 2SC 1565 | PA | Si.P | 150 | 5 | 250 | 10W (Tc = 90°C) | 150 | 30 | 60 | 120 | 10 | 100 | 10 | —50 | | 150* | 10 | 15 | F-236 |
| 2SC 1566 | RF | Si.TP | 250 | 5 | 100 | 4W (Tc = 25°C) | 150 | 1mA | 250 | 100 | 20 | 4 | 10 | —3 | 35 | 100* | 3.2 | $C_{rbb'}$ 60pS | F-222 |
| 2SC 1567 | PA | Si.EP | 100 | 5 | 500 | 1.2W | 150 | 1 | 100 | 160 | 10 | 150 | 10 | —50 | | 120* | 11 | 3.5k* | F-222 |
| 2SC 1568 | " | " | 18 | 5 | 1A | 4W (Tc = 25°C) | 150 | 0.1 | 18 | 200 | 2 | 500 | 6 | —50 | | 150* | 12 | 3.5k* | F-222 |
| 2SC 1569 | " | Si.TP | 300 | 5 | 150 | 1.5W | 150 | 0.1 | 100 | 40-170 | 10 | 50 | 10 | —30 | | 100* | 5 | 10 | F-119 |
| 2SC 1570 | LN | Si.EP | 55 | 5 | 100 | 200 | 125 | 0.1 | 18 | 300 | 6 | 1 | 6 | —1 | | 100* | 3 | $C_{rbb'}$ 250pS | F-138 |
| 2SC 1571 | LN | Si.EP | 40 | 5 | 100 | 200 | 125 | 0.1 | 18 | 300 | 6 | 1 | 6 | —1 | | 100* | 3 | $C_{rbb'}$ 250pS | F-138 |
| 2SC 1572 | | | | | | | | | | | | | | | | | | | |
| 2SC 1573 | AF | Si.TP | 250 | 5 | 70 | 600 | 135 | 2 | 12 | 120 | 10 | 5 | 10 | —3 | 35 | 80* | 5 | $C_{rbb'}$ 60pS | F-165 |
| 2SC 1574 | LN | Si.EP | 20 | 2 | 30 | 400 | 175 | 0.1 | 10 | 70 | 10 | 5 | 10 | —10 | | | 11.5 | 20* | F-85B |
| 2SC 1575 | | | | | | | | | | | | | | | | | | | |
| 2SC 1576 | RF.PA | Si.TMe | 450 | 6 | 8A | 100W (Tc = 25°C) | 150 | 100 | 450 | 30-150 | 5 | 1A | 10 | —100 | | 10* | 80 | 25 | F-102 |
| 2SC 1577 | SW | " | 500 | 6 | 8A | 80W (Tc = 25°C) | 150 | 1mA | 500 | 30 | 4 | 3A | 12 | —500 | | 7* | 55 | 4* | F-102 |
| 2SC 1578 | " | " | 600 | 6 | 8A | 80W (Tc = 25°C) | 150 | 1mA | 600 | 30 | 4 | 3A | 12 | —500 | | 7* | 55 | 4* | F-102 |
| 2SC 1579 | PA | Si.T | 500 | 6 | 15A | 150W | 150 | 1mA | 500 | 20 | 4 | 5A | 12 | —500 | | 5* | 80 | 3* | F-102 |
| 2SC 1580 | " | " | 600 | 6 | 15A | 150W | 150 | 1mA | 600 | 20 | 4 | 5A | 12 | —500 | | 5* | 80 | 3* | F-102 |
| 2SC 1581 | PA | Si.EP | 65 | | 7A | 80W (Tc = 25°C) | 175 | 3mA | 30 | 30 | 10 | 5A | | | | | | | F-223 |
| 2SC 1582 | " | " | 65 | | 13A | 140W (Tc = 25°C) | 175 | 6mA | 30 | 30 | 10 | 10A | | | | | | | F-223 |
| 2SC 1583 | Diff.Ln | " | 50 | 5 | 100 | 200 | 125 | 0.1 | 25 | 250-1200 | 6 | 1 | 6 | —1 | | 100* | 3.0 | | F-274 |
| 2SC 1584 | PA | Si.TMe | 150 | | 15A | 150W (Tc = 25°C) | 150 | 1mA | 150 | 60 | 4 | 5A | 12 | —500 | | 10* | 110 | 10* | F-102 |
| 2SC 1585 | " | " | 200 | | 15A | 150W (Tc = 25°C) | 150 | 1mA | 200 | 60 | 4 | 5A | 12 | —500 | | 10* | 110 | 10* | F-102 |
| 2SC 1586 | " | " | 250 | | 15A | 150W (Tc = 25°C) | 150 | 1mA | 250 | 60 | 4 | 5A | 12 | —500 | | 10* | 110 | 10* | F-102 |
| 2SC 1587 | " | Si.EP | 45 | 4.5 | 3A | 50W (Tc = 25°C) | 175 | 1mA | 30 | 50 | 25 | 200 | | | | | | | F-224 |
| 2SC 1588 | " | Si.E | 36 | 4 | 300 | 1.7W (Tc = 25°C) | 125 | 100 | 30 | 55 | 10 | 100 | 10 | —30 | | 900* | <10 | | F-167B |
| 2SC 1589 | " | " | 36 | 4 | 700 | 2.5W (Tc = 25°C) | 150 | 100 | 30 | 55 | 10 | 300 | 10 | —50 | | 700* | <15 | | F-167 |
| 2SC 1590 | " | " | 36 | 4 | 1.2A | 13.5W (Tc = 25°C) | 175 | 1mA | 30 | 50 | 10 | 500 | 10 | —300 | | 400* | <25 | | F-226 |
| 2SC 1591 | " | " | 36 | 4 | 2.5A | 30W (Tc = 25°C) | 175 | 2mA | 30 | 50 | 10 | 1A | 10 | —500 | | 250* | <40 | | F-226 |
| 2SC 1592 | " | " | 30 | 3 | 100 | 3.5W (Tc = 25°C) | 200 | 0.1 | 20 | 100 | 10 | 50 | | | | 2700* | 1 | | F-129 |
| 2SC 1593 | | | | | | | | | | | | | | | | | | | |
| 2SC 1594 | PA | Si.E | 35 | 3 | 200 | 7W (Tc = 25°C) | 200 | 10 | 20 | 60 | 10 | 100 | | | | 2500* | 2.8 | | F-129 |
| 2SC 1595 | | | | | | | | | | | | | | | | | | | |
| 2SC 1596 | RF | Si.EP | 150 | 5 | 50 | 450 | 175 | 1 | 140 | 60 | 5 | 10 | 5 | —10 | | 130* | 2 | 70* | F-55C |
| 2SC 1597 | | | | | | | | | | | | | | | | | | | |
| 2SC 1598 | | | | | | | | | | | | | | | | | | | |
| 2SC 1599 | | | | | | | | | | | | | | | | | | | |
| 2SC 1600 | RF | Si.E | 40 | 3 | 250 | 4.375W (Tc = 25°C) | 200 | 100 | 20 | 15-200 | 10 | 100 | 10 | —100 | | 2000* | 3 | | F-315 |

Pin Configurations are 1. Emitter, 2. Base, 3. Collector, 4. Shield, unless otherwise specified. (Outline Dimensions: mm)

| TYPE NO. | USES | MATERIAL STRUCTURE | $V_{CBO}$ (V) | $V_{EBO}$ (V) | $I_C$ (mA) | Pd (mW) | Tj (°C) | $I_{CBO}$ (uA) | VALUE OF DC/PULSE | | | | BIAS | | hfe hfb* | fab fT (Mc) | Cob (pF) | $r_{bb'}$ $h_{ie(real)}$* (Ω) | CASE STYLE |
|---|---|---|---|---|---|---|---|---|---|---|---|---|---|---|---|---|---|---|---|
| | | | | | | | | | $V_{CB}$(V) | hFE | $V_{CE}$(V) | $I_C$(mA) | $V_{CB}$(V) | $I_e$(mA) | | | | | |
| 2SC 1601 | RF.AF.LN | Si.EP | 35 | | 100 | 200 | 175 | 0.05 | 20 | 150 | 6 | 1 | 6 | −0.1 | | 200* | 2 | Ccrbb' 60pS | F-243 |
| 2SC 1602 | RF.AF | " | 35 | | 100 | 150 | 125 | 0.05 | 20 | 150 | 6 | 1 | 6 | −0.1 | | 200* | 2 | Ccrbb' 60pS | F-194 |
| 2SC 1603 | PA | " | 18 | 4 | 600 | 6W (Tc = 25°C) | 175 | 100 | 10 | 50 | 7 | 100 | | | | | | | F-254 |
| 2SC 1604 | " | " | 18 | 4 | 300 | 5W (Tc = 25°C) | 175 | 30 | 10 | 40 | 7 | 50 | | | | | | | F-255 |
| 2SC 1605 | " | " | 35 | 4.5 | 3.5A | 30W (Tc = 25°C) | 175 | 500 | 25 | 50 | 10 | 100 | | | | | | | F-256 |
| 2SC 1606 | RF.PA | " | 40 | 4 | 0.6A | 6W (Tc = 25°C) | 175 | 100 | 25 | 10-180 | 10 | 0.1A | | | | | | | F-271 |
| 2SC 1607 | RF | Si.EP | 40 | 3.5 | 100 | 180 | 175 | 100 | 20 | 50 | 5 | 50 | 12.5 | −10 | | | 4 | | F-50C |
| 2SC 1608 | PA | " | 40 | 3.5 | 500 | 5W (Tc = 25°C) | 175 | 100 | 20 | 50 | 5 | 200 | | | | | 5 | | F-231 |
| 2SC 1609 | | | | | | | | | | | | | | | | | | | |
| 2SC 1610 | | | | | | | | | | | | | | | | | | | |
| 2SC 1611 | | | | | | | | | | | | | | | | | | | |
| 2SC 1612 | | | | | | | | | | | | | | | | | | | |
| 2SC 1613 | | | | | | | | | | | | | | | | | | | |
| 2SC 1614 | | | | | | | | | | | | | | | | | | | |
| 2SC 1615 | | | | | | | | | | | | | | | | | | | |
| 2SC 1616 | | | | | | | | | | | | | | | | | | | |
| 2SC 1617 | PA | Si.TMe | 300 | 5 | 7A | 50W (Tc = 25°C) | 150 | 1mA | 250 | 30-150 | 5 | 1A | 5 | −500 | | 10* | 100 | 100* | F-102 |
| 2SC 1618 | " | " | 80 | 6 | 6A | 50W (Tc = 25°C) | 150 | 1mA | 80 | 60 | 4 | 3A | 12 | −500 | | 10* | 85 | 12* | F-102 |
| 2SC 1619 | " | " | 100 | 6 | 6A | 50W (Tc = 25°C) | 150 | 1mA | 100 | 60 | 4 | 3A | 12 | −500 | | 10* | 85 | 12* | F-102 |
| 2SC 1620 | PA | Si.EP | 36 | 3 | 600 | 10W (Tc = 25°C) | 175 | 100 | 15 | 50 | 13.5 | 100 | 13.5 | −150 | | 1200* | 7 | | F-227 |
| 2SC 1621 | SW | Si.E | 25 | 5 | 200 | 150 | 125 | 0.1 | 15 | 85 | 0.5 | 1 | | | | | | | F-176 |
| 2SC 1622 | RF.AF | Si.PaE | 30 | 5 | 30 | 150 | 125 | 0.05 | 25 | 400 | 3 | 0.5 | 3 | −1 | | 100* | 3.5 | 50 | F-176 |
| 2SC 1623 | " | Si.E | 50 | 5 | 100 | 150 | 125 | 0.1 | 40 | 200 | 6 | 1 | 6 | −1 | | 300* | 4.5 | 25* | F-176 |
| 2SC 1624 | RF.PA | Si.Eb | 120 | | 1A | 1.5W | 150 | 0.5 | 50 | 70-240 | 5 | 150 | 5 | −150 | | 30* | 20 | 5 | F-119 |
| 2SC 1625 | " | " | 100 | | 1A | 1.5W | 150 | 0.5 | 50 | 70-240 | 5 | 150 | 5 | −150 | | 30* | 20 | 5 | F-119 |
| 2SC 1626 | " | Si.EP | 80 | | 750 | 1.5W | 150 | 0.5 | 50 | 130 | 2 | 150 | 2 | −150 | | 100* | 15 | 5 | F-119 |
| 2SC 1627 | " | " | 70 | | 200 | 600 | 150 | 0.1 | 20 | 130 | 2 | 50 | 2 | −50 | | 150* | 6 | 5 | F-131 |
| 2SC 1628 | " | Si.TP | 180 | | 50 | 1W | 150 | 1 | 100 | 130 | 5 | 10 | 10 | −10 | | 120* | 3.5 | 10 | F-249 |
| 2SC 1629 | PA | Si.TMe | 90 | 6 | 8A | 50W (Tc = 25°C) | 150 | 1mA | 90 | 1000 | 4 | 1A | 12 | −500 | | 10* | 95 | 80* | F-102 |
| 2SC 1630 | RF | Si.E | 175 | 5 | 30 | 750 | 175 | 1 | 25 | 100 | 5 | 3 | 10 | −2 | | | 3 | Ccrbb' 40pS | F-84B |
| 2SC 1631 | RF.LN | Si.PaMe | 25 | 6 | 200 | 250 | 100 | 0.2 | 25 | 200 | 3 | 1 | 6 | −0.1 | 170 | | 4.5 | Ccrbb' 300pS | F-138 |
| 2SC 1632 | " | " | 50 | 6 | 200 | 250 | 100 | 0.2 | 25 | 200 | 3 | 1 | 6 | −0.1 | 170 | | 4.5 | Ccrbb' 300pS | F-138 |
| 2SC 1633 | " | " | 25 | 6 | 200 | 250 | 100 | 0.2 | 25 | 200 | 3 | 1 | | | | | 4.5 | Ccrbb' 300pS | F-138 |
| 2SC 1634 | " | " | 50 | 6 | 200 | 320 | 120 | 0.2 | 25 | 200 | 3 | 1 | | | | | 4.5 | Ccrbb' 300pS | F-138 |
| 2SC 1635 | | | | | | | | | | | | | | | | | | | |
| 2SD 1636 | LN.SW | Si.E | 50 | 25 | 20 | 300 | 120 | 0.2 | 20 | 500-2000 | 3 | 1 | 10 | −2 | | 30* | 4 | 300* | F-293 |
| 2SC 1637 | " | " | 50 | 25 | 20 | 250 | 120 | 0.2 | 50 | 66-525 | 3 | 1 | 10 | −1 | | 20* | 4 | Ccrbb' 30pS | F-293 |
| 2SC 1638 | RF | Si.EP | 40 | 3 | 300 | 600 | 175 | 0.5 | 20 | 100 | 10 | 20 | 10 | −20 | | 1400* | 3 | 40 | F-85C |
| 2SC 1639 | | | | | | | | | | | | | | | | | | | |
| 2SC 1640 | | | | | | | | | | | | | | | | | | | |
| 2SC 1641 | | | | | | | | | | | | | | | | | | | |
| 2SC 1642 | | | | | | | | | | | | | | | | | | | |
| 2SC 1643 | | | | | | | | | | | | | | | | | | | |
| 2SC 1644 | | | | | | | | | | | | | | | | | | | |
| 2SC 1645 | | | | | | | | | | | | | | | | | | | |
| 2SC 1646 | | | | | | | | | | | | | | | | | | | |
| 2SC 1647 | | | | | | | | | | | | | | | | | | | |
| 2SC 1648 | | | | | | | | | | | | | | | | | | | |
| 2SC 1649 | | | | | | | | | | | | | | | | | | | |
| 2SC 1650 | | | | | | | | | | | | | | | | | | | |
| 2SC 1651 | | | | | | | | | | | | | | | | | | | |
| 2SC 1652 | | | | | | | | | | | | | | | | | | | |
| 2SC 1653 | RF.SW | Si.E | 150 | | 5 | 150 | 125 | 0.1 | 100 | 130 | 3 | 15 | 10 | −10 | | 150* | 4.5 | 15 | F-176 |
| 2SC 1654 | " | " | 180 | 5 | 50 | 150 | 125 | 0.1 | 100 | | 3 | 15 | 10 | −10 | | 150* | 4.5 | 15 | F-176 |
| 2SC 1655 | | | | | | | | | | | | | | | | | | | |
| 2SC 1656 | | | | | | | | | | | | | | | | | | | |
| 2SC 1657 | | | | | | | | | | | | | | | | | | | |
| 2SC 1658 | | | | | | | | | | | | | | | | | | | |
| 2SC 1659 | RF.SW | Si.E | 20 | 3 | 80 | 500 | 200 | 0.1 | 10 | 100 | 5 | 30 | 6 | −30 | | 7000* | 0.6 | | F-306 |
| 2SC 1660 | " | " | 20 | 3 | 80 | 500 | 200 | 0.1 | 10 | 100 | 5 | 30 | 6 | −30 | | 7000* | 0.6 | | F-306 |

**Pin Configurations are 1. Emitter, 2. Base, 3. Collector, 4. Shield, unless otherwise specified. (Outline Dimensions: mm)**

| TYPE NO. | USES | MATERIAL STRUCTURE | $V_{CBO}$ (V) | $V_{EBO}$ (V) | Ic (mA) | Pd (mW) | Tj (°C) | $I_{CBO}$ (uA) | VALUE OF DC/PULSE | | | | BIAS | | hfe hfb* | fab fT (Mc) | Cob (pF) | $r_{bb'}$ $h_{ie(real)}$* (Ω) | CASE STYLE |
|---|---|---|---|---|---|---|---|---|---|---|---|---|---|---|---|---|---|---|---|
| | | | | | | | | | $V_{CB}$(V) | hFE | $V_{CE}$(V) | Ic(mA) | $V_{CB}$(V) | Ie(mA) | | | | | |
| 2SC 1661 | RF.SW | Si.E | 20 | 3 | 80 | 600 | 175 | 0.1 | 10 | 100 | 5 | 30 | 6 | −30 | | 7000* | 1 | | F-307 |
| 2SC 1662 | " | " | 20 | 3 | 80 | 600 | 200 | 0.1 | 10 | 100 | 5 | 30 | 6 | −30 | | 7000* | 1 | | F-308 |
| 2SC 1663 | PF.PA | " | 140 | 8 | 500 | 950 | 120 | 0.2 | 100 | 60-350 | 2 | 100 | 10 | −20 | | 50* | 15 | $Ccrbb'$ 190pS | F-174 |
| 2SC 1664 | PA | Si.TMe | 70 | 6 | 6A | 40W (Tc = 25°C) | 150 | 10 | 70 | 1200 | 4 | 1A | 10 | −0.5A | | 10* | 75 | 12 | F-99 |
| 2SC 1665 | RF.LN | Si.E | 25 | 3 | 20 | 200 | 175 | 0.05 | 12 | 120 | 8 | 5 | 8 | −5 | | 1400* | 0.5 | 40* | F-85B |
| 2SC 1666 | RF | " | 40 | 3 | 300 | 600 | 175 | 0.05 | 35 | 80 | 14 | 55 | 14 | −55 | | 700* | 2 | 25* | F-85B |
| 2SC 1667 | RF.PA | Si.EMe | 80 | 5 | 4A | 50W (Tc = 25°C) | 150 | 1mA | 50 | 100 | 4 | 1A | 10 | −0.5A | | 10* | 120 | 10 | F-102 |
| 2SC 1668 | PA | Si.EP | 35 | | 6A | 40W (Tc = 25°C) | 175 | 1mA | 15 | 40 | 5 | 1A | 10 | −200 | | 400* | 60 | 3* | F-135 |
| 2SC 1669 | " | Si.TMe | 150 | 5 | 1.5A | 25W (Tc = 25°C) | 150 | 20 | 100 | 40-240 | 10 | 500 | 10 | −500 | | 6* | 40 | 25 | F-119 |
| 2SC 1670 | AF.RF | Si.E | 140 | 8 | 500 | 750 | 120 | 0.2 | 100 | 50-350 | 2 | 100 | 10 | −20 | | 50* | 15 | | F-259 |
| 2SC 1671 | | | | | | | | | | | | | | | | | | | |
| 2SC 1672 | SW | Si.EMe | 150 | 6 | 25A | 120W (Tc = 25°C) | 175 | 10 | 150 | 30 | 2 | 13A | | | | | | | F-102 |
| 2SC 1673 | PA | Si.E | 35 | 3 | 300 | 7W (Tc = 25°C) | 200 | 5 | 20 | 60 | 10 | 100 | | | | | | | F-129 |
| 2SC 1674 | RF.Conv. Mix.Osc | " | 30 | 4 | 20 | 250 | 125 | 0.1 | 30 | 90 | 6 | 1 | 6 | −1 | | 600* | 1 | $Ccrbb'$ 12pS | F-138 |
| 2SC 1675 | " | " | 50 | 5 | 30 | 250 | 125 | 0.1 | 50 | 90 | 6 | 1 | 6 | −1 | | 250* | 1.9 | $Ccrbb'$ 10pS | F-138 |
| 2SC 1676 | PA | Si.EP | 50 | 4 | 3A | 30W (Tc = 25°C) | 175 | 100 | 20 | 40 | 5 | 1A | 10 | −300 | | 300* | 25 | 5* | F-260 |
| 2SC 1677 | " | Si.E | 50 | 4 | 5A | 45W (Tc = 25°C) | 175 | 200 | 20 | 40 | 5 | 1A | 10 | −400 | | 260* | 50 | 3* | F-260 |
| 2SC 1678 | " | " | 65 | 4 | 3A | 10W (Tc = 25°C) | 150 | 10 | 30 | 40 | 5 | 500 | 5 | −100 | | 150* | 30 | 5 | F-119 |
| 2SC 1679 | " | " | 65 | 4 | 1.5A | 10W (Tc = 25°C) | 150 | 10 | 30 | 30 | 5 | 500 | 5 | −100 | | 550* | 20 | 5 | F-119 |
| 2SC 1680 | " | Si.EP | 35 | 3.5 | 2A | 15W (Tc = 25°C) | 175 | 100 | 15 | 50 | 5 | 1A | 10 | −100 | | 400* | 19 | 10* | F-135 |
| 2SC 1681 | LN | " | 60 | 5 | 50 | 200 | 125 | 0.1 | 35 | 450 | 6 | 2 | 6 | −1 | 450 | 130* | NF = 3dB (f = 10Hz) | | F-33 |
| 2SC 1682 | " | " | 40 | 5 | 50 | 200 | 125 | 0.1 | 35 | 450 | 6 | 2 | 6 | −1 | 450 | 130* | NF = 1.5dB (f = 100Hz) | | |
| 2SC 1683 | PA | Si.TMe | 200 | 5 | 500 | 20W (Tc = 25°C) | 150 | 500 | 200 | 120 | 10 | 400 | 10 | −200 | | 6* | 35 | 25 | F-268 |
| 2SC 1684 | RF.AF | Si.EP | 30 | 7 | 100 | 250 | 135 | 1 | 10 | 250 | 10 | 2 | 10 | −2 | 250 | 150* | 3.5 | 70 | F-138 |
| 2SC 1685 | " | " | 60 | 7 | 100 | 250 | 135 | 1 | 10 | 250 | 10 | 2 | 10 | −2 | 250 | 150* | 3.5 | 70 | F-138 |
| 2SC 1686 | RF | Si.P | 40 | 4 | 25 | 250 | 135 | 10 | 40 | 80 | 10 | 4 | 10 | −4 | | 330* | 1 | $Ccrbb'$ 45pS | F-138E |
| 2SC 1687 | " | Si.EP | 40 | 4 | 30 | 400 | 135 | 10 | 40 | 100 | 10 | 7 | 10 | −5 | | 550* | 1.5 | $Ccrbb'$ 80pS | F-138E |
| 2SC 1688 | " | " | 50 | 4 | 30 | 400 | 135 | 10 | 50 | 100 | 10 | 7 | 10 | −5 | | 550* | 1.5 | $Ccrbb'$ 80pS | F-138E |
| 2SC 1689 | PA | " | 55 | 4 | 3A | 45W (Tc = 25°C) | 175 | 1mA | 40 | 50 | 10 | 100 | | | | | | | F-224 |
| 2SC 1690 | | | | | | | | | | | | | | | | | | | |
| 2SC 1691 | | | | | | | | | | | | | | | | | | | |
| 2SC 1692 | | | | | | | | | | | | | | | | | | | |
| 2SC 1693 | | | | | | | | | | | | | | | | | | | |
| 2SC 1694 | | | | | | | | | | | | | | | | | | | |
| 2SC 1695 | | | | | | | | | | | | | | | | | | | |
| 2SC 1696 | | | | | | | | | | | | | | | | | | | |
| 2SC 1697 | | | | | | | | | | | | | | | | | | | |
| 2SC 1698 | | | | | | | | | | | | | | | | | | | |
| 2SC 1699 | | | | | | | | | | | | | | | | | | | |
| 2SC 1700 | | | | | | | | | | | | | | | | | | | |
| 2SC 1701 | | | | | | | | | | | | | | | | | | | |
| 2SC 1702 | | | | | | | | | | | | | | | | | | | |
| 2SC 1703 | | | | | | | | | | | | | | | | | | | |
| 2SC 1704 | | | | | | | | | | | | | | | | | | | |
| 2SC 1705 | | | | | | | | | | | | | | | | | | | |
| 2SC 1706 | | | | | | | | | | | | | | | | | | | |
| 2SC 1707 | | | | | | | | | | | | | | | | | | | |
| 2SC 1708 | AF.LN.RF | Si.EP | 90 | 5 | 50 | 200 | 125 | 0.1 | 35 | 250-1200 | 6 | −1 | 6 | 1 | | 150* | 1.8 | | F-138B |
| 2SC 1709 | SW | " | 30 | 5 | 300 | 300 | 150 | 0.015 | 10 | 60 | 1 | 10 | | | | | | | F-275 |
| 2SC 1710 | RF | " | 15 | 3 | 130 | 1W (Tc = 25°C) | 175 | 0.5 | 10 | 80 | 6 | 60 | 6 | −60 | | 7GHZ* | 0.8 | 20* | F-261 |
| 2SC 1711 | LN | " | 20 | 3 | 30 | 200 | 175 | 0.5 | 10 | 80 | 8 | 10 | 8 | −10 | | 7.5GHz* | 0.25 | 30* | F-262 |
| 2SC 1712 | RF | " | 16 | 3 | 30 | 200 | 175 | 0.5 | 10 | 80 | 3 | 10 | 6 | −15 | | 8GHz* | 0.3 | 30* | F-262 |
| 2SC 1713 | Diff | " | 16 | 3 | 30 | 200 | 175 | 0.5 | 10 | 80 3 10 $hFE1/hFE2$ = 0.6-1.0 | | | 6 | −15 | | 8GHz* | 0.45 | 40* | F-263 |
| 2SC 1714 | " | " | 16 | 3 | 30 | 200 | 175 | 0.5 | 10 | 80 3 10 $hFE1/hFE2$ = 0.6-1.0 | | | 6 | −15 | | 8GHz* | 0.45 | 40* | F-264 |
| 2SC 1715 | " | " | 16 | 3 | 30 | 200 | 175 | 0.5 | 10 | 80 3 10 $hFE1/hFE2$ = 0.6-1.0 | | | 6 | −15 | | 8GHz* | 0.45 | 40* | F-265 |
| 2SC 1716 | " | " | 16 | 3 | 30 | 200 | 175 | 0.5 | 10 | 80 3 10 $hFE1/hFE2$ = 0.6-1.0 | | | 6 | −15 | | 8GHz* | 0.45 | 40* | F-264 |
| 2SC 1717 | PA | " | 40 | 4 | 1A | 10W (Tc = 25°C) | 175 | 1 | 15 | 50 | 5 | 100 | 10 | −50 | | 600* | 6.5 | 25* | F-97C |
| 2SC 1718 | " | " | 35 | 3.5 | 4.5A | 30W (Tc = 25°C) | 175 | 100 | 15 | 50 | 5 | 1.5A | 10 | −200 | | 600* | 35 | 4* | F-135 |
| 2SC 1719 | RF | Si.EP | 150 | 5 | 50 | 1W | 175 | 1 | 140 | 150 | 5 | 10 | 5 | −10 | | 130* | 2 | | F-90 |
| 2SC 1720 | " | " | 150 | 5 | 50 | 1W | 175 | 1 | 140 | 150 | 5 | 10 | 5 | −10 | | 130* | 2 | | F-90 |

**Pin Configurations are 1. Emitter, 2. Base, 3. Collector, 4. Shield, unless otherwise specified. (Outline Dimensions: mm)**

| TYPE NO. | USES | MATERIAL STRUCTURE | $V_{CBO}$ (V) | $V_{EBO}$ (V) | Ic (mA) | Pd (mW) | Tj (°C) | $I_{CBO}$ (uA) | VALUE OF DC/PULSE | | | | BIAS | | hfe hfb* | fab fT (Mc) | Cob (pF) | $r_{bb'}$ $h_{ie(real)}$* (Ω) | CASE STYLE |
|---|---|---|---|---|---|---|---|---|---|---|---|---|---|---|---|---|---|---|---|
| | | | | | | | | | $V_{CB}$(V) | hFE | $V_{CE}$(V) | $I_C$(mA) | $V_{CB}$(V) | $I_e$(mA) | | | | | |
| 2SC 1721 | RF | Si.EP | 80 | 5 | 1A | 500 | 150 | 1 | 60 | 35 | 2 | 500 | 10 | −50 | | 100* | | | F-138 |
| 2SC 1722 | " | Si.T | 300 | 5 | 200 | 1.8W | 150 | 0.1 | 250 | 120 | 10 | 50 | 20 | −30 | | 80* | 4 | 20* | F-268 |
| 2SC 1723 | " | " | 300 | 5 | 200 | 15W (Tc = 25°C) | 150 | 0.1 | 250 | 100 | 10 | 50 | 20 | −30 | | 80* | 6 | 20* | F-268 |
| 2SC 1724 | PA | Si.EP | 35 | 3.5 | 800 | 7.5W (Tc = 25°C) | 175 | 500 | 15 | 100 | 5 | 500 | 10 | −100 | | 2000* | 10 | 4* | F-135 |
| 2SC 1725 | " | " | 35 | 3.5 | 1.4A | 15W (Tc = 25°C) | 175 | 1mA | 15 | 100 | 5 | 1A | 10 | −100 | | 1600* | 15 | 3.5* | F-135 |
| 2SC 1726 | " | " | 35 | 3.5 | 2.8A | 30W (Ic = 25°C) | 175 | 1.5mA | 15 | 100 | 5 | 1.5A | 10 | −100 | | 1200* | 25 | 3* | F-135 |
| 2SC 1727 | RF.Conv. Mix.Osc.LN | Si.E | 35 | 3 | 25 | 300 | 100 | 0.2 | 15 | 50-350 | 10 | 4 | 10 | −4 | | 700* | 1.2 | $C_{rbb'}$ 10pS | F-138C |
| 2SC 1728 | RF.PA | " | 100 | 6 | 1A | 950 | 120 | 0.2 | 25 | 250 | 2 | 100 | 2 | −10 | | 80* | 16 | $C_{rbb'}$ 300pS | F-174 |
| 2SC 1729 | PA | Si.EP | 35 | 4 | 3.5A | 35W (Ic = 25°C) | 175 | 1mA | 25 | 50 | 10 | 100 | | | | | | | F-272 |
| 2SC 1730 | | | | | | | | | | | | | | | | | | | |
| 2SC 1731 | Diff.SW | Si.E | 20 | 3 | 50 | 300 | 200 | 0.1 | 10 | 30-300 | 5 | 10 | 5 | −15 | | 3000* | 1.1 | | F-309A |
| 2SC 1732 | | | | | | | | | | | | | | | | | | | |
| 2SC 1733 | Diff. | Si.E | 30 | 3 | 50 | 300 | 200 | 0.05 | 15 | 80 | 10 | 10 | 10 | −10 | | 2000* | 1.1 | | F-310 |
| 2SC 1734 | RF | Si.EP | 40 | 6 | 30 | 100 | 150 | 0.01 | 20 | 200 | 6 | 0.1 | 10 | −10 | | 300* | 2.5 | 40* | F-49C |
| 2SC 1735 | AF.Drive | " | 100 | 4 | 500 | 800 | 125 | 1 | 50 | 50-300 | 10 | 10 | 10 | −10 | | 130* | 6.5 | | F-242 |
| 2SC 1736 | | | | | | | | | | | | | | | | | | | |
| 2SC 1737 | | | | | | | | | | | | | | | | | | | |
| 2SC 1738 | | | | | | | | | | | | | | | | | | | |
| 2SC 1739 | | | | | | | | | | | | | | | | | | | |
| 2SC 1740 | | | | | | | | | | | | | | | | | | | |
| 2SC 1741 | | | | | | | | | | | | | | | | | | | |
| 2SC 1742 | LN | Si.EP | 20 | 2 | 30 | 150 | 175 | 0.1 | 10 | 120 | 5 | 10 | 5 | −10 | | 6500* | 0.66 | 15* | |
| 2SC 1743 | " | " | 20 | 3 | 30 | 175 | 175 | 1 | 10 | 70 | 10 | 10 | 10 | −10 | | 4500* | 0.75 | 12* | F-280 |
| 2SC 1744 | PA | " | 35 | 3.5 | 10A | 70W (Tc = 25°C) | 175 | 2mA | 15 | 50 | 5 | 2A | 10 | −400 | | 200* | 110 | 1* | F-193 |
| 2SC 1745 | RF.LN | Si.EP | 60 | 5 | 50 | 150 | 150 | 0.1 | 35 | 450 | 6 | 2 | 6 | −1 | | 140* | 2 | 60 | F-49C |
| 2SC 1746 | " | " | 50 | 5 | 50 | 150 | 150 | 0.1 | 35 | 450 | 6 | 2 | 6 | −1 | | 140* | 2 | 60 | F-49C |
| 2SC 1747 | RF | Si.EP | 40 | 3 | 100 | 300 | 175 | 1 | 10 | 70 | 10 | 20 | 10 | −20 | | 2000* | 1.3 | 60* | F-50C |
| 2SC 1748 | | | | | | | | | | | | | | | | | | | |
| 2SC 1749 | PA | Si.TP | 300 | 5 | 100 | 10W (Tc = 25°C) | 150 | 1 | 150 | 130 | 10 | 25 | 10 | −10 | | 90* | 4 | $C_{rbb'}$ 45pS | F-180 |
| 2SC 1750 | | | | | | | | | | | | | | | | | | | |
| 2SC 1751 | | | | | | | | | | | | | | | | | | | |
| 2SC 1752 | RF | Si.E | 300 | 6 | 500 | 625 | 150 | 0.1 | 200 | 125 | 10 | 10 | 20 | −10 | | 80* | 1.7 | $C_{rbb'}$ 300pS | F-138D |
| 2SC 1753 | " | " | 200 | 6 | 500 | 625 | 150 | 0.1 | 160 | 125 | 10 | 10 | 20 | −10 | | 80* | 1.7 | $C_{rbb'}$ 300pS | F-138D |
| 2SC 1754 | " | " | 40 | 12 | 500 | 625 | 150 | 0.05 | 30 | 100k | 5 | 10 | 5 | −10 | | 240* | 5.4 | 1M* | F-138D |
| 2SC 1755 | PA | Si.TP | 300 | 7 | 200 | 15W (Tc = 25°C) | 150 | 0.1 | 200 | 80 | 10 | 10 | 30 | −10 | | 80* | 4 | 200* | F-268 |
| 2SC 1756 | " | " | 300 | 7 | 200 | 15W (Tc = 25°C) | 150 | 0.1 | 200 | 80 | 10 | 10 | 30 | −10 | | 80* | 4 | 200* | F-300 |
| 2SC 1757 | " | " | 300 | 7 | 200 | 15W (Tc = 25°C) | 150 | 0.1 | 200 | 80 | 10 | 10 | 30 | −10 | | 80* | 4 | 200* | F-267 |
| 2SC 1758 | | | | | | | | | | | | | | | | | | | |
| 2SC 1759 | | | | | | | | | | | | | | | | | | | |
| 2SC 1760 | RF.PA | Si.E | 100 | 6 | 1A | 950 | 150 | 0.1 | 25 | 250 | 2 | 100 | 2 | −10 | | 80* | 16 | $C_{rbb'}$ 300pS | F-174B |
| 2SC 1761 | " | " | 20 | 6 | 2A | 950 | 120 | 0.1 | 16 | 320 | 2 | 100 | 2 | −10 | | 80* | 30 | $C_{rbb'}$ 300pS | F-174B |
| 2SC 1762 | SW | Si.T | 700 | 12 | 300 | 470 | 150 | 2 | 100 | 50 | 5 | 10 | 5 | −10 | | 13* | 8,5 | $C_{rbb'}$ 200pS | F-84C |
| 2SC 1763 | PA | Si.EP | 65 | 4 | 7A | 80W (Tc = 25°C) | 175 | 1mA | 30 | 40 | 10 | 5A | 15 | −100 | | 100* | 110 | 8* | F-281 |
| 2SC 1764 | " | " | 65 | 4 | 12A | 140W (Tc = 25°C) | 175 | 6mA | 30 | 40 | 10 | 10A | 15 | −200 | | 100* | 220 | 5* | F-281 |
| 2SC 1765 | | | | | | | | | | | | | | | | | | | |
| 2SC 1766 | | | | | | | | | | | | | | | | | | | |
| 2SC 1767 | | | | | | | | | | | | | | | | | | | |
| 2SC 1768 | PA | Si.TMe | 200 | 6 | 5A | 50W (Tc = 25°C) | 150 | 1mA | 200 | 1000 | 4 | 1A | 12 | −500 | | 15* | 50 | 100* | F-102 |
| 2SC 1769 | RF.LN | Si.EP | 30 | 5 | 50 | 200 | 125 | 0.05 | 20 | 250 | 6 | 1 | 6 | −0.1 | | 200* | 2 | $C_{rbb'}$ 60pS | F-138D |
| 2SC 1770 | RF.AF | " | 30 | 5 | 200 | 300 | 125 | 0.1 | 20 | 250 | 6 | 1 | 6 | −1 | | 100* | 5 | $C_{rbb'}$ 40pS | F-138D |
| 2SC 1771 | RF | " | 60 | 5 | 200 | 300 | 125 | 0.1 | 20 | 250 | 6 | 1 | 10 | −2 | | 100* | 5 | $C_{rbb'}$ 40pS | F-138D |
| 2SC 1772 | " | " | 95 | 5 | 50 | 300 | 125 | 0.1 | 20 | 250 | 6 | 1 | 10 | −2 | | 40* | 5 | $C_{rbb'}$ 40pS | F-138D |
| 2SC 1773 | " | " | 30 | 5 | 400 | 500 | 125 | 0.5 | 20 | 200 | 1 | 100 | 10 | −5 | | 100* | 6 | $C_{rbb'}$ 50pS | F-138D |
| 2SC 1774 | " | " | 60 | 5 | 400 | 500 | 125 | 0.5 | 20 | 200 | 1 | 100 | 10 | −5 | | 100* | 6 | $C_{rbb'}$ 50pS | F-138D |
| 2SC 1775 | " | " | 90 | 5 | 50 | 200 | 125 | 0.5 | 75 | 700 | 12 | 2 | 12 | −2 | | 200* | 1.6 | $C_{rbb'}$ 12pS | F-138 |
| 2SC 1776 | " | " | 60 | 6 | 200 | 300 | 150 | 0.5 | 40 | 150 | 1 | 10 | 10 | −10 | | 220* | 3 | 40* | F-275 |
| 2SC 1777 | PA | Si.EMe | 70 | 6 | 6A | 50W (Tc = 25°C) | 150 | 1mA | 70 | 60 | 4 | 5A | 12 | −500 | | 10* | 90 | 12* | F-102 |
| 2SC 1778 | RF.Conv Osc | Si.P | 25 | 3 | 15 | 150 | 125 | 100 | 25 | 50 | 10 | 3 | 10 | −3 | | 650* | 1 | 30* | F-138E |
| 2SC 1779 | RF | " | 30 | 3 | 20 | 150 | 125 | 100 | 30 | 50 | 10 | 2 | 10 | −2 | | 675* | 1.5 | 60* | F-138E |
| 2SC 1780 | " | Si.EP | 25 | 3 | 15 | 150 | 125 | 100 | 25 | 50 | 10 | 2 | 10 | −3 | | 3000* | 1.5 | 20 | F-276 |

**Pin Configurations are 1. Emitter, 2. Base, 3. Collector, 4. Shield, unless otherwise specified. (Outline Dimensions: mm)**

| TYPE NO. | USES | MATERIAL STRUCTURE | $V_{CBO}$ (V) | $V_{EBO}$ (V) | $I_C$ (mA) | Pd (mW) | Tj (°C) | $I_{CBO}$ (uA) | VALUE OF DC/PULSE | | | | BIAS | | hfe hfb* | fab fT (Mc) | Cob (pF) | $r_{bb'}$ $h_{ie(real)}$* (Ω) | CASE STYLE |
|---|---|---|---|---|---|---|---|---|---|---|---|---|---|---|---|---|---|---|---|
| | | | | | | | | | $V_{CB}$(V) | hFE | $V_{CE}$(V) | $I_C$(mA) | $V_{CB}$(V) | $I_E$(mA) | | | | | |
| 2SC 1781 | RF | Si.P | 70 | 5 | 500 | 350 | 175 | 0.5 | 50 | 160 | 3 | 10 | 3 | —10 | | 150* | 6 | 350* | F-49C |
| 2SC 1782 | PA | Si.TMe | 140 | 6 | 10A | 100W (Tc = 25°C) | 150 | 100 | 140 | 60 | 4 | 3A | 12 | —500 | | 10* | 165 | 13* | F-102 |
| 2SC 1783 | " | " | 180 | 6 | 10A | 100W (Tc = 25°C) | 150 | 100 | 180 | 60 | 4 | 3A | 12 | —500 | | 10* | 165 | 13* | F-102 |
| 2SC 1784 | " | " | 150 | 6 | 15A | 100W (Tc = 25°C) | 150 | 100 | 150 | 20 | 4 | 5A | | | | | | | F-102 |
| 2SC 1785 | " | " | 200 | 6 | 15A | 100W (Tc = 25°C) | 150 | 100 | 200 | 20 | 4 | 5A | | | | | | | F-102 |
| 2SC 1786 | " | " | 230 | 6 | 15A | 100W (Tc = 25°C) | 150 | 100 | 230 | 20 | 4 | 5A | | | | | | | F-102 |
| 2SC 1787 | RF.LN | Si.EP | 35 | 5 | 30 | 150 | 125 | 0.1 | 10 | 540 | 5 | 2 | 10 | —1 | | 150* | 2.2 | 70 | F-276 |
| 2SC 1788 | PA | " | 25 | 7 | 500 | 600 | 135 | 10 | 25 | 160 | 2 | 500 | 10 | —50 | | 150 | 6 | 3.5k | F-138 |
| 2SC 1789 | RF.Mix | " | 25 | 3 | 50 | 200 | 125 | 0.1 | 25 | 100 | 10 | 2 | 10 | —10 | | 1200* | 1.05 | 20 | F-138 |
| 2SC 1790 | RF | " | 25 | 3 | 15 | 150 | 175 | 100 | 25 | 50 | 10 | 2 | 10 | —3 | | 3000* | 1.2 | 20 | F-50C |
| 2SC 1791 | | | | | | | | | | | | | | | | | | | |
| 2SC 1792 | PA | Si.E | 45 | 4 | 2A | 22W (Tc = 25°C | 200 | 1mA | 18 | 60 | 10 | 500 | 10 | —600 | | 800* | <14 | | F-184 |
| 2SC 1793 | | | | | | | | | | | | | | | | | | | |
| 2SC 1794 | | | | | | | | | | | | | | | | | | | |
| 2SC 1795 | | | | | | | | | | | | | | | | | | | |
| 2SC 1796 | | | | | | | | | | | | | | | | | | | |
| 2SC 1797 | | | | | | | | | | | | | | | | | | | |
| 2SC 1798 | | | | | | | | | | | | | | | | | | | |
| 2SC 1799 | | | | | | | | | | | | | | | | | | | |
| 2SC 1800 | | | | | | | | | | | | | | | | | | | |
| 2SC 1801 | RF | Si.EP | 30 | 3 | 30 | 150 | 125 | 0.5 | 15 | 60 | 10 | 5 | 10 | —10 | | 1300* | 1 | $C_{rbb'}$ 6 pS | F-138D |
| 2SC 1802 | " | " | 30 | 3 | 20 | 150 | 125 | 0.5 | 15 | 60 | 6 | 2 | 10 | —2 | | 700* | 1 | $C_{rbb'}$ 2.5pS | F-138D |
| 2SC 1803 | | | | | | | | | | | | | | | | | | | |
| 2SC 1804 | PA | Si.EP | 47 | 4 | 1A | 10W (Tc = 25°C | 175 | 200 | 30 | 50 | 25 | 100 | | | | | | | F-273 |
| 2SC 1805 | " | " | 45 | 4 | 2A | 30W (Tc = 25°C) | 175 | 1mA | 35 | 50 | 25 | 100 | | | | | | | F-273 |
| 2SC 1806 | " | " | 45 | 4 | 4A | 50W (Tc = 25°C) | 175 | 2mA | 35 | 50 | 25 | 200 | | | | | | | F-273 |
| 2SC 1807 | RF.PA | " | 18 | 4 | 0.1A | 300 | 175 | 30 | 10 | 10-180 | 7.2 | 20 | | | | | | | |
| 2SC 1808 | " | " | 35 | 3.5 | 1A | 10W (Tc = 25°C | 175 | 100 | 15 | 10-180 | 10 | 0.1A | | | | | | | F-274 |
| 2SC 1809 | | | | | | | | | | | | | | | | | | | |
| 2SC 1810 | PA | Si.T | 700 | 12 | 300 | 950 | 120 | 2 | 12 | 50 | 5 | 10 | 10 | —10 | | 13* | 8.5 | $C_{rbb'}$ 170pS | F-174B |
| 2SC 1811 | RF | Si.E | 240 | 5 | 100 | 750 | 120 | 0.2 | 100 | 150 | 5 | 3 | 10 | —20 | | | 2.4 | $C_{rbb'}$ 45pS | F-259 |
| 2SC 1812 | " | | 22 | 3 | 20 | 210 | 100 | 0.2 | 15 | 80 | 10 | 3 | 10 | —3 | | 1100* | 0.75 | $C_{rbb'}$ 3.5pS | F-305 |
| 2SC 1813 | " | Si.E PaMe | 50 | 5 | 500 | 500 | 120 | 0.2 | 49 | 200 | 2 | 100 | 10 | —10 | | 100* | 8 | $C_{rbb'}$ 110pS | F-138D |
| 2SC 1814 | | | | | | | | | | | | | | | | | | | |
| 2SC 1815 | | | | | | | | | | | | | | | | | | | |
| 2SC 1816 | RF.PA | Si.E PaMe | 100 | 6 | 4A | 16W (Tc = 25°C | 150 | 1 | 50 | 100 | 2 | 100 | 10 | —100 | | 140* | 45 | $C_{rbb'}$ 35pS | F-240 |
| 2SC 1817 | " | Si.E | 45 | 4 | 5A | 25W (Tc = 25°C | 150 | 2 | 40 | 25-140 | 2 | 100 | 10 | —1A | | 250* | 80 | | F-240 |
| 2SC 1818 | PA | Si.EMe | 130 | 5 | 7A | 100W (Tc = 25°C) | 150 | 500 | 70 | 150 | 5 | 7A | 10 | —500 | | 7* | 400 | 10 | F-102 |
| 2SC 1819 | " | Si.TP | 300 | 5 | 100 | 15W (Tc = 25°C) | 150 | 10 | 300 | 100 | 10 | 30 | 30 | —20 | | 100* | 4.5 | 15 | F-268 |
| 2SC 1820 | RF.PA | Si.EP | 55 | 3.5 | 500 | 3W (Tc = 25°C) | 175 | 100 | 20 | 50 | 5 | 200 | | | | | 4 | | F-84B |
| 2SC 1821 | " | " | 55 | 3.5 | 500 | 7W (Tc = 25°C) | 175 | 100 | 20 | 50 | 5 | 200 | | | | | 4.5 | | F-246 |
| 2SC 1822 | " | " | 55 | 3.5 | 1A | 12W (Tc = 25°C) | 175 | 200 | 20 | 50 | 5 | 500 | | | | | 7 | | F-246 |
| 2SC 1823 | " | " | 55 | 3.5 | 2A | 25W (Tc = 25°C) | 175 | 400 | 20 | 50 | 5 | 1A | | | | | 12 | | F-246 |
| 2SC 1824 | " | " | 55 | 3.5 | 4A | 40W (Tc = 25°C) | 175 | 800 | 20 | 50 | 5 | 3A | | | | | 23 | | F-246 |
| 2SC 1825 | " | " | 55 | 3.5 | 8A | 75W (Tc = 25°C) | 175 | 1.6mA | 20 | 50 | 5 | 6A | | | | | 45 | | F-294 |
| 2SC 1826 | PA | Si.TMe | 80 | 6 | 4A | 30W (Tc = 25°C) | 150 | 1mA | 80 | 100 | 4 | 1A | 12 | —200 | | 10* | 40 | 20* | F-298 |
| 2SC 1827 | " | " | 100 | 6 | 4A | 30W (Tc = 25°C) | 150 | 1mA | 100 | 100 | 4 | 1A | 12 | —200 | | 10* | 40 | 20* | F-298 |
| 2SC 1828 | " | " | 800 | 6 | 1A | 40W (Tc = 25°C) | 150 | 100 | 800 | 70 | 10 | 200 | 10 | —100 | | 7* | 20 | 12* | F-99 |
| 2SC 1829 | " | " | 200 | 6 | 5A | 100W (Tc = 25°C) | 150 | 1mA | 200 | 1000 | 4 | 1A | 12 | —500 | | 15* | 50 | 100* | F-102 |
| 2SC 1830 | " | " | 140 | 7 | 15A | 150W (Tc = 25°C) | 150 | 100 | 140 | 500 | 2 | 8A | 12 | —500 | | 10* | | | F-102 |
| 2SC 1831 | " | " | 90 | 6 | 8A | 100W (Tc = 25°C) | 150 | 1mA | 90 | 100 | 4 | 1A | 12 | —500 | | 10* | | | F-102 |
| 2SC 1832 | " | " | 500 | 6 | 15A | 150W (Tc = 25°C) | 150 | 100 | 500 | 500 | 2 | 10A | 12 | -500 | | 7* | | | F-102 |
| 2SC 1833 | RF.SW | Si.E | 60 | 8 | 200 | 300 | 150 | 0.1 | 40 | 160 | 1 | 10 | 10 | —10 | | 300* | 3.5 | | F-138 |
| 2SC 1834 | | | | | | | | | | | | | | | | | | | |
| 2SC 1835 | | | | | | | | | | | | | | | | | | | |
| 2SC 1836 | | | | | | | | | | | | | | | | | | | |
| 2SC 1837 | | | | | | | | | | | | | | | | | | | |
| 2SC 1838 | | | | | | | | | | | | | | | | | | | |
| 2SC 1839 | | | | | | | | | | | | | | | | | | | |
| 2SC 1840 | | | | | | | | | | | | | | | | | | | |

Pin Configurations are 1. Emitter, 2. Base, 3. Collector, 4. Shield, unless otherwise specified. (Outline Dimensions: mm)

| TYPE NO. | USES | MATERIAL STRUCTURE | $V_{CBO}$ (V) | $V_{EBO}$ (V) | Ic (mA) | Pd (mW) | Tj (°C) | $I_{CBO}$ (uA) | VALUE OF DC/PULSE | | | | BIAS | | hfe hfb* | fab fT (Mc) | Cob (pF) | $r_{bb'}$ $h_{ie(real)}$* (Ω) | CASE STYLE |
|---|---|---|---|---|---|---|---|---|---|---|---|---|---|---|---|---|---|---|---|
| | | | | | | | | | $V_{CB}$(V) | hFE | $V_{CE}$(V) | $I_C$(mA) | $V_{CB}$(V) | $I_e$(mA) | | | | | |
| 2SC 1841 | | | | | | | | | | | | | | | | | | | |
| 2SC 1842 | | | | | | | | | | | | | | | | | | | |
| 2SC 1843 | | | | | | | | | | | | | | | | | | | |
| 2SC 1844 | | | | | | | | | | | | | | | | | | | |
| 2SC 1845 | | | | | | | | | | | | | | | | | | | |
| 2SC 1846 | PA | Si.EP | 45 | 5 | 1A | 1.2W | 150 | 0.1 | 20 | 160 | 10 | 500 | 10 | —50 | | 200* | 15 | 3.5K | F-222 |
| 2SC 1847 | " | " | 50 | 5 | 1.5A | 1.2W | 150 | 1 | 20 | 120 | 5 | 1A | 5 | —500 | | 150* | 50 | 3.3K | F-222 |
| 2SC 1848 | " | " | 70 | 5 | 2A | 1.2W | 150 | 1 | 40 | 130 | 5 | 1A | 5 | —500 | | 150* | 50 | 3k* | F-161 |
| 2SC 1849 | RF.AF | " | 30 | 5 | 100 | 350 | 135 | 1 | 10 | 250 | 10 | 2 | 10 | —2 | 250 | 150* | 3.5 | 70 | F-138D |
| 2SC 1850 | " | " | 60 | 5 | 100 | 350 | 135 | 1 | 10 | 250 | 10 | 2 | 10 | —2 | 250 | 150* | 3.5 | 70 | F-138D |
| 2SC 1851 | PA | " | 30 | 5 | 500 | 625 | 135 | 0.1 | 20 | 160 | 10 | 150 | 10 | —50 | | 200* | 6 | 3.5k | F-138D |
| 2SC 1852 | " | " | 60 | 5 | 500 | 625 | 135 | 0.1 | 20 | 160 | 10 | 150 | 10 | —50 | | 200* | 6 | 3.5K | F-138D |
| 2SC 1853 | RF.Conv.Mix Osc | " | 30 | 5 | 30 | 250 | 125 | 1 | 10 | 250 | 10 | 1 | 10 | —1 | | 230* | 1.3 | 35 | F-138 |
| 2SC 1854 | RF.AF | " | 30 | 5 | 50 | 250 | 125 | 1 | 10 | 200 | 5 | 2 | 5 | —2 | 220 | 150* | 2.2 | 70 | F-138 |
| 2SC 1855 | RF | Si.P | 20 | 3 | 20 | 250 | 125 | 0.1 | 16 | 60 | 10 | 2 | 10 | —2 | | 550* | 0.9 | 500* | F-138C |
| 2SC 1856 | " | " | 20 | 3 | 20 | 250 | 125 | 0.1 | 16 | 60 | 10 | 2 | 10 | —2 | | 550* | 0.9 | 70* | F-138C |
| 2SC 1857 | | | | | | | | | | | | | | | | | | | |
| 2SC 1858 | | | | | | | | | | | | | | | | | | | |
| 2SC 1859 | RF | Si.E PaMe | 25 | 5 | 1.5A | 500 | 120 | 0.2 | 24 | 180 | 2 | 100 | 10 | —10 | | 140* | 15 | Ccrbb' 250pS | F-138 |
| 2SC 1860 | | | | | | | | | | | | | | | | | | | |
| 2SC 1861 | | | | | | | | | | | | | | | | | | | |
| 2SC 1862 | | | | | | | | | | | | | | | | | | | |
| 2SC 1863 | | | | | | | | | | | | | | | | | | | |
| 2SC 1864 | | | | | | | | | | | | | | | | | | | |
| 2SC 1865 | | | | | | | | | | | | | | | | | | | |
| 2SC 1866 | | | | | | | | | | | | | | | | | | | |
| 2SC 1867 | | | | | | | | | | | | | | | | | | | |
| 2SC 1868 | | | | | | | | | | | | | | | | | | | |
| 2SC 1869 | | | | | | | | | | | | | | | | | | | |
| 2SC 1870 | | | | | | | | | | | | | | | | | | | |
| 2SC 1871 | | | | | | | | | | | | | | | | | | | |
| 2SC 1872 | | | | | | | | | | | | | | | | | | | |
| 2SC 1873 | | | | | | | | | | | | | | | | | | | |
| 2SC 1874 | | | | | | | | | | | | | | | | | | | |
| 2SC 1875 | SW | Si.TMe | 1500 | 6 | 3.5A | 50W ($T_C$ = 25°C) | 150 | 20 | 1000 | 19 | 10 | 500 | | | | | | | F-102 |
| 2SC 1876 | | | | | | | | | | | | | | | | | | | |
| 2SC 1877 | | | | | | | | | | | | | | | | | | | |
| 2SC 1878 | | | | | | | | | | | | | | | | | | | |
| 2SC 1879 | | | | | | | | | | | | | | | | | | | |
| 2SC 1880 | | | | | | | | | | | | | | | | | | | |
| 2SC 1881 | | | | | | | | | | | | | | | | | | | |
| 2SC 1882 | | | | | | | | | | | | | | | | | | | |
| 2SC 1883 | | | | | | | | | | | | | | | | | | | |
| 2SC 1884 | | | | | | | | | | | | | | | | | | | |
| 2SC 1885 | RF | Si.EP | 150 | 5 | 50 | 750 | 135 | 1 | 100 | 150 | 5 | 10 | 10 | —10 | | 200* | 2 | 3.5k* | F-165 |
| 2SC 1886 | RF.Mix.Osc | " | 30 | 2 | 50 | 200 | 125 | 0.5 | 10 | 80 | 10 | 10 | 10 | —10 | | 1000* | 1.2 | Ccrbb' 10pS | F-138 |
| 2SC 1887 | RF.Osc | " | 30 | 2 | 50 | 200 | 125 | 0.5 | 10 | 80 | 10 | 10 | 10 | —10 | | 1100* | 1.2 | Ccrbb' 10pS | F-138 |
| 2SC 1888 | PA | Si.TMe | 80 | 6 | 3A | 800 | 150 | 100 | 80 | 1000 | 5 | 100 | 5 | —100 | | 15* | 35 | 250* | F-84B |
| 2SC 1889 | " | " | 100 | 6 | 3A | 800 | 150 | 100 | 100 | 1000 | 5 | 100 | 5 | —100 | | 15* | 35 | 250* | F-84B |
| 2SC 1890 | | | | | | | | | | | | | | | | | | | |
| 2SC 1891 | PA | Si.TMe | 1200 | 5 | 1.5A | 50W ($T_C$ = 25°C) | 150 | 1mA | 1200 | 20 | 10 | 500 | 10 | —100 | | 3.5* | 50 | 10 | F-102 |
| 2SC 1892 | " | " | 1500 | 5 | 2.5A | 50W ($T_C$ = 25°C) | 150 | 1mA | 1500 | 20 | 10 | 1A | 10 | —100 | | 3.5* | 70 | 10 | F-102 |
| 2SC 1893 | " | " | 1500 | 5 | 3.5A | 50W ($T_C$ = 25°C) | 150 | 1mA | 1500 | 20 | 10 | 1A | 10 | —100 | | 3.5* | 90 | 10 | F-102 |
| 2SC 1894 | " | " | 1500 | 5 | 5A | 50W ($T_C$ = 25°C) | 150 | 1mA | 1500 | 20 | 10 | 2A | 10 | —100 | | 4* | 110 | 10 | F-102 |
| 2SC 1895 | " | " | 1500 | 5 | 6A | 50W ($T_C$ = 25°C) | 150 | 1mA | 1500 | 20 | 10 | 2A | 10 | —100 | | 4* | 110 | 10 | F-102 |
| 2SC 1896 | " | " | 1500 | 5 | 7A | 50W ($T_C$ = 25°C) | 150 | 1mA | 1500 | 20 | 10 | 2A | 10 | —100 | | 4* | 110 | 10 | F-102 |
| 2SC 1897 | RF | Si.EP | 30 | 6 | 1A | 600 | 125 | 0.5 | 20 | 200 | 1 | 100 | 10 | —50 | | 200* | 20 | Ccrbb' 100pS | F-138 |
| 2SC 1898 | " | " | 30 | 4 | 30 | 200 | 125 | 0.5 | 20 | 90 | 6 | 1 | 10 | —2 | | 500* | 0.9 | Ccrbb' 8 pS | F-138C |
| 2SC 1899 | " | Si.P | 30 | 4 | 20 | 200 | 125 | 0.5 | 20 | 90 | 6 | 1 | 10 | —2 | | 500* | 0.9 | Ccrbb' 8 pS | F-138C |
| 2SC 1900 | RF.LN | " | 120 | 6 | 50 | 300 | 125 | 0.05 | 20 | 300 | 6 | 1 | 6 | —0.1 | | 90* | 2 | Ccrbb' 50pS | F-138 |

**Pin Configurations are 1. Emitter, 2. Base, 3. Collector, 4. Shield, unless otherwise specified. (Outline Dimensions: mm)**

| TYPE NO. | USES | MATERIAL STRUCTURE | $V_{CBO}$ (V) | $V_{EBO}$ (V) | $I_C$ (mA) | Pd (mW) | Tj (°C) | $I_{CBO}$ (uA) | $V_{CB}$(V) | VALUE OF DC/PULSE hFE | $V_{CE}$(V) | $I_C$(mA) | BIAS $V_{CB}$(V) | $I_e$(mA) | hfe hfb* | fab fT (Mc) | Cob (pF) | $r_{bb'}$ $h_{ie(real)}$* (Ω) | CASE STYLE |
|---|---|---|---|---|---|---|---|---|---|---|---|---|---|---|---|---|---|---|---|
| 2SC 1901 | | | | | | | | | | | | | | | | | | | |
| 2SC 1902 | | | | | | | | | | | | | | | | | | | |
| 2SC 1903 | | | | | | | | | | | | | | | | | | | |
| 2SC 1904 | | | | | | | | | | | | | | | | | | | |
| 2SC 1905 | PA | Si.TP | 350 | 7 | 200 | 15W (Tc = 25°C) | 150 | 10 | 300 | 100 | 10 | 50 | 30 | −20 | | 45* | 7.5 | 10 | F-268 |
| 2SC 1906 | | | | | | | | | | | | | | | | | | | |
| 2SC 1907 | | | | | | | | | | | | | | | | | | | |
| 2SC 1908 | | | | | | | | | | | | | | | | | | | |
| 2SC 1909 | PA | Si.E | 75 | 4 | 3A | 1.5W | 150 | 10 | 40 | 60 | 10 | 500 | 10 | −150 | | 160* | 50 | 4 | F-268 |
| 2SC 1910 | Diff | Si.EP | 15 | 2 | 80 | 200/unit | 175 | 0.1 | 5 | 75 3 50 hFE1/hFE2 = 0.8-1.0 | | | 5 | −30 | | 7000* | 1.1 | 15* | F-282 |
| 2SC 1911 | " | " | 20 | 2 | 30 | 150/unit | 175 | 0.1 | 10 | 80 5 10 hFE1/hFE2 = 0.8-1.0 | | | 5 | −10 | | 6500* | 0.66 | 15* | F-282 |
| 2SC 1912 | " | " | 20 | 2 | 30 | 150/unit | 175 | 0.1 | 10 | 80 5 10 hFE1/hFE2 = 0.8-1.0 | | | 5 | −10 | | 6500* | 0.66 | 15* | F-283 |
| 2SC 1913 | RF | " | 150 | 5 | 1A | 15W (Tc = 25°C) | 150 | 10 | 130 | 150 | 10 | 150 | 10 | −50 | | 120* | 20 | 3k | F-268 |
| 2SC 1914 | | | | | | | | | | | | | | | | | | | |
| 2SC 1915 | | | | | | | | | | | | | | | | | | | |
| 2SC 1916 | | | | | | | | | | | | | | | | | | | |
| 2SC 1917 | | | | | | | | | | | | | | | | | | | |
| 2SC 1918 | | | | | | | | | | | | | | | | | | | |
| 2SC 1919 | | | | | | | | | | | | | | | | | | | |
| 2SC 1920 | Diff | Si.EP | 15 | 2 | 80 | 200/unit | 175 | 0.1 | 5 | 75 3 30 hFE1/hFE2 = 0.8-1.0 | | | 5 | −30 | | 7000* | 1.1 | 15* | F-283 |
| 2SC 1921 | | | | | | | | | | | | | | | | | | | |
| 2SC 1922 | | | | | | | | | | | | | | | | | | | |
| 2SC 1923 | RF.Conv / Mix.Osc | Si.EP | 40 | 4 | 20 | 100 | 125 | 0.5 | 18 | 100 | 6 | 1 | 6 | −1 | | 500* | 1.2 | 15 | F-287 |
| 2SC 1924 | Diff.SW | Si.E | 20 | 3 | 50 | 300 | 200 | 0.1 | 10 | 30-300 | 5 | 10 | 5 | −15 | | 3000* | 1.1 | | F-309B |
| 2SC 1925 | | | | | | | | | | | | | | | | | | | |
| 2SC 1926 | | | | | | | | | | | | | | | | | | | |
| 2SC 1927 | Diff.SW | Si.E | 30 | 3 | 50 | 300 | 200 | 0.05 | 15 | 80 | 10 | 10 | 10 | −10 | | 2000* | 1.1 | | F-309A |
| 2SC 1928 | | | | | | | | | | | | | | | | | | | |
| 2SC 1929 | PA | Si.P | 300 | 6 | 400 | 25W (Tc = 25°C) | 150 | 10 | 300 | 150 | 5 | 100 | 10 | −100 | | 80* | 12 | 15 | F-268 |
| 2SC 1930 | RF | Si.EP | 16 | 3 | 30 | 150 | 175 | 0.1 | 10 | 80 | 3 | 10 | 6 | −20 | | 8000* | 0.3 | 30* | F-284 |
| 2SC 1931 | Diff | Si.EP | 16 | 3 | 30 | 150/unit | 175 | 0.1 | 10 | 80 3 10 hFE1/hFE2 = 0.6-1.0 | | | 6 | −20 | | 8000* | 0.45 | 50* | F-263 |
| 2SC 1932 | " | " | 16 | 3 | 30 | 200/unit | 175 | 0.1 | 10 | 80 3 10 hFE1/hFE2 = 0.6-1.0 | | | 6 | −20 | | 8000* | 0.45 | 50* | F-264 |
| 2SC 1933 | " | " | 15 | 3 | 40 | 200/unit | 175 | 0.1 | 10 | 80 3 10 hFE1/hFE2 = 0.6-1.0 | | | 6 | −20 | | 6000* | 0.65 | 50* | F-263 |
| 2SC 1934 | " | " | 20 | 3 | 80 | 500/unit | 175 | 0.1 | 10 | 80 5 30 hFE1/hFE2 = 0.6-1.0 | | | 6 | −30 | | 6000* | 0.9 | 50* | F-285 |
| 2SC 1935 | RF | " | 15 | 3 | 30 | 250 | 175 | 0.1 | 10 | 80 | 6 | 10 | 6 | −20 | | 6000* | 0.4 | 25* | F-284 |
| 2SC 1936 | Diff | " | 15 | 3 | 30 | 200/unit | 175 | 0.1 | 10 | 80 6 10 hFE1/hFE2 = 0.6-1.0 | | | 6 | −20 | | 6000* | 0.6 | 50* | F-263 |
| 2SC 1937 | RF | " | 15 | 3 | 70 | 300 | 175 | 0.1 | 10 | 80 | 6 | 40 | 6 | −40 | | 6000* | 0.7 | 20* | F-284 |
| 2SC 1938 | Diff | " | 15 | 3 | 30 | 200/unit | 175 | 0.1 | 10 | 80 6 10 hFE1/hFE2 = 0.6-1.0 | | | 6 | −20 | | 6000* | 0.6 | 50* | F-265 |
| 2SC 1939 | " | " | 15 | 3 | 30 | 200/unit | 175 | 0.1 | 10 | 80 6 10 hFE1/hFE2 = 0.6-1.0 | | | 6 | −20 | | 6000* | 0.6 | 50* | F-264 |
| 2SC 1940 | PA | Si.E | 120 | 5 | 50 | 800 | 150 | 0.1 | 120 | 200 | 10 | 10 | 10 | −10 | | 120* | 2.3 | | F-278 |
| 2SC 1941 | " | " | 160 | 5 | 50 | 800 | 150 | 0.1 | 160 | 200 | 10 | 10 | 10 | −10 | | 120* | 2.3 | | F-278 |
| 2SC 1942 | | | | | | | | | | | | | | | | | | | |
| 2SC 1943 | | | | | | | | | | | | | | | | | | | |
| 2SC 1944 | | | | | | | | | | | | | | | | | | | |
| 2SC 1945 | PA | Si.EP | 80 | 5 | 6A | 20W (Tc = 25°C) | 150 | 100 | 30 | 50 | 10 | 100 | | | | | | | F-301A |
| 2SC 1946 | " | " | 35 | 4 | 7A | 50W (Tc = 25°C) | 175 | 2mA | 25 | 50 | 10 | 200 | | | | | | | F-272 |
| 2SC 1947 | " | " | 35 | 4 | 1A | 10W (Tc = 25°C) | 175 | 500 | 25 | 50 | 10 | 100 | | | | | | | F-84B |
| 2SC 1948 | | | | | | | | | | | | | | | | | | | |
| 2SC 1949 | | | | | | | | | | | | | | | | | | | |
| 2SC 1950 | RF.PA | Si.E | 28 | 3 | 200 | 5W (Tc = 25°C) | 200 | 0.5 | 10 | 40 | 6 | 100 | 6 | −100 | | 4000* | 1.5 | 25* | F-311 |
| 2SC 1951 | RF | " | 120 | 5 | 100 | 750 | 120 | 0.2 | 100 | 150 | 5 | 3 | 10 | −2 | | | 2.4 | $C_{ob'b}$ 45pS | F-259 |
| 2SC 1952 | | | | | | | | | | | | | | | | | | | |
| 2SC 1953 | AF.PA | | 150 | 5 | 100 | 1W | 150 | 1 | 100 | 65-450 | 5 | 10 | 10 | −10 | | 200* | | | |
| 2SC 1954 | | | | | | | | | | | | | | | | | | | |
| 2SC 1955 | | | | | | | | | | | | | | | | | | | |
| 2SC 1956 | | | | | | | | | | | | | | | | | | | |
| 2SC 1957 | PA | Si.E | 75 | 4 | 1A | 750 | 150 | 1 | 40 | 90 | 10 | 500 | 10 | −150 | | 250* | 14 | 14 | F-225 |
| 2SC 1958 | | | | | | | | | | | | | | | | | | | |
| 2SC 1959 | | | | | | | | | | | | | | | | | | | |
| 2SC 1960 | | | | | | | | | | | | | | | | | | | |

Pin Configurations are 1. Emitter, 2. Base, 3. Collector, 4. Shield, unless otherwise specified. (Outline Dimensions: mm)

| TYPE NO. | USES | MATERIAL STRUCTURE | $V_{CBO}$ (V) | $V_{EBO}$ (V) | $I_C$ (mA) | $P_d$ (mW) | $T_j$ (°C) | $I_{CBO}$ (uA) | VALUE OF DC/PULSE | | | | BIAS | | hfe hfb* | fab fT (Mc) | Cob (pF) | $r_{bb'}$ $h_{ie(real)}$* (Ω) | CASE STYLE |
|---|---|---|---|---|---|---|---|---|---|---|---|---|---|---|---|---|---|---|---|
| | | | | | | | | | $V_{CB}$(V) | hFE | $V_{CE}$(V) | $I_C$(mA) | $V_{CB}$(V) | $I_E$(mA) | | | | | |
| 2SC 1961 | | | | | | | | | | | | | | | | | | | |
| 2SC 1962 | | | | | | | | | | | | | | | | | | | |
| 2SC 1963 | RF | Si.PaMe | 25 | 6 | 200 | 270 | 120 | 0.2 | 25 | 300 | 6 | 2 | 6 | −2 | | 300* | 4.5 | $Ccrbb'$ 300pS | F-277 |
| 2SC 1964 | PA | Si.EP | 80 | 4 | 3.5A | 12.5W (Tc = 25°C) | 150 | 30 | 50 | 10 | 100 | | | | | | | | F-301B |
| 2SC 1965 | " | " | 35 | 4 | 1A | 15W (Tc = 25°C) | 175 | 500 | 25 | 50 | 10 | 100 | | | | | | | F-97B |
| 2SC 1966 | " | " | 35 | 3.5 | 1A | 10W (Tc = 25°C) | 175 | 100 | 15 | 50 | 10 | 100 | | | | | | | F-272 |
| 2SC 1967 | " | " | 35 | 4 | 2A | 20W (Tc = 25°C) | 175 | 200 | 15 | 50 | 10 | 100 | | | | | | | F-272 |
| 2SC 1968 | " | " | 35 | 4 | 5A | 40W (Tc = 25°C) | 175 | 500 | 15 | 50 | 10 | 100 | | | | | | | F-272 |
| 2SC 1969 | " | " | 60 | 5 | 6A | 20W (Tc = 25°C) | 150 | 100 | 30 | 50 | 12 | 10 | | | | | | | F-301B |
| 2SC 1970 | " | " | 40 | 4 | 600 | 5W (Tc = 25°C) | 150 | 100 | 25 | 50 | 10 | 100 | | | | | | | F-301B |
| 2SC 1971 | " | " | 35 | 4 | 2A | 12.5W (Tc = 25°C) | 150 | 500 | 25 | 50 | 10 | 100 | | | | | | | F-301A |
| 2SC 1972 | " | " | 35 | 4 | 3.5A | 25W (Tc = 25°C) | 150 | 1mA | 25 | 50 | 10 | 100 | | | | | | | F-301A |
| 2SC 1973 | | | | | | | | | | | | | | | | | | | |
| 2SC 1974 | PA | Si.EP | 80 | 4 | 2A | 15W (Tc = 25°C) | 150 | 10 | 40 | 60 | 5 | 1A | 5 | −500 | | 150* | 35 | 3k* | F-268 |
| 2SC 1975 | " | " | 120 | 5 | 2A | 15W (Tc = 25°C) | 150 | 10 | 40 | 100 | 5 | 1A | 5 | −500 | | 150* | 40 | 3k* | F-268 |
| 2SC 1976 | | | | | | | | | | | | | | | | | | | |
| 2SC 1977 | | | | | | | | | | | | | | | | | | | |
| 2SC 1978 | | | | | | | | | | | | | | | | | | | |
| 2SC 1979 | | | | | | | | | | | | | | | | | | | |
| 2SC 1980 | LN | | 120 | 5 | 50 | 150 | 125 | 0.1 | 50 | 260-1040 | 5 | 2 | | | | | | | F-138D |
| 2SC 1981 | AF.SW | Si.E | 50 | 30 | 100 | 300 | 120 | 0.02 | 50 | 500-2000 | 3 | | 6 | −1 | | 30* | 4 | | F-49C |
| 2SC 1982 | RF | Si.PaMe | 140 | 6 | 1A | 625 | 150 | 0.1 | 50 | 120 | 2 | 100 | 10 | −10 | | 120* | 6.5 | $Ccrbb'$ 120pS | F-84C |
| 2SC 1983 | PA | Si.TMe | 80 | 6 | 3A | 30W (Tc = 25°C) | 150 | 100 | 80 | 700 | 4 | 1A | 12 | −200 | | 15* | 37 | 150* | F-298 |
| 2SC 1984 | " | " | 100 | 6 | 3A | 30W (Tc = 25°C) | 150 | 100 | 100 | 700 | 4 | 1A | 12 | −200 | | 15* | 37 | 150* | F-298 |
| 2SC 1985 | " | " | 80 | 6 | 6A | 40W (Tc = 25°C) | 150 | 1mA | 80 | 100 | 4 | 1A | 12 | −500 | | 10* | 80 | 12* | F-298 |
| 2SC 1986 | " | " | 100 | 6 | 6A | 40W (Tc = 25°C | 150 | 1mA | 100 | 100 | 4 | 1A | 12 | −500 | | 10* | 80 | 12* | F-298 |
| 2SC 1987 | | | | | | | | | | | | | | | | | | | |
| 2SC 1988 | RF | Si.E | 25 | 3 | 70 | 350 | 200 | 1 | 15 | 70 | 10 | 20 | 10 | −20 | | 4500* | 0.6 | 30* | F-50C |
| 2SC 1989 | " | Si.EP | 30 | 3 | 30 | 150 | 125 | 0.1 | 10 | 100 | 10 | 1 | 10 | −1 | | 300* | 1.2 | 3.5k* | F-138 |
| 2SC 1990 | " | " | 30 | 3 | 15 | 150 | 125 | 1 | 10 | 100 | 6 | 1 | 6 | −1 | | 650* | 1 | 3.5k* | F-138 |
| 2SC 1991 | RF | Si.E | 60 | 5 | 100 | 625 | 150 | 0.05 | 60 | 170 | 10 | 2 | 6 | −10 | | 250* | 1.5 | $Ccrbb'$ 40pS | F-138D |
| 2SC 1992 | RF.AF | " | 50 | 6 | 100 | 300 | 150 | 0.06 | 50 | 235 | 5 | 2 | 5 | −2 | 238 | 300* | 3 | $Ccrbb'$ 250pS | F-138F |
| 2SC 1993 | " | " | 30 | 5 | 100 | 300 | 150 | 0.06 | 30 | 290 | 5 | 2 | 5 | −2 | 330 | 300* | 3 | $Ccrbb'$ 250pS | F-138F |
| 2SC 1994 | RF.AF.LN | " | 45 | 5 | 100 | 300 | 150 | 0.06 | 45 | 380 | 5 | 2 | 5 | −10 | | 300* | 3 | $Ccrbb'$ 250pS | F-138F |
| 2SC 1995 | " | " | 50 | 5 | 100 | 300 | 150 | 0.06 | 50 | 380 | 5 | 2 | 5 | −10 | | 300* | 3 | $Ccrbb'$ 250pS | F-138F |
| 2SC 1996 | RF | " | 50 | 5 | 800 | 625 | 150 | 0.1 | 20 | 200 | 1 | 100 | 5 | −10 | | 100* | 11 | $Ccrbb'$ 100pS | F-138F |
| 2SC 1997 | " | " | 30 | 5 | 800 | 625 | 150 | 0.1 | 20 | 200 | 1 | 100 | 5 | −10 | | 100* | 11 | $Ccrbb'$ 100pS | F-138F |
| 2SC 1998 | RF.AF | " | 80 | 6 | 100 | 500 | 150 | 0.05 | 80 | 140 | 5 | 2 | 5 | −2 | 320 | 300* | 3.7 | $Ccrbb'$ 250pS | F-138F |
| 2SC 1999 | " | " | 50 | 6 | 100 | 500 | 150 | 0.05 | 50 | 140 | 5 | 2 | 5 | −2 | 320 | 300* | 3.7 | $Ccrbb'$ 250pS | F-138F |
| 2SC 2000 | | | | | | | | | | | | | | | | | | | |
| 2SC 2001 | RF.AF | Si.E | 30 | 5 | 700 | 600 | 150 | 0.1 | 25 | 200 | 1 | 100 | 6 | −10 | | 150* | 13 | $Ccrbb'$ 50pS | F-138 |
| 2SC 2002 | " | " | 60 | 5 | 300 | 600 | 150 | 0.1 | 50 | 200 | 1 | 50 | 6 | −10 | | 140* | 8 | $Ccrbb'$ 25pS | F-138 |
| 2SC 2003 | " | " | 80 | 5 | 300 | 600 | 150 | 0.1 | 65 | 200 | 1 | 50 | 6 | −10 | | 140* | 8 | $Ccrbb'$ 25pS | F-138 |
| 2SC 2004 | | | | | | | | | | | | | | | | | | | |
| 2SC 2005 | | | | | | | | | | | | | | | | | | | |
| 2SC 2006 | | | | | | | | | | | | | | | | | | | |
| 2SC 2007 | | | | | | | | | | | | | | | | | | | |
| 2SC 2008 | | | | | | | | | | | | | | | | | | | |
| 2SC 2009 | | | | | | | | | | | | | | | | | | | |
| 2SC 2010 | | | | | | | | | | | | | | | | | | | |
| 2SC 2011 | | | | | | | | | | | | | | | | | | | |
| 2SC 2012 | | | | | | | | | | | | | | | | | | | |
| 2SC 2013 | | | | | | | | | | | | | | | | | | | |
| 2SC 2014 | | | | | | | | | | | | | | | | | | | |
| 2SC 2015 | | | | | | | | | | | | | | | | | | | |
| 2SC 2016 | | | | | | | | | | | | | | | | | | | |
| 2SC 2017 | | | | | | | | | | | | | | | | | | | |
| 2SC 2018 | | | | | | | | | | | | | | | | | | | |
| 2SC 2019 | | | | | | | | | | | | | | | | | | | |
| 2SC 2020 | PA | Si.E | 45 | 4 | 2A | 12W (Tc = 25°C) | 150 | 2 | 40 | 30-150 | 2 | 100 | 2 | −100 | | 270* | 20 | | F-240 |

**Pin Configurations are 1. Emitter, 2. Base, 3. Collector, 4. Shield, unless otherwise specified. (Outline Dimensions: mm)**

| TYPE NO. | USES | MATERIAL STRUCTURE | $V_{CBO}$ (V) | $V_{EBO}$ (V) | $I_C$ (mA) | $P_d$ (mW) | $T_j$ (°C) | $I_{CBO}$ (uA) | VALUE OF DC/PULSE | | | | BIAS | | hfe hfb* | fab fT (Mc) | Cob (pF) | $r_{bb'}$ $h_{ie(real)}$* (Ω) | CASE STYLE |
|---|---|---|---|---|---|---|---|---|---|---|---|---|---|---|---|---|---|---|---|
| | | | | | | | | | $V_{CB}$(V) | hFE | $V_{CE}$(V) | $I_C$(mA) | $V_{CB}$(V) | $I_e$(mA) | | | | | |
| 2SC 2021 | | | | | | | | | | | | | | | | | | | |
| 2SC 2022 | | | | | | | | | | | | | | | | | | | |
| 2SC 2023 | PA | Si | 300 | | 2A | 40W (Tc = 25°C) | | | | 60 | | | | | | | | | |
| 2SC 2024 | | | | | | | | | | | | | | | | | | | |
| 2SC 2025 | | | | | | | | | | | | | | | | | | | |
| 2SC 2026 | | | | | | | | | | | | | | | | | | | |
| 2SC 2027 | | | | | | | | | | | | | | | | | | | |
| 2SC 2028 | | | | | | | | | | | | | | | | | | | |
| 2SC 2029 | | | | | | | | | | | | | | | | | | | |
| 2SC 2030 | | | | | | | | | | | | | | | | | | | |
| 2SC 2031 | | | | | | | | | | | | | | | | | | | |
| 2SC 2032 | | | | | | | | | | | | | | | | | | | |
| 2SC 2033 | | | | | | | | | | | | | | | | | | | |
| 2SC 2034 | PA | Si.EP | 120 | 5 | 2A | 12W (Tc = 25°C) | 150 | 1 | 40 | 120 | 5 | 1A | 5 | —500 | | 150* | 40 | 3k* | F-84B |
| 2SC 2035 | | | | | | | | | | | | | | | | | | | |
| 2SC 2036 | | | | | | | | | | | | | | | | | | | |
| 2SC 2037 | | | | | | | | | | | | | | | | | | | |
| 2SC 2038 | | | | | | | | | | | | | | | | | | | |
| 2SC 2039 | PA | Si.EP | 70 | 4 | 8A | 80W (Tc = 25°C) | 175 | 1mA | 30 | 50 | 28 | 1A | | | | | | | F-302 |
| 2SC 2040 | " | " | 40 | 4 | 500 | 5W (Tc = 25°C) | 175 | 100 | 30 | 50 | 20 | 100 | | | | | | | F-312 |
| 2SC 2041 | | | | | | | | | | | | | | | | | | | |
| 2SC 2042 | | | | | | | | | | | | | | | | | | | |
| 2SC 2043 | | | | | | | | | | | | | | | | | | | |
| 2SC 2044 | | | | | | | | | | | | | | | | | | | |
| 2SC 2045 | | | | | | | | | | | | | | | | | | | |
| 2SC 2046 | | | | | | | | | | | | | | | | | | | |
| 2SC 2047 | | | | | | | | | | | | | | | | | | | |
| 2SC 2048 | | | | | | | | | | | | | | | | | | | |
| 2SC 2049 | | | | | | | | | | | | | | | | | | | |
| 2SC 2050 | | | | | | | | | | | | | | | | | | | |
| 2SC 2051 | | | | | | | | | | | | | | | | | | | |
| 2SC 2052 | | | | | | | | | | | | | | | | | | | |
| 2SC 2053 | RF | Si.EP | 40 | 4 | 300 | 600 | 135 | 20 | 15 | 50 | 10 | 10 | | | | | | | F-138B |
| 2SC 2054 | | | | | | | | | | | | | | | | | | | |
| 2SC 2055 | RF | Si.EP | 18 | 4 | 300 | 500 | 135 | 30 | 10 | 50 | 7 | 50 | | | | | | | F-138B |
| 2SC 2056 | PA | " | 18 | 4 | 600 | 800 | 175 | 100 | 10 | 50 | 7 | 100 | | | | | | | F-84B |
| 2SC 2057 | | | | | | | | | | | | | | | | | | | |
| 2SC 2058 | | | | | | | | | | | | | | | | | | | |
| 2SC 2059 | | | | | | | | | | | | | | | | | | | |
| 2SC 2060 | | | | | | | | | | | | | | | | | | | |
| 2SC 2061 | | | | | | | | | | | | | | | | | | | |
| 2SC 2062 | | | | | | | | | | | | | | | | | | | |
| 2SC 2063 | | | | | | | | | | | | | | | | | | | |
| 2SC 2064 | | | | | | | | | | | | | | | | | | | |
| 2SC 2065 | PA | Si.E | 35 | 3 | 250 | 2W (Tc = 25°C) | 200 | 10 | 20 | 100 | 10 | 18 | 10 | —80 | | 3200* | 2 | | F-129 |
| 2SC 2066 | | | | | | | | | | | | | | | | | | | |
| 2SC 2067 | | | | | | | | | | | | | | | | | | | |
| 2SC 2068 | PA | Si.TMe | 300 | 5 | 50 | 1.5W | 150 | 1 | 240 | 100 | 10 | 20 | 20 | —20 | | 95* | 3 | 10 | F-303 |
| 2SC 2069 | | | | | | | | | | | | | | | | | | | |
| 2SC 2070 | | | | | | | | | | | | | | | | | | | |
| 2SC 2071 | | | | | | | | | | | | | | | | | | | |
| 2SC 2072 | | | | | | | | | | | | | | | | | | | |
| 2SC 2073 | RF.PA | Si.TMe | 150 | 5 | 1.5A | 25W (Tc = 25°C) | 150 | 10 | 120 | 75 | 10 | 500 | 10 | —500 | | 4* | 35 | 25 | F-268 |
| 2SC 2074 | | | | | | | | | | | | | | | | | | | |
| 2SC 2075 | | | | | | | | | | | | | | | | | | | |
| 2SC 2076 | RF | Si.EP | 35 | 4 | 20 | 200 | 125 | 1 | 20 | 150 | 10 | 1 | 10 | —2 | | 150* | 2.5 | 3.5k* | F-138 |
| 2SC 2077 | | | | | | | | | | | | | | | | | | | |
| 2SC 2078 | | | | | | | | | | | | | | | | | | | |
| 2SC 2079 | | | | | | | | | | | | | | | | | | | |
| 2SC 2080 | | | | | | | | | | | | | | | | | | | |
| 2SC 2081 | | | | | | | | | | | | | | | | | | | |

**Pin Configurations are 1. Emitter, 2. Base, 3. Collector, 4. Shield, unless otherwise specified. (Outline Dimensions: mm)**

| TYPE NO. | USES | MATERIAL STRUCTURE | $V_{CBO}$ (V) | $V_{EBO}$ (V) | Ic (mA) | Pd (mW) | Tj (°C) | $I_{CBO}$ (uA) | VALUE OF DC/PULSE | | | | BIAS | | hfe hfb* | fab fT (Mc) | Cob (pF) | $r_{bb'}$ $h_{ie(real)}$* (Ω) | CASE STYLE |
|---|---|---|---|---|---|---|---|---|---|---|---|---|---|---|---|---|---|---|---|
| | | | | | | | | | $V_{CB}$(V) | hFE | $V_{CE}$(V) | $I_C$(mA) | $V_{CB}$(V) | $I_e$(mA) | | | | | |
| 2SC 2082 | | | | | | | | | | | | | | | | | | | |
| 2SC 2083 | | | | | | | | | | | | | | | | | | | |
| 2SC 2084 | | | | | | | | | | | | | | | | | | | |
| 2SC 2085 | PA | Si.TP | 300 | 5 | 100 | 10W ($T_C$ = 25°C) | 150 | 10 | 300 | 80 | 10 | 50 | 30 | −20 | | 55* | 8 | 10 | F-268 |
| 2SC 2086 | " | Si.EP | 75 | 4 | 1A | 800 | 135 | 100 | 30 | 70 | 10 | 100 | | | | | | | F-242 |
| 2SC 2987 | RF.AF | Si.EP | 270 | 5 | 5 | 100 | 175 | 1 | 200 | 50 | 5 | 1 | 6 | −1 | | 80* | 5 | $C_{crbb'}$ 30pS | F-49C |
| 2SC 2088 | | | | | | | | | | | | | | | | | | | |
| 2SC 2089 | | | | | | | | | | | | | | | | | | | |
| 2SC 2090 | | | | | | | | | | | | | | | | | | | |
| 2SC 2091 | | | | | | | | | | | | | | | | | | | |
| 2SC 2092 | | | | | | | | | | | | | | | | | | | |
| 2SC 2093 | | | | | | | | | | | | | | | | | | | |
| 2SC 2094 | | | | | | | | | | | | | | | | | | | |
| 2SC 2095 | | | | | | | | | | | | | | | | | | | |
| 2SC 2096 | | | | | | | | | | | | | | | | | | | |
| 2SC 2097 | | | | | | | | | | | | | | | | | | | |
| 2SC 2098 | | | | | | | | | | | | | | | | | | | |
| 2SC 2099 | | | | | | | | | | | | | | | | | | | |
| 2SC 2100 | | | | | | | | | | | | | | | | | | | |
| 2SC 2101 | | | | | | | | | | | | | | | | | | | |
| 2SC 2102 | | | | | | | | | | | | | | | | | | | |
| 2SC 2103 | | | | | | | | | | | | | | | | | | | |
| 2SC 2104 | | | | | | | | | | | | | | | | | | | |
| 2SC 2105 | | | | | | | | | | | | | | | | | | | |
| 2SC 2106 | | | | | | | | | | | | | | | | | | | |
| 2SC 2107 | RF | Si.E | 60 | 8 | 100 | 150 | 125 | 0.1 | 40 | 160 | 1 | 10 | 10 | −10 | | 270* | 3.2 | 40 | F-176 |
| 2SC 2108 | | | | | | | | | | | | | | | | | | | |
| 2SC 2109 | | | 60 | 8 | 200 | 300 | 150 | 0.1 | 40 | 160 | 1 | 10 | 10 | −10 | | 300* | 3.2 | 40 | F-304 |
| 2SC 2110 | | | | | | | | | | | | | | | | | | | |
| 2SC 2111 | | | | | | | | | | | | | | | | | | | |
| 2SC 2112 | | | | | | | | | | | | | | | | | | | |
| 2SC 2113 | | | | | | | | | | | | | | | | | | | |
| 2SC 2114 | | | | | | | | | | | | | | | | | | | |
| 2SC 2115 | | | | | | | | | | | | | | | | | | | |
| 2SC 2116 | | | | | | | | | | | | | | | | | | | |
| 2SC 2117 | | | | | | | | | | | | | | | | | | | |
| 2SC 2118 | | | | | | | | | | | | | | | | | | | |
| 2SC 2119 | | | | | | | | | | | | | | | | | | | |
| 2SC 2120 | RF.PA | Si.EP | 30 | 5 | 800 | 600 | 150 | 0.1 | 20 | 200 | 1 | 100 | 5 | −10 | | 120* | 13 | 25 | F-138 |
| 2SC 2121 | PA | Si.TMe | 750 | 6 | 3A | 50W ($T_C$ = 25°C) | 150 | 500 | 750 | 40 | 5 | 1A | 10 | −200 | | 8* | 85 | 10 | F-102 |
| 2SC 2122 | " | " | 800 | 8 | 10A | 50W ($T_C$ = 25°C) | 150 | 1mA | 800 | 25 | 10 | 2.5A | 10 | −100 | | 6* | 125 | 10 | F-102 |
| 2SC 2123 | " | " | 1000 | 8 | 12A | 50W ($T_C$ = 25°C) | 150 | 1mA | 1000 | 8 | 5 | 8A | 10 | −500 | | 6* | 125 | 10 | F-102 |
| 2SC 2124 | | | | | | | | | | | | | | | | | | | |
| 2SC 2125 | PA | Si.TMe | 2200 | 5 | 5A | 50W ($T_C$ = 25°C) | 150 | 500 | 2200 | 25 | 10 | 1A | 10 | −100 | | 5* | 165 | 10 | F-102 |
| 2SC 2126 | SW | Si.T | 200 | 6 | 3A | 30W ($T_C$ = 25°C) | 150 | 250 | 200 | 42 | 3 | 3A | | | | | | | F-204 |
| 2SC 2127 | " | " | 200 | 6 | 10A | 100W ($T_C$ = 25°C) | 150 | 250 | 200 | 32 | 3 | 10A | | | | | | | F-102 |
| 2SC 2128 | " | " | 200 | 6 | 30A | 200W ($T_C$ = 25°C) | 150 | 500 | 200 | 22 | 3 | 30A | | | | | | | F-266 |
| 2SC 2129 | | | | | | | | | | | | | | | | | | | |
| 2SC 2130 | | | | | | | | | | | | | | | | | | | |
| 2SC 2131 | PA | Si.EP | 40 | 4 | 600 | 800 | 175 | 100 | 25 | 50 | 10 | 100 | | | | | | | |
| 2SC 2132 | " | " | 35 | 4 | 9A | 50W ($T_C$ = 25°C) | 175 | 1mA | 15 | 50 | 10 | 1A | | | | | | | F-313 |
| 2SC 2133 | " | " | 55 | 4 | 5A | 75W ($T_C$ = 25°C) | 175 | 2mA | 35 | 50 | 25 | 200 | | | | | | | F-313 |
| 2SC 2134 | " | " | 55 | 4 | 10A | 120W ($T_C$ = 25°C) | 175 | 5mA | 35 | 50 | 25 | 200 | | | | | | | F-313 |
| 2SC 2135 | | | | | | | | | | | | | | | | | | | |
| 2SC 2136 | | | | | | | | | | | | | | | | | | | |
| 2SC 2137 | | | | | | | | | | | | | | | | | | | |
| 2SC 2138 | | | | | | | | | | | | | | | | | | | |
| 2SC 2139 | | | | | | | | | | | | | | | | | | | |
| 2SC 2140 | | | | | | | | | | | | | | | | | | | |
| 2SC 2141 | | | | | | | | | | | | | | | | | | | |

**Pin Configurations are 1. Emitter, 2. Base, 3. Collector, 4. Shield, unless otherwise specified. (Outline Dimensions: mm)**

| TYPE NO. | USES | MATERIAL STRUCTURE | $V_{CBO}$ (V) | $V_{EBO}$ (V) | $I_C$ (mA) | $P_d$ (mW) | $T_j$ (°C) | $I_{CBO}$ (uA) | VALUE OF DC/PULSE | | | | BIAS | | hfe hfb* | fab fT (Mc) | Cob (pF) | $r_{bb'}$ $h_{ie(real)}$* (Ω) | CASE STYLE |
|---|---|---|---|---|---|---|---|---|---|---|---|---|---|---|---|---|---|---|---|
| | | | | | | | | | $V_{CB}$(V) | hFE | $V_{CE}$(V) | $I_C$(mA) | $V_{CB}$(V) | $I_E$(mA) | | | | | |
| 2SC 2142 | | | | | | | | | | | | | | | | | | | |
| 2SC 2143 | | | | | | | | | | | | | | | | | | | |
| 2SC 2144 | | | | | | | | | | | | | | | | | | | |
| 2SC 2145 | PA | Si.EP | 35 | 4 | 2A | 10W (Tc = 25°C) | 175 | 500 | 25 | 50 | 10 | 100 | | | | | | | F-84B |
| 2SC 2146 | | | | | | | | | | | | | | | | | | | |
| 2SC 2147 | PA | Si.TMe | 400 | 6 | 50A | 200W (Tc = 25°C) | 150 | 1mA | 400 | 20 | 4 | 30A | 12 | —1A | | 5* | 370 | 12* | F-230 |
| 2SC 2148 | RF | Si.E | 30 | 3 | 50 | 250 | 200 | 0.1 | 15 | 80 | 10 | 10 | 10 | —10 | | 3000* | 0.55 | | F-314 |
| 2SC 2149 | " | " | 25 | 3 | 70 | 290 | 200 | 0.1 | 15 | 70 | 10 | 20 | 10 | —20 | | 5000* | 0.6 | | F-314 |
| 2SC 2150 | " | " | 20 | 3 | 30 | 250 | 200 | 0.1 | 8 | 100 | 8 | 10 | 8 | —10 | | 6000* | 0.35 | | F-314 |
| 2SC 2151 | SW | Si.TMe | 600 | 6 | 15A | 150W (Tc = 25°C) | 175 | 100 | 150 | 20 | 5 | 7.5A | | | | | | | F-102 |
| 2SC 2152 | | | | | | | | | | | | | | | | | | | |
| 2SC 2153 | | | | | | | | | | | | | | | | | | | |
| 2SC 2154 | | | | | | | | | | | | | | | | | | | |
| 2SC 2155 | | | | | | | | | | | | | | | | | | | |
| 2SC 2156 | | | | | | | | | | | | | | | | | | | |
| 2SC 2157 | | | | | | | | | | | | | | | | | | | |
| 2SC 2158 | | | | | | | | | | | | | | | | | | | |
| 2SC 2159 | SW | Si.TMe | 400 | 7 | 50A | 200W (Tc = 25°C) | 150 | 100 | 400 | 15 | 4 | 30A | | | | | | | F-230 |
| 2SC 2160 | | | | | | | | | | | | | | | | | | | |
| 2SC 2161 | | | | | | | | | | | | | | | | | | | |
| 2SC 2162 | | | | | | | | | | | | | | | | | | | |
| 2SC 2163 | | | | | | | | | | | | | | | | | | | |
| 2SC 2164 | | | | | | | | | | | | | | | | | | | |
| 2SC 2165 | | | | | | | | | | | | | | | | | | | |
| 2SC 2166 | | | | | | | | | | | | | | | | | | | |
| 2SC 2167 | | | | | | | | | | | | | | | | | | | |
| 2SC 2168 | | | | | | | | | | | | | | | | | | | |
| 2SC 2169 | | | | | | | | | | | | | | | | | | | |
| 2SC 2170 | | | | | | | | | | | | | | | | | | | |
| 2SC 2171 | | | | | | | | | | | | | | | | | | | |
| 2SC 2172 | | | | | | | | | | | | | | | | | | | |
| 2SC 2173 | | | | | | | | | | | | | | | | | | | |
| 2SC 2174 | | | | | | | | | | | | | | | | | | | |
| 2SC 2175 | | | | | | | | | | | | | | | | | | | |
| 2SC 2176 | | | | | | | | | | | | | | | | | | | |
| 2SC 2177 | | | | | | | | | | | | | | | | | | | |
| 2SC 2178 | | | | | | | | | | | | | | | | | | | |
| 2SC 2179 | | | | | | | | | | | | | | | | | | | |
| 2SC 2180 | | | | | | | | | | | | | | | | | | | |
| 2SC 2181 | | | | | | | | | | | | | | | | | | | |
| 2SC 2182 | | | | | | | | | | | | | | | | | | | |
| 2SC 2183 | | | | | | | | | | | | | | | | | | | |
| 2SC 2184 | | | | | | | | | | | | | | | | | | | |
| 2SC 2185 | | | | | | | | | | | | | | | | | | | |
| 2SC 2186 | | | | | | | | | | | | | | | | | | | |
| 2SC 2187 | | | | | | | | | | | | | | | | | | | |
| 2SC2188 | | | | | | | | | | | | | | | | | | | |
| 2SC 2189 | SW | Si.TP | 150 | 7 | 10A | 80W (Tc = 25°C) | 150 | 100 | 150 | 70 | 5 | 4A | | | | | | | F-102 |
| 2SC 2190 | " | " | 450 | 7 | 5A | 100W (Tc = 25°C) | 150 | 100 | 450 | 25 | 5 | 2A | | | | | | | F-102 |
| 2SC 2191 | " | " | 450 | 7 | 10A | 100W (Tc = 25°C) | 150 | 100 | 450 | 25 | 5 | 4A | | | | | | | F-102 |
| 2SC 2192 | | | | | | | | | | | | | | | | | | | |
| 2SC 2193 | RF | Si.E | 150 | 5 | 300 | 600 | 175 | 1 | 120 | 70 | 5 | 50 | 10 | —30 | | 150* | 4 | 20* | F-84B |
| 2SC 2194 | | | | | | | | | | | | | | | | | | | |
| 2SC 2195 | | | | | | | | | | | | | | | | | | | |
| 2SC 2196 | | | | | | | | | | | | | | | | | | | |
| 2SC 2197 | | | | | | | | | | | | | | | | | | | |
| 2SC 2198 | | | | | | | | | | | | | | | | | | | |
| 2SC 2199 | | | | | | | | | | | | | | | | | | | |
| 2SC 2200 | | | | | | | | | | | | | | | | | | | |
| 2SC 2201 | | | | | | | | | | | | | | | | | | | |

Pin Configurations are 1. Emitter, 2. Base, 3. Collector, 4. Shield, unless otherwise specified. (Outline Dimensions: mm)

| TYPE NO. | USES | MATERIAL STRUCTURE | $V_{CBO}$ (V) | $V_{EBO}$ (V) | Ic (mA) | Pd (mW) | Tj (°C) | $I_{CBO}$ (uA) | VALUE OF DC/PULSE | | | | BIAS | | hfe hfb* | fab fT (Mc) | Cob (pF) | $r_{bb'}$ $h_{ie(real)}$* (Ω) | CASE STYLE |
|---|---|---|---|---|---|---|---|---|---|---|---|---|---|---|---|---|---|---|---|
| | | | | | | | | | $V_{CB}$(V) | hFE | $V_{CE}$(V) | $I_C$(mA) | $V_{CB}$(V) | $I_e$(mA) | | | | | |
| 2SD 11 | SW | GE.A | 25 | 15 | 300 | 150 | 85 | 10 | 25 | 70 | 1 | 20 | 6 | −1 | | 2.5 | | | F-84A |
| 2SD 12 | PA | Si.Me | 75 | 4 | 2.5A | 60W (Tc = 25°C) | 150 | 10mA | 75 | 50 | 4 | 1A | | | | | | | F-103 |
| 2SD 13 | " | " | 35 | 4 | 10a | 100W (Tc = 25°C) | 150 | 40mA | 35 | 40 | 10 | 2.5A | | | | | | | F-109 |
| 2SD 14 | " | " | 75 | 4 | 10A | 100W (Tc = 25°C) | 150 | 45mA | 75 | 30 | 4 | 10A | | | | | | | F-109 |
| 2SD 15 | PA.SW | Si.DJ | 60 | 10 | 6A | 80W (Tc = 25°C) | 150 | 50 | 40 | 50 | 4 | 1.5A | 12 | −500 | | 2 | | | F-102 |
| 2SD 16 | " | " | 100 | 10 | 6A | 80W (Tc = 25°C) | 150 | 50 | 40 | 50 | 4 | 1.5A | 12 | −500 | | 2 | | | F-102 |
| 2SD 17 | " | " | 150 | 10 | 6A | 80W (Tc = 25°C) | 150 | 50 | 40 | 50 | 4 | 1.5A | 12 | −500 | | 2 | | | F-102 |
| 2SD 18 | PA | " | 200 | 10 | 6A | 80W (Tc = 25°C) | 150 | 50 | 40 | 50 | 4 | 1.5A | 12 | −500 | | 2 | | | F-102 |
| 2SD 19 | " | Ge.A | 25 | 10 | 300 | 150 | 85 | 12 | 12 | 31 | 1 | 20 | 6 | −1 | | >1 | | | F-84A |
| 2SD 20 | " | " | 25 | 10 | 300 | 150 | 85 | 12 | 12 | 50 | 1 | 20 | 6 | −1 | | >1 | | | F-84A |
| 2SD 21 | " | " | 25 | 10 | 300 | 150 | 85 | 12 | 12 | 72 | 1 | 20 | 6 | −1 | | >1 | | | F-84A |
| 2SD 22 | " | " | 25 | 10 | 300 | 150 | 85 | 12 | 12 | 97 | 1 | 20 | 6 | −1 | | >1 | | | F-84A |
| 2SD 23 | " | " | 25 | 10 | 300 | 150 | 85 | 12 | 12 | 150 | 1 | 20 | 6 | −1 | | >1 | | | F-84A |
| 2SD 24 | " | Si.Me | 300 | 2 | 100 | 6W (Tc = 70°C) | 110 | 1.5 | 100 | 60 | 10 | 50 | 30 | −20 | | 25* | 17 | | F-99 |
| 2SD 25 | " | Ge.A | 25 | 10 | 100 | 110 | 75 | 14 | 12 | 70 | 1 | 50 | 6 | −1 | | 1 | | | F-12A |
| 2SD 26 | PA.SW | Si.EP | 40 | 5 | 7A | 50W (Tc = 25°C) | 175 | 100 | 30 | 10 | 4 | 5A | | | | | | | F-103 |
| 2SD 26A | " | " | 60 | 5 | 7A | 50W (Tc = 25°C) | 175 | 100 | 30 | 10 | 4 | 5A | | | | | | | F-103 |
| 2SD 26B | " | " | 100 | 5 | 7A | 50W (Tc = 25°C) | 175 | 100 | 30 | 10 | 4 | 5A | | | | | | | F-103 |
| 2SD 26C | " | " | 150 | 5 | 7A | 50W (Tc = 25°C) | 175 | 100 | 30 | 10 | 4 | 5A | | | | | | | F-103 |
| 2SD 27 | PA | Ge.A | 32 | 10 | 500 | 280 | 90 | 10 | 0.5 | 95 | 0.5 | 300 | | | | | | | F-12A |
| 2SD 28 | " | Si.DJ | 70 | | 3A | 18W (Tc = 25°C) | 150 | 20 | 30 | 100 | 1 | 100 | | | | | | | F-100 |
| 2SD 29 | " | " | 70 | | 3A | 18W (Tc = 25°C) | 150 | 20 | 30 | 100 | 1 | 100 | | | | | | | F-100 |
| 2SD 30 | " | Ge.A | 25 | 12 | 200 | 300 | 85 | 15 | 20 | 100 | 1.5 | 100 | 6 | −1 | | 1 | | | F-63 |
| 2SD 31 | " | " | 25 | 10 | 125 | 125 | 75 | 15 | 10 | 50 | 1 | 100 | | | | | | | F-12B |
| 2SD 32 | " | " | 25 | 10 | 125 | 125 | 75 | 15 | 10 | 90 | 1 | 100 | | | | | | | F-12B |
| 2SD 33 | " | " | 20 | 2.5 | 50 | 150 | 85 | 14 | 12 | 70 | 1 | 50 | 6 | −1 | 60 | 2 | | | F-12A |
| 2SD 34 | " | " | 20 | 2.5 | 150 | 250 | 85 | 14 | 12 | 100 | 1 | 150 | 6 | −1 | 60 | 2 | | | F-71A |
| 2SD 35 | " | " | 20 | 10 | 60 | 83 | 75 | 10 | 10 | 72 | 1 | 18 | | | | | | | F-4 |
| 2SD 36 | " | " | 20 | 10 | 60 | 83 | 75 | 10 | 10 | 150 | 1 | 37.5 | | | | | | | F-4 |
| 2SD 37 | " | " | 30 | 12 | 50 | 150 | 85 | 14 | 30 | 7 | 1 | 50 | 6 | −1 | 60 | 2 | | | F-12A |
| 2SD 38 | PA | Ge.A | 30 | 12 | 150 | 250 | 85 | 16 | 30 | 75 | 1 | 150 | 6 | −1 | 60 | 2 | | | F-71A |
| 2SD 39 | | | | | | | | | | | | | | | | | | | |
| 2SD 40 | | | | | | | | | | | | | | | | | | | |
| 2SD 41 | PA | Si.DJ | 80 | 10 | 10A | 200W (Tc = 25°C) | 150 | 200 | 50 | 60 | 5 | 1A | | | | | | | F-102 |
| 2SD 42 | | | | | | | | | | | | | | | | | | | |
| 2SD 43 | PA | Ge.A | 25 | 12 | 50 | 110 | 75 | 14 | 12 | 70 | 1 | 50 | 6 | −1 | | 24 | 1 | | F-12A |
| 2SD 43A | " | " | 45 | 12 | 150 | 110 | 75 | 14 | 12 | 70 | 1 | 50 | 6 | −1 | | 24 | 1 | | F-12A |
| 2SD 44 | AF | " | 25 | 12 | 50 | 80 | 75 | 14 | 12 | | | | 6 | −1 | 85 | >0.5 | 25 | | F-12A |
| 2SD 45 | PA | Si.Me | 150 | 6 | 5A | 50W (Tc = 25°C) | 150 | 5mA | 50 | 40 | 10 | 1A | | | | | | | F-102 |
| 2SD 46 | " | " | 150 | 6 | 5A | 50W (Tc = 25°C) | 150 | 5mA | 50 | 40 | 10 | 1A | | | | | | | F-102 |
| 2SD 47 | " | " | 100 | 6 | 5A | 50W (Tc = 25°C) | 150 | 5mA | 15 | 40 | 10 | 1A | | | | | | | F-102 |
| 2SD 48 | " | Si.DJ | 100 | 10 | 3A | 20W (Tc = 25°C) | 175 | 15 | 30 | 50 | 4 | 750 | | | | 1.5 | | | F-83 |
| 2SD 49 | " | " | 100 | 10 | 3A | 18W (Tc = 25°C) | 150 | 20 | 30 | 50 | 3 | 1A | 10 | −0.5A | | 2 | | | F-100 |
| 2SD 50 | " | " | 100 | 10 | 6A | 50W (Tc = 25°C) | 175 | 15 | 30 | 30 | 4 | 1.5A | | | | 1.5 | | | F-102 |
| 2SD 51 | " | Si.Me | 100 | 6 | 5A | 50W (Tc = 25°C) | 150 | 5mA | 15 | 60 | 3 | 2A | 10 | −0.5A | | 10 | | | F-102 |
| 2SD 52 | PA.SW | Si.DJ | 100 | 10 | 6A | 80W (Tc = 25°C) | 175 | 10 | 40 | 20 | 4 | 3A | 12 | −0.5A | | 2 | | | F-102 |
| 2SD 53 | " | " | 90 | 12 | 10A | 100W (Tc = 25°C) | 175 | 20 | 30 | 25 | 4 | 5A | 6 | −0.5A | | 1.2 | | | F-102 |
| 2SD 54 | " | " | 100 | 12 | 10A | 150W (Tc = 25°C) | 175 | 20 | 30 | 25 | 4 | 5A | 6 | −0.5A | | 1.2 | | | F-109 |
| 2SD 55 | PA | " | 100 | 10 | 20A | 200W (Tc = 25°C) | 150 | 10mA | 50 | 24 | 5 | 10A | | | | 1 | | | F-102 |
| 2SD 56 | " | " | 220 | 18 | 3A | 30W (Tc = 25°C) | 150 | 50 | 50 | 50 | 1 | 100 | | | | | | | F-100 |
| 2SD 57 | PA.SW | " | 30 | 10 | 3A | 20W (Tc = 25°C) | 150 | 200 | 20 | 70 | 4 | 1A | | | | | | | F-100 |
| 2SD 58 | " | " | 60 | 10 | 3A | 20W (Tc = 25°C) | 150 | 40 | 40 | 70 | 4 | 1A | | | | | | | F-100 |
| 2SD 59 | " | " | 100 | 5 | 6A | 50W (Tc = 25°C) | 150 | 30 | 50 | 60 | 4 | 1A | | | | | | | F-102 |
| 2SD 60 | " | " | 150 | 5 | 6A | 50W (Tc = 25°C) | 150 | 30 | 50 | 60 | 4 | 1A | | | | | | | F-102 |
| 2SD 61 | AF.PA.LN | Ge.A | 30 | 10 | 100 | 120 | 75 | 10 | 25 | 50 | 1 | 10 | 6 | −1 | -0.977* | 1 | 35 | | F-58 |
| 2SD 62 | SW | " | 30 | 10 | 100 | 120 | 75 | 10 | 25 | 50 | 1 | 10 | 6 | −1 | -0.977* | 1 | 35 | | F-58 |
| 2SD 63 | PA | " | 25 | | 100 | 120 | 75 | 10 | 25 | 50 | 1 | 10 | 6 | −1 | | 1 | 35 | | F-58 |
| 2SD 64 | AF | " | 25 | | 100 | 120 | 75 | 15 | 25 | 100 | 1 | 10 | 6 | −1 | -0.977* | 1 | 35 | | F-58 |
| 2SD 65 | " | " | 25 | | 100 | 120 | 75 | 15 | 25 | 50 | 1 | 10 | 6 | −1 | -0.977* | 1 | 35 | | F-58 |
| 2SD 66 | " | " | 25 | | 100 | 120 | 75 | 15 | 25 | 25 | 1 | 10 | 6 | −1 | -0.958* | 0.8 | 35 | | F-58 |

**Pin Configurations are 1. Emitter, 2. Base, 3. Collector, 4. Shield, unless otherwise specified. (Outline Dimensions: mm)**

| TYPE NO. | USES | MATERIAL STRUCTURE | $V_{CBO}$ (V) | $V_{EBO}$ (V) | $I_C$ (mA) | $P_d$ (mW) | $T_j$ (°C) | $I_{CBO}$ (uA) | VALUE OF DC/PULSE | | | | BIAS | | hfe hfb* | fab fT (Mc) | Cob (pF) | $r_{bb'}$ $h_{ie(real)}$* (Ω) | CASE STYLE |
|---|---|---|---|---|---|---|---|---|---|---|---|---|---|---|---|---|---|---|---|
| | | | | | | | | | $V_{CB}$(V) | hFE | $V_{CE}$(V) | $I_C$(mA) | $V_{CB}$(V) | $I_e$(mA) | | | | | |
| 2SD 67 | PA | Si.TMe | 120 | 5 | 5A | 50W (Tc< 55°C) | 150 | 5mA | 80 | 80 | 5 | 1A | | | | 100* | | | F-102 |
| 2SD 68 | " | " | 75 | 5 | 5A | 50W (Tc = 25°C) | 150 | 5mA | 60 | 80 | 5 | 1A | | | | 100* | | | F-102 |
| 2SD 69 | " | " | 140 | | 3A | 50W (Tc = 25°C) | 150 | 100 | 50 | 150 | 3 | 100 | | | | | | | F-102 |
| 2SD 70 | PA | Si.EP | 40 | 5 | 2A | 15W (Tc = 25°C) | 175 | 100 | 24 | 80 | 2 | 1A | | | | | | | F-101 |
| 2SD 71 | " | " | 100 | 5 | 2A | 15W (Tc = 25°C) | 175 | 100 | 40 | 80 | 2 | 0.5A | | | | | | | F-101 |
| 2SD 72 | " | Ge.A | 25 | | 600 | 720 (Tc = 25°C) | 85 | 50 | 20 | 150 | 1.5 | 200 | | | | | | | F-12A |
| 2SD 73 | " | Si.EMe | 100 | 5 | 5A | 60W (Tc = 25°C) | 175 | 5mA | 100 | 50 | 10 | 1A | | | | | | | F-102 |
| 2SD 74 | " | " | 150 | 5 | 5A | 60W (Tc = 25°C) | 175 | 5mA | 150 | 50 | 10 | 1A | | | | | | | F-102 |
| 2SD 75 | AF | Ge.A | 25 | 12 | 100 | 150 | 85 | 14 | 25 | | | | 6 | —1 | 40 | 4 | | | F-12A |
| 2SD 75A | PA | " | 45 | 12 | 100 | 150 | 85 | 25 | 45 | | | | 6 | —1 | 40 | 4 | | | F-12A |
| 2SD 76 | | | | | | | | | | | | | | | | | | | |
| 2SD 77 | PA | Ge.A | 25 | 12 | 100 | 150 | 85 | 14 | 25 | 55 | 1.5 | 50 | 6 | —1 | 55 | 3.5 | | | F-12A |
| 2SD 77A | " | " | 45 | 12 | 100 | 150 | 85 | 25 | 45 | 55 | 1.5 | 50 | 6 | —1 | 55 | 3.5 | | | F-12A |
| 2SD 78 | PA.SW | Si.EPa | 100 | 12 | 2A | 1W | 175 | 1 | 60 | 80 | 2 | 500 | | | | | | | F-84B |
| 2SD 79 | " | Si.EP | 100 | 12 | 2A | 15W (Tc = 25°C) | 175 | 1 | 60 | 80 | 2 | 500 | | | | | | | F-97C |
| 2SD 80 | PA.SW | Si.DJ | 30 | 10 | 6A | 50W (Tc = 25°C) | 150 | 200 | 20 | 60 | 4 | 1A | 10 | —200 | | 3 | | | F-102 |
| 2SD 81 | " | " | 60 | 10 | 6A | 50W (Tc = 25°C) | 150 | 50 | 40 | 60 | 4 | 1A | 10 | —200 | | 3 | | | F-102 |
| 2SD 82 | " | " | 100 | 10 | 6A | 50W (Tc = 25°C) | 150 | 30 | 50 | 60 | 4 | 1A | 10 | —200 | | 3 | | | F-102 |
| 2SD 83 | " | " | 150 | 10 | 6A | 50W (Tc = 25°C) | 150 | 30 | 50 | 60 | 4 | 1A | 10 | —200 | | 3 | | | F-102 |
| 2SD 84 | " | " | 200 | 10 | 6A | 50W (Tc = 25°C) | 150 | 30 | 50 | 60 | 4 | 1A | 10 | —200 | | 3 | | | F-102 |
| 2SD 85 | | | | | | | | | | | | | | | | | | | |
| 2SD 86 | | | | | | | | | | | | | | | | | | | |
| 2SD 87 | | | | | | | | | | | | | | | | | | | |
| 2SD 88 | PA | Si.TMe | 100 | 8 | 5A | 80W (Tc = 25°C) | 150 | 100 | 50 | 80 | 3 | 2A | | | | | | | F-102 |
| 2SD 89 | | | | | | | | | | | | | | | | | | | |
| 2SD 90 | PA.SW | Si.DJ | 30 | 10 | 3A | 20W (Tc = 25°C) | 150 | 200 | 20 | 40 | 4 | 1A | 10 | —200 | | 3.5 | | | F-100 |
| 2SD 91 | " | " | 60 | 10 | 3A | 20W (Tc = 25°C) | 150 | 50 | 40 | 40 | 4 | 1A | 10 | —200 | | 3.5 | | | F-100 |
| 2SD 92 | " | " | 100 | 10 | 3A | 20W (Tc = 25°C) | 150 | 30 | 50 | 40 | 4 | 1A | 10 | —200 | | 3.5 | | | F-100 |
| 2SD 93 | " | " | 150 | 10 | 3A | 20W (Tc = 25°C) | 150 | 30 | 50 | 40 | 4 | 1A | 10 | —200 | | 3.5 | | | F-100 |
| 2SD 94 | " | " | 200 | 10 | 3A | 20W (Tc = 25°C) | 150 | 30 | 50 | 40 | 4 | 1A | 10 | —200 | | 3.5 | | | F-100 |
| 2SD 95 | | | | | | | | | | | | | | | | | | | |
| 2SD 96 | PA | Ge.A | 25 | 2.5 | 250 | 300 (Tc = 25°C) | 85 | 14 | 25 | 90 | 1.5 | 50 | 6 | —1 | | 4 | | | F-12A |
| 2SD 97 | | | | | | | | | | | | | | | | | | | |
| 2SD 98 | | | | | | | | | | | | | | | | | | | |
| 2SD 99 | | | | | | | | | | | | | | | | | | | |
| 2SD 100 | Pa | Ge.A | 32 | 12 | 400 | 250 | 85 | 40 | 12 | 75 | 1 | 150 | | | | | | | F-77 |
| 2SD 100A | " | " | 45 | 12 | 400 | 250 | 85 | 40 | 12 | 75 | 1 | 150 | | | | | | | F-77 |
| 2SD 101 | " | " | 80 | 6 | 600 | 250 | 75 | 50 | 12 | 70 | 1 | 150 | | | | | | | F-77 |
| 2SD 102 | " | Si.DJ | 110 | 10 | 3A | 25W (Tc = 25°C) | 150 | 100 | 50 | 30-300 | 5 | 500 | 10 | —500 | | 1* | 150 | | F-99 |
| 2SD 103 | PA.SW | " | 80 | 10 | 3A | 25W (Tc = 25°C) | 150 | 100 | 50 | 30-300 | 5 | 500 | 10 | —500 | | 1* | 150 | | F-99 |
| 2SD 104 | PA | Ge.A | 20 | 6 | 400 | 150 | 75 | 14 | 12 | 90 | 0.5 | 100 | | | | | | | F-12A |
| 2SD 105 | " | " | 20 | 6 | 400 | 150 | 75 | 14 | 12 | 60 | 0.5 | 100 | | | | | | | Fp12A |
| 2SD 106 | | | | | | | | | | | | | | | | | | | |
| 2SD 107 | PA | Si.TP | 80 | 10 | 5A | 50W (Tc = 25°C) | 150 | 20 | 50 | 4000 | 5 | 1A | 10 | —500 | | 30* | | | F-102 |
| 2SD 108 | " | " | 80 | 10 | 5A | 50W (Tc = 25°C) | 150 | 2 | 50 | 4000 | 5 | 1A | | | | | | | F-102 |
| 2SD 109 | | | | | | | | | | | | | | | | | | | |
| 2SD 110 | PA | Si.DJ | 130 | 10 | 10A | 100W (Tc = 25°C) | 150 | 0.5mA | 50 | 30-300 | 5 | 1A | 10 | —1A | | 2* | 200 | | F-102 |
| 2SD 111 | " | " | 100 | 10 | 10A | 100W (Tc = 25°C) | 150 | 0.5mA | 50 | 30-300 | 5 | 1A | 10 | —1A | | 2* | 200 | | F-102 |
| 2SD 112 | | | | | | | | | | | | | | | | | | | |
| 2SD 113 | PA | Si.DJ | 100 | 10 | 30A | 200W (Tc = 25°C) | 150 | 2mA | 50 | 30-300 | 5 | 1A | | | | 1.5* | 400 | | F-102 |
| 2SD 114 | " | " | 70 | 10 | 30A | 200W (Tc = 25°C) | 150 | 2mA | 50 | 30-300 | 5 | 1A | | | | 1.5* | 400 | | F-102 |
| 2SD 115 | | | | | | | | | | | | | | | | | | | |
| 2SD 116 | PA | Si.TMe | 100 | 6 | 7A | 75W (Tc = 25°C) | 175 | 15 | 30 | 100 | 4 | 1A | | | | | | | F-102 |
| 2SD 117 | " | " | 150 | 6 | 7A | 75W (Tc = 25°C) | 175 | 15 | 30 | 100 | 4 | 1A | | | | | | | F-102 |
| 2SD 118 | " | Si.DJ | 130 | 10 | 7A | 100W (Tc = 25°C) | 150 | 50 | 50 | 30-200 | 5 | 1A | 10 | —500 | | 2* | 200 | | F-102 |
| 2SD 119 | " | " | 100 | 10 | 7A | 100W (Tc = 25°C) | 150 | 50 | 50 | 30-200 | 5 | 1A | 10 | —500 | | 2* | 200 | | F-102 |
| 2SD 120 | " | " | 60 | 12 | 1.5A | 4W (Tc = 25°C) | 175 | 10 | 30 | 40 | 4 | 200 | 12 | —50 | | 0.8 | | | F-84A |
| 2SD 121 | " | " | 100 | 12 | 1.5A | 4W (Tc = 25°C) | 175 | 10 | 30 | 40 | 4 | 200 | 12 | —50 | | 0.8 | | | F-84A |
| 2SD 122 | " | " | 60 | 12 | 3A | 15W (Tc = 25°C) | 175 | 15 | 30 | 40 | 4 | 750 | 12 | —50 | | 0.6 | | | F-83 |
| 2SD 123 | " | " | 100 | 12 | 3A | 15W (Tc = 25°C) | 175 | 15 | 30 | 40 | 4 | 750 | 12 | —50 | | 0.6 | | | F-83 |

Pin Configurations are 1. Emitter, 2. Base, 3. Collector, 4. Shield, unless otherwise specified. (Outline Dimensions: mm)

| TYPE NO. | USES | MATERIAL STRUCTURE | $V_{CBO}$ (V) | $V_{EBO}$ (V) | $I_C$ (mA) | Pd (mW) | Tj (°C) | $I_{CBO}$ (uA) | VALUE OF DC/PULSE | | | | BIAS | | hfe hfb* | fab fT (Mc) | Cob (pF) | $r_{bb'}$ $h_{ie(real)}$* (Ω) | CASE STYLE |
|---|---|---|---|---|---|---|---|---|---|---|---|---|---|---|---|---|---|---|---|
| | | | | | | | | | $V_{CB}$(V) | hFE | $V_{CE}$(V) | $I_C$(mA) | $V_{CB}$(V) | $I_E$(mA) | | | | | |
| 2SD 124 | PA | Si.DJ | 60 | 10 | 6A | 60W (Tc = 25°C) | 175 | 25 | 30 | 30 | 4 | 1.5A | 12 | —50 | | >0.5 | | | F-102 |
| 2SD 124A | " | Si.DB | 75 | 10 | 7A | 60W (Tc = 25°C) | 175 | 25 | 30 | 30 | 4 | 1.5A | 4 | —1A | | 1 | | | F-102 |
| 2SD 125 | " | " | 100 | 10 | 6A | 60W (Tc = 25°C) | 175 | 25 | 30 | 30 | 4 | 1.5A | 12 | —50 | | >0.5 | | | F-102 |
| 2SD 125A | " | " | 100 | 10 | 7A | 60W (Tc = 25°C) | 175 | 25 | 30 | 30 | 4 | 1.5A | 4 | —1A | | 1 | | | F-102 |
| 2SD 126 | PA.SW | Si.DJ | 150 | 5 | 7A | 60W (Tc = 25°C) | 175 | 25 | 30 | 10 | 4 | 6A | 4 | —1A | | | | | F-102 |
| 2SD 127 | PA | Ge.A | 23 | | 500 | 250 | 85 | 15 | 15 | 82 | 1 | 20 | 6 | —1 | | 4 | | | F-12A |
| 2SD 127A | " | " | 23 | | 500 | 250 | 85 | 15 | 15 | 82 | 1 | 20 | 6 | —1 | | 4 | | | F-12A |
| 2SD 128 | " | " | 32 | | 500 | 250 | 85 | 15 | 15 | 82 | 1 | 20 | 6 | —1 | | 4 | | | F-12A |
| 2SD 128A | " | " | 32 | | 500 | 250 | 85 | 15 | 15 | 82 | 1 | 20 | 6 | —1 | | 4 | | | F-12A |
| 2SD 129 | " | Si.DJ | 90 | 10 | 3A | 25W (Tc = 25°C) | 150 | 1mA | 50 | 30-200 | 5 | 500 | 10 | —500 | | 1* | 250 | | F-99 |
| 2SD 130 | " | " | 60 | 10 | 3A | 25W (Tc = 25°C) | 150 | 1mA | 50 | 30-200 | 5 | 500 | 10 | —500 | | 1* | 250 | | F-99 |
| 2SD 131 | " | Si.T | 100 | 5 | 5A | 50W (Tc = 25°C) | 150 | 100 | 50 | 60 | 5 | 1A | | | | | | | F-102 |
| 2SD 132 | " | Si.EMe | 100 | 6 | 20A | 150W (Tc = 25°C) | 175 | 5mA | 65 | 40 | 5 | 20A | | | | | | | F-106 |
| 2SD 133 | | | | | | | | | | | | | | | | | | | |
| 2SD 134 | SW | Ge.A | 60 | 3 | 5 | 30 | 65 | 8 | 15 | 40 | 5 | 3 | | | | | 2 | | F-18 |
| 2SD 135 | | | | | | | | | | | | | | | | | | | |
| 2SD 136 | PA | Si.T | 200 | 3 | 100 | 4W (Tc = 25°C) | 150 | 10 | 150 | 80 | 10 | 50 | | | | | | | F-98A |
| 2SD 137 | " | " | 300 | 3 | 100 | 4W (Tc = 25°C) | 150 | 10 | 150 | 80 | 10 | 50 | | | | | | | F-98A |
| 2SD 138 | PA.SW | " | 200 | 3 | 1A | 30W (Tc = 25°C) | 175 | 20 | 150 | 75 | 10 | 0.5A | | | | | | | F-101 |
| 2SD 139 | " | " | 300 | 3 | 1A | 30W (Tc = 25°C) | 175 | 20 | 150 | 75 | 10 | 0.5A | | | | | | | F-101 |
| 2SD 140 | " | | | | | | | | | | | | | | | | | | |
| 2SD 141 | PA | Si.EP | 20 | 5 | 3A | 15W (Tc = 25°C) | 175 | 100 | 12 | 80 | 2 | 1A | | | | | | | F-101 |
| 2SD 142 | " | " | 40 | 5 | 3A | 15W (Tc = 25°C) | 175 | 100 | 20 | 80 | 2 | 1A | | | | | | | F-101 |
| 2SD 143 | " | " | 80 | 5 | 2A | 15W (Tc = 25°C) | 175 | 100 | 40 | 80 | 2 | 0.5A | | | | | | | F-101 |
| 2SD 144 | " | " | 100 | 5 | 2A | 15W (Tc = 25°C) | 175 | 100 | 50 | 80 | 2 | 0.5A | | | | | | | F-101 |
| 2SD 145 | | | | | | | | | | | | | | | | | | | |
| 2SD 146 | PA.SW | Si.DJ | 40 | 5 | 1A | 20W (Tc = 25°C) | 175 | 20 | 30 | 60 | 4 | 500 | 6 | —0.5A | | 1.4 | | | F-101 |
| 2SD 147 | " | " | 60 | 5 | 1A | 20W (Tc = 25°C) | 175 | 20 | 30 | 50 | 4 | 500 | 6 | —0.5A | | 1.4 | | | F-101 |
| 2SD 148 | SW | " | 70 | 5 | 2A | 20W (Tc = 25°C) | 175 | 20 | 30 | 35 | 4 | 2A | 4 | —100 | | 1.2* | | | F-101 |
| 2SD 149 | PA.SW | " | 70 | 5 | 1A | 800 | 175 | 20 | 30 | 40 | 4 | 1A | 4 | —100 | | 1.2* | | | F-84B |
| 2SD 150 | PA | Si.DB | 50 | 5 | 1A | 15W (Tc = 25°C) | 150 | 100 | 40 | 80 | 2 | 1A | | | | | | | F-150 |
| 2SD 151 | SW | Si.EMe | 100 | 6 | 10A | 120W (Tc = 25°C) | 175 | 1mA | 20 | 35 | 10 | 10A | | | | | | | F-102 |
| 2SD 152 | PA | Si.EP | 150 | 6 | 1A | 15W (Tc = 25°C) | 175 | 100 | 70 | 70 | 2 | 0.5A | | | | | | | F-150 |
| 2SD 153 | PA.SW | Si.TMe | 250 | 6 | 10A | 120W (Tc = 25°C) | 175 | 1mA | 200 | 70 | 5 | 1A | | | | | | | F-200 |
| 2SD 154 | | | | | | | | | | | | | | | | | | | |
| 2SD 155 | PA | Si.EMe | 80 | 5 | 3A | 25W (Tc = 25°C) | 150 | 1mA | 60 | 65 | 2 | 2A | | | | | | | F-134 |
| 2SD 156 | " | Si.T | 200 | 3 | 100 | 4W (Tc = 25°C) | 150 | 10 | 150 | 80 | 10 | 50 | 30 | —10 | | 20* | 8 | 25* | F-99 |
| 2SD 157 | " | " | 300 | 3 | 100 | 4W (Tc = 70°C) | 150 | 10 | 150 | 80 | 10 | 50 | 30 | —10 | | 20* | 8 | 25* | F-99 |
| 2SD 158 | PA.SW | " | 200 | 3 | 1A | 30W (Tc = 25°C) | 175 | 20 | 150 | 75 | 10 | 0.5A | 10 | —100 | | 15* | | | F-99 |
| 2SD 159 | " | " | 300 | 3 | 1A | 30W (Tc = 25°C) | 175 | 20 | 150 | 75 | 10 | 0.5A | 10 | —10 | | 15* | | | F-99 |
| 2SD 160 | " | Si.DJ | 100 | 8 | 1.5A | 25W (Tc = 25°C) | 175 | 10 | 30 | 50 | 10 | 750 | | | | | | | F-83 |
| 2SD 161 | PA | " | 120 | 12 | 10A | 100W (Tc = 25°C) | 175 | 20 | 30 | 30 | 4 | 5A | 6 | —500 | | | | | F-102 |
| 2SD 162 | AF.PA | Ge.A | 20 | 2.5 | 30 | 65 | 175 | 12 | 12 | 80 | 1.5 | 30 | 6 | —1 | 60 | | | | F-4 |
| 2SD 163 | PA.SW | Si.DJ | 60 | 10 | 10A | 100W | 150 | 50 | 40 | 30 | 4 | 5A | 12 | —500 | | 2 | | | F-102 |
| 2SD 164 | " | " | 100 | 10 | 10A | 100W (Tc = 25°C) | 150 | 50 | 40 | 30 | 4 | 5A | 12 | —500 | | 2 | | | F-102 |
| 2SD 165 | " | " | 150 | 10 | 10A | 100W (Tc = 25°C) | 150 | 50 | 40 | 30 | 4 | 5A | 12 | —500 | | 2 | | | F-102 |
| 2SD 166 | " | " | 200 | 10 | 10A | 100W (Tc = 25°C) | 150 | 50 | 40 | 30 | 4 | 5A | 12 | —500 | | 2 | | | F-102 |
| 2SD 167 | AF.PA | Ge.A | 20 | 2.5 | 500 | 200 | 85 | 20 | 12 | 120 | 1 | 150 | | | | | | | F-12A |
| 2SD 168 | SW | Si.DJ | 80 | 6 | 10A | 50W (Tc = 25°C) | 175 | 30 | 30 | 2500 | 4 | 5A | | | | | | | F-102 |
| 2SD 169 | | | | | | | | | | | | | | | | | | | |
| 2SD 170 | PA | Ge.A | 25 | 6 | 500 | 200 | 85 | 20 | 12 | 150 | 1 | 150 | | | | | | | F-12A |
| 2SD 171 | PA | Si.TMe | 450 | | 3.5A | 125W (Tc = 25°C) | 150 | 100 | 50 | 70 | 3 | 1A | | | | | | | F-102 |
| 2SD 172 | PA.SW | Si.DJ | 60 | 6 | 10A | 100W (Tc = 25°C) | 175 | 20 | 30 | 25 | 4 | 5A | 6 | —500 | | 1.2 | | | F-102 |
| 2SD 173 | " | " | 100 | 6 | 10A | 100W (Tc = 25°C) | 175 | 20 | 30 | 25 | 4 | 5A | 6 | —500 | | 1.2 | | | F-102 |
| 2SD 174 | PA | " | 60 | 6 | 5A | 50W (Tc = 25°C) | 175 | 20 | 30 | 25 | 4 | 5A | 6 | —500 | | 1.2 | | | F-102 |
| 2SD 175 | PA.SW | " | 100 | 6 | 5A | 50W (Tc = 25°C) | 175 | 20 | 30 | 25 | 4 | 5A | 6 | —500 | | 1.2 | | | F-102 |
| 2SD 176 | " | " | 90 | 12 | 10A | 100W (Tc = 25°C) | 175 | 20 | 30 | 25 | 4 | 5A | 6 | —500 | | 1.2 | | | F-102 |
| 2SD 177 | " | " | 120 | 12 | 10A | 100W (Tc = 25°C) | 175 | 20 | 30 | 25 | 4 | 5A | 6 | —500 | | 1.2 | | | F-102 |
| 2SD 178 | PA | Ge.A | 20 | 6 | 300 | 225 | 75 | 27 | 12 | 90 | 0.5 | 300 | | | | | | | F-17 |
| 2SD 178A | " | " | 40 | 6 | 300 | 225 | 75 | 27 | 12 | 90 | 0.5 | 300 | | | | | | | F-17 |

Pin Configurations are 1. Emitter, 2. Base, 3. Collector, 4. Shield, unless otherwise specified. (Outline Dimensions: mm)

| TYPE NO. | USES | MATERIAL STRUCTURE | $V_{CBO}$ (V) | $V_{EBO}$ (V) | $I_C$ (mA) | $P_d$ (mW) | $T_j$ (°C) | $I_{CBO}$ (uA) | VALUE OF DC/PULSE | | | | BIAS | | hfe hfb* | fab fT (Mc) | Cob (pF) | $r_{bb'}$ $h_{ie(real)}$* (Ω) | CASE STYLE |
|---|---|---|---|---|---|---|---|---|---|---|---|---|---|---|---|---|---|---|---|
| | | | | | | | | | $V_{CB}$(V) | hFE | $V_{CE}$(V) | $I_C$(mA) | $V_{CB}$(V) | $I_e$(mA) | | | | | |
| 2SD 179 | PA.SW | Si.TMe | 300 | 6 | 40A | 580W (Tc = 25°C) | 175 | 1mA | 300 | 30 | 5 | 20A | | | | | | | F-201 |
| 2SD 180 | PA.SW | Si.TMe | 150 | 7 | 15A | 100W (Tc = 25°C) | 175 | 1mA | 100 | 60 | 5 | 5A | | | | | | | F-102 |
| 2SD 181 | PA.SW | Si.Tme | 150 | 7 | 15A | 100W (Tc = 25°C) | 175 | 1mA | 100 | 60 | 5 | 5A | | | | | | | F-102 |
| 2SD 182 | PA | Si.DJ | 40 | 12 | 1A | 10W (Tc = 25°C) | 175 | 15 | 30 | 35 | 4 | 750 | 6 | —500 | | 1.5 | | | F-83 |
| 2SD 183 | " | " | 100 | 12 | 1A | 10W (Tc = 25°C) | 175 | 15 | 30 | 35 | 4 | 750 | 6 | —500 | | 1.5 | | | F-83 |
| 2SD 184 | SW | " | 60 | 12 | 1.5A | 25W (Tc = 25°C) | 175 | 10 | 30 | 35 | 4 | 750 | 6 | —500 | | 1.5 | | | F-83 |
| 2SD 185 | " | " | 100 | 12 | 1.5A | 25W (Tc = 25°C) | 175 | 10 | 30 | 35 | 4 | 750 | 6 | —500 | | 1.5 | | | F-83 |
| 2SD 186 | PA | Ge.A | 25 | 12 | 150 | 200 | 85 | 15 | 20 | | | | 6 | —1 | 120 | 1 | 60 | | F-12A |
| 2SD 187 | " | " | 25 | 12 | 150 | 200 | 85 | 15 | 20 | 100 | 1.5 | 30 | 6 | —1 | | 1 | | | F-12A |
| 2SD 188 | PA | Si.EMe | 100 | 5 | 5A | 60W (Tc = 25°C) | 150 | 2mA | 70 | 70 | 2 | 3A | | | | | | | F-102 |
| 2SD 189 | PA | Si.TMe | 80 | 5 | 5A | 50W (Tc = 25°C) | 150 | 5mA | 80 | 50 | 4 | 4A | 10 | —500 | | 12* | | | F-102 |
| 2SD 189A | " | " | 100 | 5 | 5A | 50W (Tc = 25°C) | 150 | 5mA | 100 | 50 | 4 | 4A | 10 | —500 | | 12* | | | F-102 |
| 2SD 190 | " | Si.T | 300 | 3 | 100 | 4W (Tc = 25°C) | 150 | 100 | 300 | 60 | 10 | 50 | | | | | | | F-98 |
| 2SD 191 | " | Ge.A | 30 | 12 | 150 | 150 | 75 | 14 | 12 | 80 | 1 | 50 | | | | | | | F-84A |
| 2SD 192 | " | " | 30 | 12 | 150 | 150 | 75 | 14 | 12 | 80 | 1 | 50 | | | | | | | F-84A |
| 2SD 193 | SW | " | 35 | 12 | 400 | 250 | 85 | 35 | 12 | 100 | 1 | 150 | | | | | | | F-84A |
| 2SD 194 | PA | " | 32 | 12 | 400 | 250 | 85 | 40 | 12 | 75 | 1 | 150 | | | | | | | F-84A |
| 2SD 195 | SW | " | 20 | 15 | 50 | 150 | 85 | 14 | 12 | 70 | 1 | 50 | 6 | —1 | | > 2.5 | | | F-12A |
| 2SD 196 | " | Si.DJ | 100 | 12 | 10A | 125W (Tc = 25°C) | 175 | 20 | 30 | 25 | 4 | 5A | | | | | | | F-109 |
| 2SD 196A | PA.SW | " | 100 | 12 | 10A | 150W (Tc = 25°C) | 175 | 20 | 30 | 25 | 4 | 5A | | | | | | | F-109 |
| 2SD 197 | SW | " | 130 | 12 | 10A | 125W (Tc = 25°C) | 175 | 20 | 30 | 25 | 4 | 5A | | | | | | | F-109 |
| 2SD 197A | PA.SW | " | 130 | 12 | 10A | 150W (Tc = 25°C) | 175 | 20 | 30 | 25 | 4 | 5A | | | | | | | F-109 |
| 2SD 198 | PA | Si.TMe | 300 | 6 | 1A | 25W (Tc = 25°C) | 150 | 5mA | 300 | 120 | 5 | 100 | 10 | —100 | | 45* | | | F-102 |
| 2SD 199 | " | " | 800 | 6 | 500 | 25W (Tc = 25°C) | 150 | 1mA | 800 | 55 | 10 | 200 | 10 | —100 | | 7* | | | F-102 |
| 2SD 200 | SW | Si.Me | 1500 | 5 | 2.5A | 10W (Tc = 25°C) | 115 | 1mA | 1500 | 2.5 | 5 | 2A | | | | | | | F-102 |
| 2SD 201 | PA.SW | Si.DJ | 90 | 7 | 6A | 50W (Tc = 25°C) | 150 | 50 | 40 | 50 | 4 | 3A | 12 | —500 | | 8 | | | F-102 |
| 2SD 202 | " | " | 110 | 7 | 6A | 50W (Tc = 25°C) | 150 | 50 | 40 | 50 | 4 | 3A | 12 | —500 | | 8 | | | F-102 |
| 2SD 203 | " | " | 130 | 7 | 6A | 50W (Tc = 25°C) | 150 | 50 | 40 | 50 | 4 | 3A | 12 | —500 | | 8 | | | F-102 |
| 2SD 204 | PA | Si.DB | 60 | | 700 | 9W (Tc = 25°C) | 150 | 3 | 50 | 80 | 2 | 300 | | | | | | | F-84B |
| 2SD 205 | " | Si.EP | 60 | 5 | 700 | 1W | 150 | 3 | 30 | 80 | 2 | 300 | | | | | | | F-97B |
| 2SD 206 | PA.SW | Si.DJ | 50 | 8 | 10A | 150W (Tc = 25°C) | 150 | 50mA | 30 | 20 | 5 | 5A | 10 | —1A | 50 | $f_{ae}$ 18kc | | | F-102 |
| 2SD 207 | " | " | 100 | 8 | 10A | 150W (Tc = 25°C) | 150 | 50mA | 30 | 20 | 5 | 5A | 10 | —1A | 50 | $f_{ae}$ 18kc | | | F-102 |
| 2SD 208 | " | " | 150 | 8 | 10A | 150W (Tc = 25°C) | 150 | 50mA | 30 | 20 | 5 | 5A | 10 | —1A | 50 | $f_{ae}$ 18kc | | | F-102 |
| 2SD 209 | | | | | | | | | | | | | | | | | | | |
| 2SD 210 | | | | | | | | | | | | | | | | | | | |
| 2SD 211 | PA.SW | SI.DJ | 60 | 7 | 10A | 100W (Tc = 25°C) | 150 | 50 | 40 | 35 | 4 | 5A | 12 | —500 | | 8 | | | F-102 |
| 2SD 212 | " | " | 90 | 7 | 10A | 100W (Tc = 25°C) | 150 | 50 | 40 | 35 | 4 | 5A | 12 | —500 | | 8 | | | F-102 |
| 2SD 213 | " | " | 110 | 7 | 10A | 100W (Tc = 25°C) | 150 | 50 | 40 | 35 | 4 | 5A | 12 | —500 | | 8 | | | F-102 |
| 2SD 214 | " | " | 130 | 7 | 10A | 100W (Tc = 25°C) | 150 | 50 | 40 | 35 | 4 | 5A | 12 | —500 | | 8 | | | F-102 |
| 2SD 215 | PA | " | 40 | 5 | 1A | 800 | 175 | 20 | 30 | 70 | 4 | 500 | 4 | —100 | | 1.2 | | | F-84B |
| 2SD 216 | " | " | 60 | 5 | 1A | 800 | 175 | 20 | 30 | 70 | 4 | 500 | 4 | —100 | | 1.2 | | | F-84B |
| 2SD 217 | " | Si.EMe | 120 | 7 | 7A | 60W (Tc = 25°C) | 150 | 2mA | 80 | 60 | | 4A | | | | | | | F-102 |
| 2SD 218 | " | " | 150 | 7 | 7A | 60W (Tc = 25°C) | 150 | 2mA | 80 | 60 | 5 | 4A | | | | | | | F-102 |
| 2SD 219 | PA.SW | Si.DJ | 40 | 7 | 1A | 500 | 150 | 1 | 20 | 100 | 4 | 200 | 5 | —100 | | 8 | | | F-84B |
| 2SD 220 | " | " | 80 | 7 | 1A | 500 | 150 | 1 | 20 | 80 | 4 | 200 | 5 | —100 | | 8 | | | F-84B |
| 2SD 221 | " | " | 110 | 7 | 1A | 500 | 150 | 1 | 20 | 60 | 4 | 200 | 5 | —100 | | 8 | | | F-84B |
| 2SD 222 | " | " | 40 | 7 | 1.5A | 10W (Tc = 25°C) | 150 | 10 | 20 | 80 | 4 | 500 | 5 | —100 | | 8 | | | F-97B |
| 2SD 223 | " | " | 80 | 7 | 1.5A | 10W (Tc = 25°C) | 150 | 10 | 20 | 60 | 4 | 500 | 5 | —100 | | 8 | | | F-97B |
| 2SD 224 | " | " | 110 | 7 | 1.5A | 10W (Tc = 25°C) | 150 | 10 | 20 | 40 | 4 | 500 | 5 | —100 | | 8 | | | F-97B |
| 2SD 225 | | | | | | | | | | | | | | | | | | | |
| 2SD 226 | PA | Si.DJ | 40 | 8 | 3A | 25W (Tc = 25°C) | 150 | 30 | 20 | 50 | 3 | 1A | 10 | —200 | | $f_{ae}$ 25kHz | | | F-99 |
| 2SD 227 | " | Si.EP | 30 | | 300 | 250 | 125 | 0.1 | 15 | 120 | 1 | 300 | 10 | —10 | 200 | | | | F-138 |
| 2SD 228 | " | " | 30 | | 300 | 400 | 125 | 0.1 | 15 | 120 | 1 | 300 | 10 | —10 | 200 | | | | F-44 |
| 2SD 229 | | | | | | | | | | | | | | | | | | | |
| 2SD 230 | | | | | | | | | | | | | | | | | | | |
| 2SD 231 | SW.AF | Si.TMe | 50 | 5 | 30A | 125W (Tc = 25°C) | 175 | 100 | 30 | 25 | 4 | 10A | | | | | | | F-102 |
| 2SD 232 | " | " | 120 | 7 | 30A | 125W (Tc = 25°C) | 175 | 1mA | 50 | 25 | 4 | 10A | | | | | | | F-102 |
| 2SD 233 | | | | | | | | | | | | | | | | | | | |
| 2SD 234 | PA | Si.DJ | 60 | 10 | 3A | 25W (Tc = 25°C) | 150 | 100 | 20 | 80 | 5 | 500 | 10 | —500 | | 1* | 250 | | F-119 |
| 2SD 235 | " | " | 50 | 10 | 3A | 25W (Tc = 25°C) | 150 | 100 | 20 | 80 | 5 | 500 | 10 | —500 | | 1* | 250 | | F-119 |

**Pin Configurations are 1. Emitter, 2. Base, 3. Collector, 4. Shield, unless otherwise specified. (Outline Dimensions: mm)**

| TYPE NO. | USES | MATERIAL STRUCTURE | $V_{CBO}$ (V) | $V_{EBO}$ (V) | $I_C$ (mA) | Pd (mW) | Tj (°C) | $I_{CBO}$ (uA) | VALUE OF DC/PULSE | | | BIAS | | hfe hfb* | fab fT (Mc) | Cob (pF) | $r_{bb'}$ $h_{ie(real)}$* (Ω) | CASE STYLE |
|---|---|---|---|---|---|---|---|---|---|---|---|---|---|---|---|---|---|---|
| | | | | | | | | $V_{CB}$(V) | hFE | $V_{CE}$(V) | $I_C$(mA) | $V_{CB}$(V) | $I_E$(mA) | | | | | |
| 2SD 236 | PA.SW | Si.DJ | 40 | 7 | 1A | 10W (Tc = 25°C) | 150 | 10 | 20 | 80 | 4 | 500 | 5 | −100 | | 8 | | | F-99 |
| 2SD 237 | " | | 3 80 | 7 | 1A | 10W (Tc = 25°C | 150 | 10 | 20 | 60 | 4 | 500 | 5 | −100 | | 8 | | | F-99 |
| 2SD 238 | " | " | 110 | 7 | 1A | 10W (Tc = 25°C) | 150 | 10 | 20 | 40 | 4 | 500 | 5 | −100 | | 8 | | | F-99 |
| 2SD 239 | | | | | | | | | | | | | | | | | | | |
| 2SD 240 | | | | | | | | | | | | | | | | | | | |
| 2SD 241 | PA.SW | Si.DJ | 60 | 7 | 4A | 25W (Tc = 25°C) | 150 | 10 | 20 | 80 | 4 | 1A | 10 | −200 | | 8 | | | F-100 |
| 2SD 242 | " | " | 90 | 7 | 4A | 25W (Tc = 25°C) | 150 | 10 | 20 | 80 | 4 | 1A | 10 | −200 | | 8 | | | F-100 |
| 2SD 243 | " | " | 110 | 7 | 4A | 25W (Tc = 25°C) | 150 | 10 | 20 | 60 | 4 | 1A | 10 | −200 | | 8 | | | F-100 |
| 2SD 244 | " | " | 130 | 7 | 4A | 25W (Tc = 25°C) | 150 | 10 | 20 | 60 | 4 | 1A | 10 | −200 | | 8 | | | F-100 |
| 2SD 245 | | | | | | | | | | | | | | | | | | | |
| 2SD 246 | PA.SW | Si.Me | 1500 | 5 | 4.5A | 16W (Tc = 25°C) | 115 | 1mA | 1500 | 2 | 10 | 4A | | | | | | | F-102 |
| 2SD 247 | PA | Si.TMe | 80 | 5 | 5A | 50W (Tc = 25°C) | 150 | 100 | 30 | 60 | 5 | 1A | | | | | | | F-102 |
| 2SD 248 | | | | | | | | | | | | | | | | | | | |
| 12SD 249 | PA.SW | Si.DJ | 50 | 5 | 30A | 125W (Tc = 25°C) | 175 | 100 | 30 | 25 | 4 | 10A | 4 | −1A | | 0.8* | | | F-102 |
| 2SD 250 | " | " | 100 | 7 | 30A | 125W (Tc = 25°C) | 175 | 100 | 50 | 25 | 4 | 10A | 4 | −1A | | 0.6* | | | F-102 |
| 2SD 251 | SW.AF | Si.TMe | 200 | 5 | 2A | 30W (Tc = 25°C) | 175 | 5 | 150 | 100 | 10 | 500 | | | | | | | F-99 |
| 2SD 252 | | | | | | | | | | | | | | | | | | | |
| 2SD 253 | | | | | | | | | | | | | | | | | | | |
| 2SD 254 | PA | Si.EMe | 70 | 5 | 3A | 20W (Tc = 25°C) | 150 | 1mA | 60 | 65 | 2 | 2A | | | | | | | |
| 2SD 255 | " | " | 70 | 5 | 3A | 20W (Tc = 25°C) | 150 | 1mA | 60 | 65 | 2 | 2A | | | | | | | F-134 |
| 2SD 256 | PA.SW | Si.DJ | 60 | 7 | 4A | 25W (Tc = 25°C) | 150 | 10 | 20 | 80 | 4 | 1A | 10 | −200 | | 8 | | | F-99 |
| 2SD 257 | " | " | 90 | 7 | 4A | 25W (Tc = 25°C) | 150 | 10 | 20 | 80 | 4 | 1A | 10 | −200 | | 8 | | | F-99 |
| 2SD 258 | " | " | 110 | 7 | 4A | 25W (Tc = 25°C) | 150 | 10 | 20 | 60 | 4 | 1A | 10 | −200 | | 8 | | | F-99 |
| 2SD 259 | " | " | 130 | 7 | 4A | 25W (Tc = 25°C) | 150 | 10 | 20 | 60 | 4 | 1A | 10 | −200 | | 8 | | | F-99 |
| 2SD 260 | PA | Si.TMe | 100 | 5 | 5A | 50W (Tc = 25°C | 150 | 100 | 30 | 60 | 4 | 1A | | | | | | | F-102 |
| 2SD 261 | " | Si.EP | 40 | 5 | 700 | 500 | 125 | 0.2 | 15 | 100 | 1 | 500 | | | | | | | F-44 |
| 2SD 262 | " | Si.TMe | 300 | | 12A | 125W (Tc = 25°C) | 150 | 100 | 50 | 50 | 3 | 5A | | | | | | | F-102 |
| 2SD 263 | | | | | | | | | | | | | | | | | | | |
| 2SD 264 | | | | | | | | | | | | | | | | | | | |
| 2SD 265 | PA.SW | Si.T | 800 | 10 | 6A | 100W (Tc = 25°C) | 150 | 2mA | 800 | 20 | 5 | 3A | | | | | | | F-102 |
| 2SD 266 | PA.SW | Si.T | 800 | 10 | 6A | 100W (Tc = 25°C) | 150 | 2mA | 800 | 40 | 5 | 3A | | | | | | | F-102 |
| 2SD 267 | | | | | | | | | | | | | | | | | | | |
| 2SD 268 | | | | | | | | | | | | | | | | | | | |
| 2SD 269 | | | | | | | | | | | | | | | | | | | |
| 2SD 270 | | | | | | | | | | | | | | | | | | | |
| 2SD 271 | PA | Si.T | 800 | 10 | 2A | 30W (Tc = 25°C) | 150 | 2mA | 800 | 20 | 5 | 1A | 12 | −500 | | $f_{ae}$ 150kHz | | | F-100 |
| 2SD 272 | " | " | 800 | 10 | 2A | 30W (Tc = 25°C) | 150 | 2mA | 800 | 40 | 5 | 1A | 12 | −500 | | $f_{ae}$ 150kHz | | | F-100 |
| 2SD 273 | PA.SW | " | 800 | 10 | 5A | 80W (Tc = 25°C) | 150 | 2mA | 800 | 20 | 5 | 2A | 12 | −1A | | $f_{ae}$ 150kHz | | | F-102 |
| 2SD 274 | " | " | 800 | 10 | 5A | 80W (Tc = 25°C) | 150 | 2mA | 800 | 40 | 5 | 2A | 12 | −1A | | $f_{ae}$ 150kHz | | | F-102 |
| 2SD 275 | | | | | | | | | | | | | | | | | | | |
| 2SD 276 | | | | | | | | | | | | | | | | | | | |
| 2SD 277 | | | | | | | | | | | | | | | | | | | |
| 2SD 278 | | | | | | | | | | | | | | | | | | | |
| 2SD 279 | | | | | | | | | | | | | | | | | | | |
| 2SD 280 | | | | | | | | | | | | | | | | | | | |
| 2SD 281 | | | | | | | | | | | | | | | | | | | |
| 2SD 282 | | | | | | | | | | | | | | | | | | | |
| 2SD 283 | PA.SW | Si.E | 120 | 5 | 5A | 25W (Tc = 25°C) | 150 | 200 | 40 | 55 | 1 | 5A | | | | | | | F-134 |
| 2SD 284 | " | " | 120 | 5 | 5A | 25W (Tc = 25°C) | 150 | 200 | 40 | 40 | 1 | 5A | | | | | | | F-134 |
| 2SD 285 | " | " | 100 | 5 | 5A | 25W (Tc = 25°C) | 150 | 200 | 40 | 40 | 1 | 5A | | | | | | | F-134 |
| 2SD 286 | PA | Si.TMe | 180 | 7 | 10A | 100W (Tc = 25°C) | 150 | 300 | 100 | 75 | 5 | 2A | | | | | | | F-102 |
| 2SD 287 | " | " | 200 | 7 | 10A | 100W (Tc = 25°C) | 150 | 300 | 100 | 75 | 5 | 2A | | | | | | | F-102 |
| 2SD 288 | " | Si.TP | 80 | 5 | 2A | 20W (Tc = 25°C) | 150 | 50 | 50 | 80 | 5 | 500 | | | | | | | F-151 |
| 2SD 289 | " | " | 80 | 5 | 2A | 20W (Tc = 25°C) | 150 | 50 | 50 | 80 | 5 | 500 | | | | | | | F-152 |
| 2SD 290 | PA.SW | Si.TMe | 80 | | 5A | 10W (Tc = 25°C) | 120 | 100 | 150 | 100 | 3 | 2A | | | | | | | F-153 |
| 2SD 291 | RF.PA | Si.DJ | 70 | 10 | 3A | 18W (Tc = 25°C) | 150 | 20 | 30 | 100 | 1 | 100 | 10 | −500 | | 4* | 250 | | F-153 |
| 2SD 292 | PA | " | 70 | 10 | 3A | 18W (Tc = 25°C) | 150 | 20 | 30 | 100 | 1 | 100 | 10 | −500 | | 4* | 250 | | F-153 |
| 2SD 293 | " | Si.T | 800 | 10 | 10A | 125W (Tc = 25°C) | 150 | 3mA | 800 | 20 | 5 | 5A | | | | | | | F-102 |
| 2SD 294 | " | " | 800 | 10 | 10A | 125W (Tc = 25°C) | 150 | 3mA | 800 | 40 | 5 | 5A | | | | | | | F-102 |
| 2SD 295 | PA.SW | Si.T | 800 | 10 | 30 A | 200W (Tc = 25°C) | 150 | 5mA | 800 | 20 | 5 | 10A | 12 | −2.5A | | $f_{ae}$ 150kHz | | | F-154 |

**Pin Configurations are 1. Emitter, 2. Base, 3. Collector, 4. Shield, unless otherwise specified. (Outline Dimensions: mm)**

| TYPE NO. | USES | MATERIAL STRUCTURE | $V_{CBO}$ (V) | $V_{EBO}$ (V) | $I_C$ (mA) | $P_d$ (mW) | $T_j$ (°C) | $I_{CBO}$ (uA) | VALUE OF DC/PULSE | | | | BIAS | | hfe hfb* | fab fT (Mc) | Cob (pF) | $r_{bb'}$ $h_{ie(real)}$* (Ω) | CASE STYLE |
|---|---|---|---|---|---|---|---|---|---|---|---|---|---|---|---|---|---|---|---|
| | | | | | | | | | $V_{CB}$(V) | hFE | $V_{CE}$(V) | $I_C$(mA) | $V_{CB}$(V) | $I_e$(mA) | | | | | |
| 2SD 296 | PA.SW | Si.T | 800 | 10 | 30A | 200W (Tc = 25°C) | 150 | 5mA | 800 | 40 | 5 | 10A | 12 | —2.5A | | fae 150kHz | | | F-154 |
| 2SD 297 | " | Si.TMe | 150 | 7 | 5A | 25W (Tc = 25°C | 150 | 500 | 80 | 70 | 2 | 2A | | | | | | | F-134 |
| 2SD 298 | | | | | | | | | | | | | | | | | | | |
| 2SD 299 | PA.SW | Si.Me | 1500 | 5 | 5A | 16W (Tc = 25°C) | 115 | 1mA | 1500 | >2 | 5 | 4A | | | | | | | F-102 |
| 2SD 300 | " | " | 1500 | 5 | 5A | 16W (Tc = 25°C) | 115 | 1mA | 1500 | >3 | 10 | 2.5A | | | | | | | F-102 |
| 2SD 301 | SW | Si.DJ | 80 | 6 | 10A | 50W (Tc = 25°C) | 175 | 30 | 30 | 2500 | 4 | 5A | | | | | | | F-102 |
| 2SD 302 | | | | | | | | | | | | | | | | | | | |
| 2SD 303 | | | | | | | | | | | | | | | | | | | |
| 2SD 304 | | | | | | | | | | | | | | | | | | | |
| 2SD 305 | | | | | | | | | | | | | | | | | | | |
| 2SD 306 | | | | | | | | | | | | | | | | | | | |
| 2SD 307 | | | | | | | | | | | | | | | | | | | |
| 2SD 308 | | | | | | | | | | | | | | | | | | | |
| 2SD 309 | | | | | | | | | | | | | | | | | | | |
| 2SD 310 | PA.SW | Si.T | 800 | 10 | 15A | 150W (Tc = 25°C) | 150 | 3mA | 800 | 20 | 5 | 7.5A | 12 | —2A | | fae 150kHz | | | |
| 2SD 311 | " | " | 800 | 10 | 15A | 150W (Tc = 25°C) | 150 | 3mA | 800 | 40 | 5 | 7.5A | 12 | —2A | | fae 150kHz | | | F-102 |
| 2SD 312 | PA | Si.TMe | 800 | 6 | 500 | 25W (Tc = 25°C) | 150 | 1mA | 800 | 60 | 10 | 600 | 10 | —100 | | 5* | | | Fp102 |
| 2SD 313 | " | Si.T | 60 | 5 | 3A | 30W (Tc = 25°C) | 150 | 100 | 20 | 90 | 2 | 1A | | | | | | | Fp162 |
| 2SD 314 | " | " | 60 | 5 | 3A | 30W (Tc = 25°C) | 150 | 100 | 20 | 90 | 2 | 1A | | | | | | | F-163 |
| 2SD 315 | " | " | 60 | 5 | 4A | 35W (Tc = 25°C) | 150 | 100 | 20 | 90 | 2 | 1A | | | | | | | F-99 |
| 2SD 316 | " | Si.TMe | 80 | 5 | 7A | 80W (Tc = 25°C) | 150 | 100 | 50 | 70 | 2 | 3A | | | | | | | F-102 |
| 2SD 317 | PA | Si.T | 60 | 8 | 3A | 25W (Tc = 25°C) | 150 | 30 | 20 | 60 | 3 | 1A | 10 | —200 | | fae = 25kHz | | | F-155 |
| 2SD 318 | " | " | 60 | 8 | 3A | 25W (Tc = 25°C) | 150 | 30 | 20 | 60 | 3 | 1A | 10 | —200 | | fae = 25kHz | | | F-156 |
| 2SD 319 | " | Si.DJ | 110 | 7 | 10A | 100W (Tc = 25°C) | 150 | 30 | 40 | 35 | 4 | 5A | 10 | —500 | | 1* | | | F-102 |
| 2SD 320 | PA.SW | Si.T | 300 | 6 | 2A | 50W (Tc = 25°C) | 150 | 100 | 100 | | 15 | 1A | | | | | | | |
| 2SD 321 | " | Si.TMe | 250 | 6 | 6A | 60W (Tc = 25°C) | 150 | 2mA | 250 | 40 | 5 | 5A | | | | | | | F-102 |
| 2SD 322 | PA | " | 120 | 7 | 7A | 80W (Tc = 25°C) | 150 | 300 | 120 | 60 | 5 | 4A | | | | | | | F-102 |
| 2SD 323 | " | " | 150 | 7 | 7A | 80W (Tc = 25°C) | 150 | 300 | 150 | 60 | 5 | 4A | | | | | | | F-102 |
| 2SD 324 | " | " | 300 | 3 | 100 | 10W (Tc = 25°C) | 150 | 100 | 300 | 80 | 10 | 50 | | | | | | | F-153 |
| 2SD 325 | " | Si.T | 35 | 5 | 1.5A | 10W (Tc = 25°C) | 150 | 100 | 20 | 90 | 2 | 1A | 5 | —500 | | 8* | | | F-268 |
| 2SD 326 | PA.SW | Si.TMe | 330 | 5 | 1A | 23W (Tc = 25°C) | 150 | 15 | 100 | 80 | 5 | 100 | | | | 6.5* | | | F-100 |
| 2SD 327 | PA | Si.E | 40 | 5 | 500 | 250 | 125 | 0.2 | 25 | 140 | 1 | 100 | | | | | | | F-138 |
| 2SD 328 | PA.SW | Si.EP | 100 | 7 | 1.5A | 800 | 150 | 1 | 60 | 100 | 2 | 200 | | | | | | | F-84B |
| 2SD 329 | SW | Si.DJ | 70 | 5 | 1A | 800 | 175 | 20 | 30 | 40 | 4 | 1A | | | | | | | F-84B |
| 2SD 330 | PA | Si.T | 50 | 5 | 2A | 20W (Tc = 25°C) | 150 | 100 | 20 | 90 | 2 | 1A | | | | | | | F-162 |
| 2SD 331 | " | " | 50 | 5 | 2A | 20W (Tc = 25°C) | 150 | 100 | 20 | 90 | 2 | 1A | | | | | | | F-163 |
| 2SD 332 | | | | | | | | | | | | | | | | | | | |
| 2SD 333 | | | | | | | | | | | | | | | | | | | |
| 2SD 334 | PA | Si.DJ | 110 | 7 | 6A | 75W (Tc = 25°C) | 150 | 1mA | 110 | 100 | 4 | 1A | 10 | —500 | | fae 25kHz | | | F-102 |
| 2SD 335 | " | Si.EMe | 80 | 7 | 3A | 30W (Tc = 25°C) | 150 | 300 | 60 | 80 | 5 | 2A | | | | | | | F-102 |
| 2SD 336 | " | Si.E | 40 | 5 | 500 | 750 | 135 | 0.2 | 25 | 140 | 1 | 100 | | | | | | | F-177 |
| 2SD 337 | | | | | | | | | | | | | | | | | | | |
| 2SD 338 | PA | Si.EMe | 70 | 8 | 7A | 60W (Tc = 25°C) | 150 | 100 | 50 | 50 | 2 | 3A | | | | | | | F-102 |
| 2SD 339 | " | " | 90 | 8 | 10A | 80W (Tc = 25°C) | 150 | 100 | 50 | 50 | 2 | 4A | | | | | | | F-102 |
| 2SD 340 | " | " | 110 | 8 | 12A | 100W (Tc = 25°C) | 150 | 100 | 50 | 50 | 2 | 5A | | | | | | | F-102 |
| 2SD 341 | PA.SW | Si.DJ | 100 | 7 | 15A | 115W (Tc = 25°C) | 200 | 5mA | 100 | 40 | 4 | 4A | | | | | | | F-102 |
| 2SD 342 | PA | " | 70 | | 3A | 35W (Tc = 25°C) | 150 | 100 | 30 | 100 | 1 | 100 | | | | | | | F-240 |
| 2SD 343 | " | " | 70 | | 3A | 35W (Tc = 25°C) | 150 | 100 | 30 | 100 | 1 | 100 | | | | | | | F-241 |
| 2SD 344 | " | " | 70 | | 3A | 35W (Tc = 25°C) | 150 | 100 | 30 | 100 | 1 | 100 | | | | | | | F-240 |
| 2SD 345 | " | " | 70 | | 3A | 35W (Tc = 25°C) | 150 | 100 | 30 | 100 | 1 | 100 | | | | | | | F-241 |
| 2SD 346 | " | Si.EMe | 60 | | 5A | 25W (Tc = 25°C) | 150 | 100 | 50 | 50 | 2 | 2.5A | | | | | | | F-240 |
| 2SD 347 | " | " | 60 | | 5A | 25W (Tc = 25°C) | 150 | 100 | 50 | 50 | 2 | 2.5A | | | | | | | F-241 |
| 2SD 348 | SW | Si.TMe | 1500 | 6 | 7A | 50W (Tc = 25°C) | 150 | 100 | 100 | 7 | 5 | 5A | | | | | | | F-102 |
| 2SD 349 | AF | Si.E | 30 | 5 | 50 | 150 | 125 | 0.1 | 25 | 500 | 3 | 0.5 | 3 | —1 | | | | | F-176 |
| 2SD 350 | SW | Si.Me | 1500 | 5 | 5A | 22W (Tc = 90°C) | 115 | 1mA | 1500 | >3 | 10 | 4A | | | | | | | F-102 |
| 2SD 351 | PA | Si.TMe | 650 | 6 | 5A | 80W (Tc = 25°C) | 150 | 5mA | 650 | 15 | 5 | 5A | 10 | —500 | | 40* | 150 | | F-102 |
| 2SD 352 | " | Ge.A | 32 | 10 | 1A | 650 | 90 | 25 | 10 | 150 | 0.5 | 300 | 2 | —10 | | fae >10kHz | | | F-12A |
| 2SD 353 | " | Si.TMe | 150 | 6 | 2A | 60W (Tc = 25°C) | 150 | 10 | 30 | 80 | 5 | 1A | 5 | —1A | | 8* | | | F-102 |
| 2SD 354 | | | | | | | | | | | | | | | | | | | |
| 2SD 355 | PA | Si.EP | 30 | 4 | 1A | 800 | 135 | 1 | 25 | 150 | 1 | 500 | | | | 100* | | | F-242 |

**Pin Configurations are 1. Emitter, 2. Base, 3. Collector, 4. Shield, unless otherwise specified. (Outline Dimensions: mm)**

| TYPE NO. | USES | MATERIAL STRUCTURE | $V_{CBO}$ (V) | $V_{EBO}$ (V) | $I_C$ (mA) | Pd (mW) | Tj (°C) | $I_{CBO}$ (uA) | VALUE OF DC/PULSE | | | | BIAS | | hfe hfb* | fab fT (Mc) | Cob (pF) | $r_{bb'}$ $h_{ie(real)}$* (Ω) | CASE STYLE |
|---|---|---|---|---|---|---|---|---|---|---|---|---|---|---|---|---|---|---|---|
| | | | | | | | | | $V_{CB}$(V) | hFE | $V_{CE}$(V) | $I_C$(mA) | $V_{CB}$(V) | $I_e$(mA) | | | | | |
| 2SD 356 | PA | Si.EP | 90 | 5 | 800 | 10W (Tc = 25°C) | 150 | 10 | 25 | 100 | 4 | 300 | | | | | | | F-180 |
| 2SD 357 | " | " | 110 | 5 | 800 | 10W (Tc = 25°C) | 150 | 10 | 25 | 100 | 4 | 300 | | | | | | | F-180 |
| 2SD 358 | " | " | 130 | 5 | 800 | 10W (Tc = 25°C) | 150 | 10 | 25 | 100 | 4 | 300 | | | | | | | F-180 |
| 2SD 359 | " | " | 40 | 5 | 2A | 10W (Tc = 25°C) | 150 | 1 | 25 | 120 | 4 | 500 | | | | | | | F-180 |
| 2SD 360 | " | " | 40 | 5 | 2A | 10W (Tc = 25°C) | 150 | 1 | 25 | 120 | 4 | 500 | | | | | | | F-180 |
| 2SD 361 | " | " | 60 | 5 | 1.5A | 10W (Tc = 25°C) | 150 | 1 | 25 | 100 | 4 | 500 | | | | | | | F-180 |
| 2SD 362 | | | | | | | | | | | | | | | | | | | |
| 2SD 363 | SW | Si.TMe | 250 | 6 | 30A | 200W (Tc = 25°C) | 175 | 100 | 200 | 30 | 5 | 15A | | | | | | | F-106 |
| 2SD 364 | " | " | 450 | 6 | 30A | 200W (Tc = 25°C) | 175 | 100 | 400 | 30 | 5 | 15A | | | | | | | F-106 |
| 2SD 365 | PA | " | 60 | 5 | 3A | 25W (Tc = 25°C) | 150 | 30 | 20 | 70 | 3 | 1A | 10 | —200 | | $f_{ae}$ 70kHz | | | F-178 |
| 2SD 366 | " | " | 60 | 5 | 3A | 25W (Tc = 25°C) | 150 | 30 | 20 | 70 | 3 | 1A | 10 | —200 | | $f_{ae}$ 70kHz | | | F-179 |
| 2SD 367 | " | Ge.A | 25 | 6 | 300 | 150 | 85 | 20 | 12 | 150 | 0.5 | 150 | 2 | —10 | | $f_{ae}$ > 10kHz | | | F-12A |
| 2SD 368 | SW | Si.TMe | 1300 | 6 | 5A | 50W (Tc = 25°C) | 150 | 100 | 100 | 8 | 5 | 4A | | | | | | | F-102 |
| 2SD 369 | PA | Si.DJ | 80 | 10 | 10A | 100W (Tc = 25°C) | 150 | 10A | 80 | 100 | 5 | 1A | | | | | | | F-102 |
| 2SD 370 | | | | | | | | | | | | | | | | | | | F-102 |
| 2SD 371 | PA | Si.TMe | 90 | 5 | 6A | 50W (Tc = 25°C) | 150 | 100 | 50 | 40-240 | 5 | 1A | 5 | —1A | | 8* | 100 | | F-102 |
| 2SD 372 | SW | " | 150 | 6 | 30A | 200W (Tc = 25°C) | 175 | 100 | 100 | 40 | 5 | 20A | | | | | | | F-106 |
| 2SD 373 | " | " | 250 | 6 | 30A | 200W (Tc = 25°C) | 175 | 100 | 200 | 30 | 5 | 15A | | | | | | | F-106 |
| 2SD 374 | " | " | 450 | 6 | 30A | 200W (Tc = 25°C) | 175 | 100 | 400 | 30 | 5 | 15A | | | | | | | F-106 |
| 2SD 375 | PA.SW | " | 150 | 7 | 10A | 100W (Tc = 25°C) | 175 | 100 | 100 | 60 | 5 | 5A | | | | | | | F-102 |
| 2SD 376 | " | " | 250 | 7 | 10A | 100W (Tc = 25°C) | 175 | 100 | 200 | 40 | 5 | 5A | | | | | | | F-102 |
| 2SD 377 | " | " | 450 | 7 | 10A | 100W (Tc = 25°C) | 175 | 100 | 400 | 30 | 5 | 5A | | | | | | | F-102 |
| 2SD 378 | PA.SW | Si.E | 100 | 12 | 2A | 1W | 175 | 0.5 | 60 | 80 | 2 | 500 | | | | | | | F-84B |
| 2SD 379 | PA | Si.EMe | 80 | 5 | 5A | 60W (Tc = 25°C) | 150 | 1mA | 50 | 100 | 4 | 1A | 10 | —500 | | 10* | | | F-102 |
| 2SD 380 | SW | Si.Me | 1500 | 5 | 5A | 50W (Tc = 25°C) | 130 | 1mA | 1500 | 5 | 10 | 5A | | | | | | | F-102 |
| 2SD 381 | PA | Si.E | 140 | 5 | 1.5A | 20W (Tc = 25°C) | 150 | 1 | 120 | 90 | 5 | 300 | | | | | | | F-151 |
| 2SD 382 | " | " | 140 | 5 | 1.5A | 20W (Tc = 25°C) | 150 | 1 | 120 | 90 | 5 | 300 | | | | | | | F-152 |
| 2SD 383 | " | Si.T | 300 | 6 | 5A | 100W (Tc = 25°C) | 150 | 10 | 250 | 80 | 10 | 500 | | | | | | | F-102 |
| 2SD 384 | PA.SW | Si.DJ | 80 | 4 | 7A | 30W (Tc = 25°C) | 150 | 500 | 80 | 5000 | 5 | 5A | | | | | | | F-204 |
| 2SD 385 | " | " | 100 | 4 | 7A | 30W (Tc = 25°C) | 150 | 500 | 100 | 5000 | 5 | 5A | | | | | | | F-204 |
| 2SD 386 | PA | Si.TMe | 200 | 6 | 2A | 25W (Tc = 25°C) | 150 | 1mA | 180 | 100 | 2 | 500 | | | | | | | F-268 |
| 2SD 387 | " | " | 200 | 6 | 2A | 25W (Tc = 25°C) | 150 | 1mA | 180 | 100 | 2 | 500 | | | | | | | F-267 |
| 2SD 388 | " | " | 150 | 7 | 8A | 80W (Tc = 25°C) | 150 | 100 | 100 | 80 | 5 | 1A | | | | | | | F-102 |
| 2SD 389 | " | Si.DJ | 60 | 8 | 3A | 25W (Tc = 25°C) | 150 | 30 | 20 | 70 | 3 | 1A | 10 | —200 | | $f_{ae}$ 25kHz | | | F-178 |
| 2SD 390 | " | " | 60 | 8 | 3A | 25W (Tc = 25°C) | 150 | 30 | 20 | 70 | 3 | 1A | 10 | —200 | | $f_{ae}$ 25kHz | | | F-179 |
| 2SD 391 | | | | | | | | | | | | | | | | | | | |
| 2SD 392 | PA | Si.EP | 20 | 5 | 300 | 300 | 125 | 1 | 20 | 150 | 2 | 150 | 6 | —10 | | 150* | | | F-138B |
| 2SD 393 | PA.SW | Si.EbMe | 500 | 5 | 6A | 100W (Tc = 25°C) | 150 | 10 | 400 | 7 | 5 | 5A | | | | | | | F-102 |
| 2SD 394 | " | " | 700 | 5 | 6A | 100W (Tc = 25°C) | 150 | 10 | 450 | 7 | 5 | 5A | | | | | | | F-102 |
| 2SD 395 | " | " | 700 | 5 | 8A | 100W (Tc = 25°C) | 150 | 10 | 450 | 8 | 5 | 7A | | | | | | | F-102 |
| 2SD 396 | " | Si.TMe | 700 | 6 | 15A | 125W (Tc = 25°C) | 150 | 5 | 400 | 30 | 2 | 7.5A | | | | | | | F-102 |
| 2SD 397 | | | | | | | | | | | | | | | | | | | |
| 2SD 398 | | | | | | | | | | | | | | | | | | | |
| 2SD 399 | | | | | | | | | | | | | | | | | | | |
| 2SD 400 | PA | Si.EP | 25 | 5 | 1A | 750 | 125 | 1 | 20 | 150 | 2 | 50 | | | | | | | F-294 |
| 2SD 401 | " | Si.TMe | 200 | 5 | 2A | 20W (Tc = 25°C) | 150 | 50 | 150 | 90 | 10 | 400 | 10 | —400 | | 5* | | | F-268 |
| 2SD 402 | " | " | 200 | 5 | 2A | 20W (Tc = 25°C) | 150 | 50 | 150 | 90 | 10 | 400 | 10 | —400 | | 5* | | | F-267 |
| 2SD 403 | | | | | | | | | | | | | | | | | | | |
| 2SD 404 | PA | Si.DJ | 50 | 7 | 6A | 40W (Tc = 25°C) | 150 | 100 | 40 | 200 | 1 | 1A | | | | | | | F-119 |
| 2SD 405 | " | Si.E | 70 | 7 | 2A | 1W | 175 | 1 | 50 | 4000 | 2 | 1A | | | | | | | F-84B |
| 2SD 406 | " | " | 100 | 7 | 2A | 1W | 175 | 1 | 70 | 4000 | 2 | 1A | | | | | | | F-84B |
| 2SD 407 | " | Si.EMe | 100 | 7 | 5A | 25W (Tc = 25°C) | 175 | 10 | 80 | 4000 | 2 | 5A | | | | | | | F-83 |
| 2SD 408 | " | " | 150 | 7 | 5A | 25W (Tc = 25°C) | 175 | 10 | 100 | 3000 | 2 | 5A | | | | | | | F-83 |
| 2SD 409 | " | " | 100 | 7 | 5A | 30W (Tc = 25°C) | 175 | 10 | 80 | 4000 | 2 | 5A | | | | | | | F-134 |
| 2SD 410 | " | " | 150 | 7 | 5A | 30W (Tc = 25°C) | 175 | 10 | 100 | 3000 | 2 | 5A | | | | | | | F-134 |
| 2SD 411 | | | | | | | | | | | | | | | | | | | |
| 2SD 412 | | | | | | | | | | | | | | | | | | | |
| 2SD 413 | PA.SW | Si.TMe | 200 | 5 | 500 | 800 | 175 | 5 | 150 | 65 | 5 | 200 | 5 | —50 | | 25* | 12.5 | | F-84B |
| 2SD 414 | PA | Si.E | 120 | 5 | 800 | 5W (Tc = 25°C) | 150 | 1 | 80 | 80 | 5 | 200 | | | | | | | F-225 |
| 2SD 415 | " | " | 120 | 5 | 800 | 5W (Tc = 25°C) | 150 | 1 | 80 | 80 | 5 | 200 | | | | | | | F-225 |

**Pin Configurations are 1. Emitter, 2. Base, 3. Collector, 4. Shield, unless otherwise specified. (Outline Dimensions: mm)**

| TYPE NO. | USES | MATERIAL STRUCTURE | $V_{CBO}$ (V) | $V_{EBO}$ (V) | Ic (mA) | Pd (mW) | Tj (°C) | $I_{CBO}$ (uA) | VALUE OF DC/PULSE | | | | BIAS | | hfe hfb* | fab fT (Mc) | Cob (pF) | $r_{bb'}$ $h_{ie(real)}$* (Ω) | CASE STYLE |
|---|---|---|---|---|---|---|---|---|---|---|---|---|---|---|---|---|---|---|---|
| | | | | | | | | | $V_{CB}$(V) | hFE | $V_{CE}$(V) | $I_C$(mA) | $V_{CB}$(V) | $I_e$(mA) | | | | | |
| 2SD 416 | SW | Si.TMe | 1500 | 6 | 2A | 50W (Tc = 25°C) | 150 | 1mA | 1500 | 5 | 5 | 5.5A | | | | | | | F-102 |
| 2SD 417 | " | " | 250 | 6 | 7A | 75W (Tc = 25°C) | 175 | 10 | 30 | 25 | 5 | 3A | 6 | —300 | | 30* | | | F-102 |
| 2SD 418 | " | " | 1000 | 5 | 5A | 80W (Tc = 25°C) | 150 | 1mA | 1000 | 15 | 5 | 5A | | | | | | | F-102 |
| 2SD 419 | " | Si.DJ | 100 | 6 | 7A | 40W (Tc = 25°C) | 150 | 1mA | 100 | 2500 | 4 | 7A | | | | 6* | | | F-99 |
| 2SD 420 | " | " | 120 | 6 | 7A | 40W (Tc = 25°C) | 150 | 1mA | 120 | 2500 | 4 | 7A | | | | 6* | | | F-99 |
| 2SD 421 | " | " | 140 | 6 | 7A | 40W (Tc = 25°C) | 150 | 1mA | 140 | 2500 | 4 | 7A | | | | 6* | | | F-99 |
| 2SD 422 | SW | Si.TMe | 250 | 6 | 4A | 30W (Tc = 25°C) | 175 | 100 | 150 | 20 | 5 | 3A | 6 | —300 | | 30* | | | F-99 |
| 2SD 423 | " | Si.TP | 250 | 6 | 4A | 30W (Tc = 25°C) | 175 | 100 | 150 | 20 | 5 | 3A | | | | | | | F-99 |
| 2SD 424 | PA | Si.TMe | 160 | 5 | 15A | 150W (Tc = 25°C) | 150 | 100 | 80 | 40-140 | 5 | 2A | 5 | —2A | | 6* | 300 | | F-102 |
| 2SD 425 | " | " | 140 | 5 | 12A | 100W (Tc = 25°C) | 150 | 100 | 60 | 40-140 | 5 | 2A | 5 | —2A | | 6* | 220 | | F-102 |
| 2SD 426 | " | " | 120 | 5 | 12A | 100W (Tc = 25°C) | 150 | 100 | 60 | 40-140 | 5 | 2A | 5 | —2A | | 6* | 220 | | F-102 |
| 2SD 427 | " | " | 120 | 5 | 8A | 80W (Tc = 25°C) | 150 | 100 | 60 | 40-140 | 5 | 1A | 5 | —1A | | 7* | 170 | | F-102 |
| 2SD 428 | " | " | 100 | 5 | 7A | 60W (Tc = 25°C) | 150 | 100 | 50 | 40-140 | 5 | 1A | 5 | —1A | | 7* | 140 | | F-102 |
| 2SD 429 | PA.SW | Si.T | 800 | 6 | 15A | 100W (Tc = 25°C) | 150 | 5 | 60 | 15 | 5 | 9A | | | | | | | F-102 |
| 2SD 430 | PA | Si.TMe | 120 | 10 | 5A | 50W (Tc = 25°C) | 150 | 100 | 30 | 60 | 4 | 1A | 5 | —0.5A | | 15* | | | F-102 |
| 2SD 431 | " | " | 120 | 10 | 7A | 60W (Tc = 25°C) | 150 | 100 | 30 | 60 | 5 | 1A | 5 | —0.5A | | 20* | | | F-102 |
| 2SD 432 | " | " | 130 | 10 | 10A | 100W (Tc = 25°C) | 150 | 100 | 30 | 60 | 5 | 1A | 5 | —0.5A | | 15* | | | F-102 |
| 2SD 433 | " | " | 250 | 10 | 10A | 100W (Tc = 25°C) | 150 | 100 | 30 | 60 | 5 | 1A | 5 | —0.5A | | 15* | | | F-102 |
| 2SD 434 | " | " | 200 | 10 | 20A | 200W (Tc = 25°C) | 150 | 100 | 100 | 60 | 5 | 1A | | | | | | | F-102 |
| 2SD 435 | " | " | 300 | 10 | 20A | 200W (Tc = 25°C) | 150 | 100 | 100 | 60 | 5 | 1A | | | | | | | F-102 |
| 2SD 436 | " | " | 400 | 10 | 20A | 200W (Tc = 25°C) | 150 | 100 | 100 | 60 | 5 | 1A | | | | | | | F-102 |
| 2SD 437 | " | Si.T | 600 | 6 | 10A | 80W | 150 | 1mA | 600 | 10 | 5 | 6A | | | | | | | F-102 |
| 2SD 438 | | | | | | | | | | | | | | | | | | | |
| 2SD 439 | | | | | | | | | | | | | | | | | | | |
| 2SD 440 | | | | | | | | | | | | | | | | | | | |
| 2SD 441 | | | | | | | | | | | | | | | | | | | |
| 2SD 442 | | | | | | | | | | | | | | | | | | | |
| 2SD 443 | | | | | | | | | | | | | | | | | | | |
| 2SD 444 | | | | | | | | | | | | | | | | | | | |
| 2SD 445 | | | | | | | | | | | | | | | | | | | |
| 2SD 446 | | | | | | | | | | | | | | | | | | | |
| 2SD 447 | | | | | | | | | | | | | | | | | | | |
| 2SD 448 | | | | | | | | | | | | | | | | | | | |
| 2SD 449 | | | | | | | | | | | | | | | | | | | |
| 2SD 450 | | | | | | | | | | | | | | | | | | | |
| 2SD 451 | | | | | | | | | | | | | | | | | | | |
| 2SD 452 | | | | | | | | | | | | | | | | | | | |
| 2SD 453 | | | | | | | | | | | | | | | | | | | |
| 2SD 454 | | | | | | | | | | | | | | | | | | | |
| 2SD 455 | | | | | | | | | | | | | | | | | | | |
| 2SD 456 | | | | | | | | | | | | | | | | | | | |
| 2SD 457 | PA | Si.TMe | 250 | 6 | 55A | 200W (Tc = 25°C) | 175 | 100 | 200 | 30 | 5 | 50A | | | | | | | F-106 |
| 2SD 458 | " | " | 600 | 5 | 5A | 80W (Tc = 25°C) | 150 | 1mA | 600 | 20 | 5 | 5A | | | | | | | F-102 |
| 2SD 459 | PA.SW | Si.DJ | 80 | 4 | 7A | 50W (Tc = 25°C) | 150 | 100 | 80 | 5000 | 5 | 5A | 10 | —1A | | $f_{ae}$ 20kc | | | F-257 |
| 2SD 460 | " | " | 100 | 4 | 7A | 50W (Tc = 25°C) | 150 | 100 | 100 | 5000 | 5 | 5A | 10 | —1A | | $f_{ae}$ 20kc | | | F-257 |
| 2SD 461 | " | Si.T | 250 | 8 | 3A | 80W (Tc = 25°C) | 150 | 100 | 250 | 90 | 5 | 1A | | | | | | | F-102 |
| 2SD 462 | | | | | | | | | | | | | | | | | | | |
| 2SD 463 | PA.SW | Si.DJ | 80 | 4 | 7A | 80W (Tc = 25°C) | 150 | 500 | 60 | 3000 | 5 | 5A | 10 | —1A | | $f_{ae}$ 20kc | | | F-102 |
| 2SD 464 | " | " | 100 | 4 | 7A | 80W (Tc = 25°C) | 150 | 500 | 80 | 3000 | 5 | 5A | 10 | —1A | | $f_{ae}$ 20kc | | | F-102 |
| 2SD 465 | " | Si.T | 500 | 4 | 50A | 400W (Tc = 25°C) | 150 | 1mA | 500 | 500 | 5 | 50A | | | | | | | F-258 |
| 2SD 466 | " | " | 600 | 4 | 50A | 400W (Tc = 25°C) | 150 | 1mA | 600 | 600 | 5 | 50A | | | | | | | F-258 |
| 2SD 467 | PA | Si.EP | 25 | 5 | 700 | 500 | 150 | 1 | 20 | 150 | 1 | 150 | | | | | | | F-138 |
| 2SD 468 | " | " | 25 | 5 | 1A | 900 | 150 | 1 | 20 | 130 | 2 | 500 | | | | | | | F-251 |
| 2SD 469 | | | | | | | | | | | | | | | | | | | |
| 2SD 470 | SW | Si.Me | 1600 | 5 | 1A | 15W (Tc = 25°C) | 130 | 100 | 750 | 2 | 5 | 1A | | | | | | | F-288 |
| 2SD 471 | PA | Si.E | 30 | 5 | 1A | 800 | 150 | 0.1 | 100 | | | | | | | 130* | 22 | | F-278 |
| 2SD 472 | | | | | | | | | | | | | | | | | | | |
| 2SD 473 | | | | | | | | | | | | | | | | | | | |
| 2SD 474 | | | | | | | | | | | | | | | | | | | |
| 2SD 475 | PA | Si.T | 50 | 4 | 4A | 40W (Tc = 25°C) | 150 | 100 | 20 | 100 | 4 | 1A | | | | | | | F-267 |

**Pin Configurations are 1. Emitter, 2. Base, 3. Collector, 4. Shield, unless otherwise specified. (Outline Dimensions: mm)**

| TYPE NO. | USES | MATERIAL STRUCTURE | $V_{CBO}$ (V) | $V_{EBO}$ (V) | $I_C$ (mA) | $P_d$ (mW) | $T_j$ (°C) | $I_{CBO}$ (uA) | VALUE OF DC/PULSE | | | | BIAS | | hfe hfb* | fab fT (Mc) | Cob (pF) | $r_{bb'}$ $h_{ie(real)}$* (Ω) | CASE STYLE |
|---|---|---|---|---|---|---|---|---|---|---|---|---|---|---|---|---|---|---|---|
| | | | | | | | | | $V_{CB}$(V) | hFE | $V_{CE}$(V) | $I_C$(mA) | $V_{CB}$(V) | $I_e$(mA) | | | | | |
| 2SD 476 | | | | | | | | | | | | | | | | | | | |
| 2SD 477 | | | | | | | | | | | | | | | | | | | |
| 2SD 478 | | | | | | | | | | | | | | | | | | | |
| 2SD 479 | PA | Si.E | 40 | 5 | 4A | 40W ($T_C$ = 25°C) | 150 | 500 | 40 | 6000 | 3 | 2A | | | | | | | F-252 |
| 2SD 480 | " | " | 60 | 5 | 4A | 40W ($T_C$ = 25°C) | 150 | 500 | 60 | 6000 | 3 | 2A | | | | | | | F-252 |
| 2SD 481 | " | " | 80 | 5 | 4A | 40W ($T_C$ = 25°C) | 150 | 500 | 80 | 6000 | 3 | 2A | | | | | | | F-252 |
| 2SD 482 | " | Si.TP | 275 | 6 | 500 | 20W ($T_C$ = 25°C) | 150 | 10 | 275 | 80 | 10 | 100 | | | | | | | F-252 |
| 2SD483 | " | " | 325 | 6 | 500 | 20W ($T_C$ = 25°C) | 150 | 10 | 325 | 80 | 10 | 100 | | | | | | | F-252 |
| 2SD 484 | " | " | 375 | 6 | 500 | 20W ($T_C$ = 25°C) | 150 | 10 | 375 | 80 | 10 | 100 | | | | | | | F-252 |
| 2SD 485 | " | Si.E | 40 | 5 | 4A | 40W ($T_C$ = 25°C) | 150 | 100 | 40 | 50 | 2 | 1.5A | | | | | | | F-252 |
| 2SD 486 | " | " | 60 | 5 | 4A | 40W ($T_C$ = 25°C) | 150 | 100 | 60 | 50 | 2 | 1.5A | | | | | | | F-252 |
| 2SD 487 | " | " | 80 | 5 | 4A | 40W ($T_C$ = 25°C) | 150 | 100 | 80 | 50 | 2 | 1.5A | | | | | | | F-252 |
| 2SD 488 | " | " | 40 | 5 | 3A | 30W ($T_C$ = 25°C) | 150 | 100 | 40 | 50 | 1 | 500 | | | | | | | F-252 |
| 2SD 489 | " | " | 60 | 5 | 3A | 30W ($T_C$ = 25°C) | 150 | 100 | 60 | 50 | 1 | 500 | | | | | | | F-252 |
| 2SD 490 | " | " | 80 | 5 | 3A | 30W ($T_C$ = 25°C) | 150 | 100 | 80 | 50 | 1 | 500 | | | | | | | F-252 |
| 2SD 491 | " | " | 70 | 5 | 10A | 90W ($T_C$ = 25°C) | 150 | 1mA | 70 | 40 | 4 | 4A | | | | | | | F-253 |
| 2SD 492 | " | " | 100 | 7 | 15A | 115W ($T_C$ = 25°C) | 200 | 1mA | 100 | 40 | 4 | 4A | | | | | | | F-102 |
| 2SD 493 | " | " | 60 | 5 | 5A | 75W ($T_C$ = 25°C) | 150 | 100 | 60 | 40 | 2 | 2.5A | | | | | | | F-253 |
| 2SD 494 | " | " | 80 | 5 | 5A | 75W ($T_C$ = 25°C) | 150 | 100 | 80 | 40 | 2 | 2.5A | | | | | | | F-253 |
| 2SD 495 | " | " | 100 | 5 | 5A | 75W ($T_C$ = 25°C) | 150 | 100 | 100 | 40 | 2 | 2.5A | | | | | | | F-253 |
| 2SD 496 | " | " | 60 | 5 | 8A | 75W ($T_C$ = 25°C) | 150 | 500 | 60 | 3000 | 4 | 4A | | | | | | | F-253 |
| 2SD 497 | " | " | 80 | 5 | 8A | 75W ($T_C$ = 25°C) | 150 | 500 | 80 | 3000 | 4 | 4A | | | | | | | F-253 |
| 2SD 498 | " | " | 100 | 5 | 8A | 75W ($T_C$ = 25°C) | 150 | 500 | 100 | 3000 | 4 | 4A | | | | | | | F-253 |
| 2SD 499 | " | " | 60 | 5 | 8A | 90W ($T_C$ = 25°C) | 150 | 100 | 60 | 60 | 2 | 4A | | | | | | | F-253 |
| 2SD 500 | " | " | 80 | 5 | 8A | 90W ($T_C$ = 25°C) | 150 | 100 | 80 | 60 | 2 | 4A | | | | | | | F-253 |
| 2SD 501 | " | " | 100 | 5 | 8A | 90W ($T_C$ = 25°C) | 150 | 100 | 100 | 60 | 2 | 4A | | | | | | | F-253 |
| 2SD 502 | " | " | 60 | 5 | 8A | 100W ($T_C$ = 25°C) | 200 | 500 | 60 | 3000 | 3 | 4A | | | | | | | F-102 |
| 2SD 503 | " | " | 80 | 5 | 8A | 100W ($T_C$ = 25°C) | 200 | 500 | 80 | 3000 | 3 | 4A | | | | | | | F-102 |
| 2SD 504 | " | " | 60 | 5 | 12A | 150W ($T_C$ = 25°C) | 200 | 500 | 60 | 3000 | 3 | 6A | | | | | | | F-102 |
| 2SD 505 | " | " | 80 | 5 | 12A | 150W ($T_C$ = 25°C) | 200 | 500 | 80 | 3000 | 3 | 6A | | | | | | | F-102 |
| 2SD 506 | PA | Si.E | 100 | 5 | 12A | 150W ($T_C$ = 25°C) | 200 | 500 | 100 | 3000 | 3 | 6A | | | | | | | F-102 |
| 2SD 507 | PA.SW | Si.DJ | 90 | 5 | 250A | 625W ($T_C$ = 25°C) | 150 | 2mA | 90 | 13 | 4 | 150A | | | | | | | F-286 |
| 2SD 508 | " | " | 110 | 5 | 250A | 625W ($T_C$ = 25°C) | 150 | 2mA | 110 | 13 | 4 | 150A | | | | | | | F-286 |
| 2SD 509 | " | " | 130 | 5 | 250A | 625W ($T_C$ = 25°C) | 150 | 2mA | 130 | 13 | 4 | 150A | | | | | | | F-286 |
| 2SD 510 | " | " | 150 | 5 | 250A | 625W ($T_C$ = 25°C) | 150 | 2mA | 150 | 13 | 4 | 150A | | | | | | | F-286 |
| 2SD 511 | " | " | 90 | 5 | 250A | 625W ($T_C$ = 25°C) | 150 | 2mA | 90 | 13 | 4 | 200A | | | | | | | F-286 |
| 2SD 512 | " | " | 110 | 5 | 250A | 625W ($T_C$ = 25°C) | 150 | 2mA | 110 | 13 | 4 | 200A | | | | | | | F-286 |
| 2SD 513 | " | " | 130 | 5 | 250A | 625W ($T_C$ = 25°C) | 150 | 2mA | 130 | 13 | 4 | 200A | | | | | | | F-286 |
| 2SD 514 | " | " | 90 | 5 | 250A | 625W ($T_C$ = 25°C) | 150 | 2mA | 90 | 15 | 4 | 250A | | | | | | | F-286 |
| 2SD 515 | " | " | 110 | 5 | 250A | 625W ($T_C$ = 25°C) | 150 | 2mA | 110 | 15 | 4 | 250A | | | | | | | F-286 |
| 2SD 516 | | | | | | | | | | | | | | | | | | | |
| 2SD 517 | SW | Si.Me | 1500 | 5 | 3A | 16W ($T_C$ = 25°C) | 130 | 100 | 750 | 6 | 5 | 2A | | | | | | | F-102 |
| 2SD 518 | " | Si.TP | 220 | 6 | 4A | 30W ($T_C$ = 25°C) | 175 | 100 | 150 | 20 | 5 | 3A | | | | | | | F-99 |
| 2SD 519 | " | Si.TMe | 600 | 6 | 10A | 100W ($T_C$ = 25°C) | 175 | 200 | 600 | 15 | 5 | 5A | | | | | | | F-102 |
| 2SD 520 | | | | | | | | | | | | | | | | | | | |
| 2SD 521 | | | | | | | | | | | | | | | | | | | |
| 2SD 522 | PA | Si.DJ | 100 | 10 | 10A | 100W ($T_C$ = 25°C) | 150 | 10mA | 100 | 40 | 5 | 5A | | | | | | | F-102 |
| 2SD 523 | " | Si.TMe | 60 | 5 | 7A | 50W ($T_C$ = 25°C) | 150 | 1mA | 60 | 7000 | 3 | 3A | | | | | | | F-102 |
| 2SD 524 | " | " | 80 | 5 | 10A | 75W ($T_C$ = 25°C) | 150 | 1mA | 80 | 8000 | 3 | 3A | | | | | | | F-102 |
| 2SD 525 | " | " | 100 | 5 | 5A | 40W ($T_C$ = 25°C) | 150 | 100 | 100 | 100 | 5 | 1A | 5 | —1A | | >3* | 100 | | F-268 |
| 2SD 526 | " | " | 80 | 5 | 4A | 30W ($T_C$ = 25°C) | 150 | 30 | 80 | 120 | 5 | 500 | 5 | —500 | | 10* | | | F-268 |
| 2SD 527 | | | | | | | | | | | | | | | | | | | |
| 2SD 528 | | | | | | | | | | | | | | | | | | | |
| 2SD 529 | | | | | | | | | | | | | | | | | | | |
| 2SD 530 | | | | | | | | | | | | | | | | | | | |
| 2SD 531 | PA | Si.T | 100 | 8 | 5A | 43W ($T_C$ = 25°C) | 120 | 2 | 50 | 100 | 2 | 100 | | | | | | | F-268 |
| 2SD 532 | | | | | | | | | | | | | | | | | | | |
| 2SD 533 | PA | Si.T | 270 | 15 | 10A | 100W ($T_C$ = 25°C) | 120 | 1mA | 240 | 100 | 2 | 1A | 5 | —100 | | 8* | 260 | | F-102 |
| 2SD 534 | | | | | | | | | | | | | | | | | | | |
| 2SD 535 | | | | | | | | | | | | | | | | | | | |

**Pin Configurations are 1. Emitter, 2. Base, 3. Collector, 4. Shield, unless otherwise specified. (Outline Dimensions: mm)**

| TYPE NO. | USES | MATERIAL STRUCTURE | $V_{CBO}$ (V) | $V_{EBO}$ (V) | $I_C$ (mA) | $P_d$ (mW) | $T_j$ (°C) | $I_{CBO}$ (uA) | VALUE OF DC/PULSE | | | | BIAS | | hfe hfb* | fab fT (Mc) | Cob (pF) | $r_{bb'}$ $h_{ie(real)}$* (Ω) | CASE STYLE |
|---|---|---|---|---|---|---|---|---|---|---|---|---|---|---|---|---|---|---|---|
| | | | | | | | | | $V_{CB}$(V) | hFE | $V_{CE}$(V) | $I_C$(mA) | $V_{CB}$(V) | $I_e$(mA) | | | | | |
| 2SD 536 | | | | | | | | | | | | | | | | | | | |
| 2SD 537 | | | | | | | | | | | | | | | | | | | |
| 2SD 538 | | | | | | | | | | | | | | | | | | | |
| 2SD 539 | | | | | | | | | | | | | | | | | | | |
| 2SD 540 | | | | | | | | | | | | | | | | | | | |
| 2SD 541 | | | | | | | | | | | | | | | | | | | |
| 2SD 542 | | | | | | | | | | | | | | | | | | | |
| 2SD 543 | | | | | | | | | | | | | | | | | | | |
| 2SD 544 | PA | 100 | 100 | 8 | 5A | 43W (Tc = 25°C) | 120 | 2 | 5 | 100 | 2 | 100 | | | | | | | F-267 |
| 2SD 545 | | | | | | | | | | | | | | | | | | | |
| 2SD 546 | | | | | | | | | | | | | | | | | | | |
| 2SD 547 | | | | | | | | | | | | | | | | | | | |
| 2SD 548 | | | | | | | | | | | | | | | | | | | |
| 2SD 549 | | | | | | | | | | | | | | | | | | | |
| 2SD 550 | | | | | | | | | | | | | | | | | | | |
| 2SD 551 | | | | | | | | | | | | | | | | | | | |
| 2SD 552 | PA | Si.TMe | 220 | 5 | 15A | 150W (Tc = 25°C) | 10mA | 220 | 50 | 5 | 5A | | | | | | | | F-102 |
| 2SD 553 | | | | | | | | | | | | | | | | | | | |
| 2SD 554 | | | | | | | | | | | | | | | | | | | |
| 2SD 555 | | | | | | | | | | | | | | | | | | | |
| 2SD 556 | | | | | | | | | | | | | | | | | | | |
| 2SD 557 | | | | | | | | | | | | | | | | | | | |
| 2SD 558 | | | | | | | | | | | | | | | | | | | |
| 2SD 559 | | | | | | | | | | | | | | | | | | | |
| 2SD 560 | | | | | | | | | | | | | | | | | | | |
| 2SD 561 | | | | | | | | | | | | | | | | | | | |
| 2SD 562 | | | | | | | | | | | | | | | | | | | |
| 2SD 563 | | | | | | | | | | | | | | | | | | | |
| 2SD 564 | | | | | | | | | | | | | | | | | | | |
| 2SD 565 | | | | | | | | | | | | | | | | | | | |
| 2SD 566 | | | | | | | | | | | | | | | | | | | |
| 2SD 567 | | | | | | | | | | | | | | | | | | | |
| 2SD 568 | | | | | | | | | | | | | | | | | | | |
| 2SD 569 | | | | | | | | | | | | | | | | | | | |
| 2SD 570 | PA | Si.TMe | 70 | 5 | 4A | 30W (Tc = 25°C) | 150 | 1mA | 70 | 120 | 5 | 500 | 5 | —500 | | 10* | | | F-268 |
| 2SD 571 | " | Si.E | 60 | 5 | 700 | 800 | 150 | 0.1 | 60 | 200 | 1 | 100 | | | | 110* | 13 | | F-278 |
| 2SD 572 | PA.SW | Si.T | 500 | 8 | 15A | 150W (Tc = 25°C) | 150 | 1mA | 500 | 150 | 5 | 15A | | | | | | | F-102 |
| 2SD 573 | " | " | 600 | 8 | 15A | 150W (Tc = 25°C) | 150 | 1mA | 600 | 150 | 5 | 15A | | | | | | | F-102 |
| 2SD 574 | " | Si.DJ | 120 | 4 | 30A | 400W (Tc = 25°C) | 150 | 5mA | 120 | 800 | 3 | 15A | | | | | | | F-266 |
| 2SD 575 | | | | | | | | | | | | | | | | | | | |
| 2SD 576 | SW | Si.EP | 250 | 5 | 500 | 800 | 175 | 0.5 | 200 | 70 | 10 | 10 | | | | | | | F-84C |
| 2SD 577 | " | Si.Me | 1500 | 5 | 3A | 16W (Tc = 25°C) | 115 | 100 | 750 | 7 | 10 | 3A | | | | | | | F-102 |
| 2SD 578 | | | | | | | | | | | | | | | | | | | |
| 2SD 579 | | | | | | | | | | | | | | | | | | | |
| 2SD 580 | PA | Si.DJ | 60 | 5 | 1A | 20W (Tc = 25°C) | 175 | 20 | 30 | 100 | 4 | 500 | 4 | —100 | | 1.2* | | | F-83 |
| 2SD 581 | | | | | | | | | | | | | | | | | | | |
| 2SD 582 | | | | | | | | | | | | | | | | | | | |
| 2SD 583 | | | | | | | | | | | | | | | | | | | |
| 2SD 584 | | | | | | | | | | | | | | | | | | | |
| 2SD 586 | | | | | | | | | | | | | | | | | | | |
| 2SD 586 | PA | Si.E | 100 | 5 | 5A | 60W (Tc = 25°C) | 150 | 10 | 80 | 80 | 5 | 1A | | | | | | | Fp295 |
| 2SD 587 | " | " | 120 | 5 | 6A | 70W (Tc = 25°C) | 150 | 50 | 100 | 80 | 5 | 1A | | | | | | | F-295 |
| 2SD 588 | " | Si.Tme | 150 | 5 | 7A | 80W (Tc = 25°C) | 150 | 50 | 80 | 5 | 1A | | | | | | | | F-295 |
| 2SD 289 | SW | Si.Me | 1500 | 5 | 5A | 50W (Tc = 25°C) | 130 | 100 | 750 | 7 | 10 | 5A | | | | | | | F-102 |
| 2SD 590 | " | Si.EP | 100 | 6 | 2A | 1W | 200 | 1 | 90 | 110 | 2 | 2A | | | | | | | F-84C |
| 2SD 591 | LN | " | 30 | 5 | 50 | 150 | 125 | 1 | 10 | 300 | 5 | 2 | 10 | —1 | | 150* | 2.2 | 70 | F-138 |
| 2SD 592 | AF | " | 30 | 5 | 1A | 600 | 135 | 0.001 | 20 | 160 | 10 | 500 | 5 | —1 | | 200* | 15 | | F-138 |
| 2SD 593 | PA | Si.TMe | 500 | 6 | 300 | 800 | 150 | 100 | 500 | 50 | 4 | 50 | | | | | | | F-84B |
| 2SD 594 | " | " | 800 | 6 | 300 | 800 | 150 | 100 | 800 | 50 | 4 | 50 | | | | | | | F-84B |
| 2SD 595 | | | | | | | | | | | | | | | | | | | |

**Pin Configurations are 1. Emitter, 2. Base, 3. Collector, 4. Shield, unless otherwise specified. (Outline Dimensions: mm)**

| TYPE NO. | USES | MATERIAL STRUCTURE | $V_{CBO}$ (V) | $V_{EBO}$ (V) | $I_C$ (mA) | Pd (mW) | Tj (°C) | $I_{CBO}$ (uA) | VALUE OF DC/PULSE | | | BIAS | | hfe hfb* | fab fT (Mc) | Cob (pF) | $r_{bb'}$ $h_{ie(real)}$* (Ω) | CASE STYLE |
|---|---|---|---|---|---|---|---|---|---|---|---|---|---|---|---|---|---|---|
| | | | | | | | | $V_{CB}$(V) | hFE | $V_{CE}$(V) | $I_C$(mA) | $V_{CB}$(V) | $I_E$(mA) | | | | | |
| 2SD 597 | PA | | 100 | 5 | 5A | 60W (Tc = 25°C) | 150 | 1mA | 60 | 40-200 | 5 | 1A | 10 | —500 | | 7* | | | F-102 |
| 2SD 598 | " | | 120 | 5 | 6A | 80W (Tc = 25°C) | 150 | 1mA | 70 | 40-200 | 5 | 1A | 10 | —500 | | 6* | | | F-102 |
| 2SD 599 | | Si.EP | 25 | 5 | 1A | 350 | 125 | 1 | 20 | 150 | 2 | 50 | 10 | —50 | | 180* | 15 | | F-138 |
| 2SD 600 | " | " | 100 | 5 | 1A | 8W (Tc = 25°C) | 150 | 1 | 50 | 150 | 5 | 50 | | | | | | | F-296 |
| ²SD 601 | | | | | | | | | | | | | | | | | | | |
| 2SD 602 | | | | | | | | | | | | | | | | | | | |
| 2SD 603 | AF | Si.EP | 30 | 5 | 100 | 250 | 125 | 1 | 10 | 360 | 10 | 2 | 5 | —2 | | 150* | 35 | | F-276 |
| 2SD 604 | | | | | | | | | | | | | | | | | | | |
| 2SD 605 | PA | Si | 600 | | 8A | 100W (Tc = 25°C) | | | | 100 | | | | | | | | | |
| 2SD 606 | " | " | 600 | | 15A | 150W (Tc = 25°C) | | | | 100 | | | | | | | | | |
| 2SD 607 | | | | | | | | | | | | | | | | | | | |
| 2SD 608 | PA | Si.E | 160 | 5 | 1.5A | 20W (Tc = 25°C) | 150 | 1 | 120 | 80 | 5 | 300 | | | | | | | F-268 |
| 2SD 609 | | | | | | | | | | | | | | | | | | | |
| 2SD 610 | PA | Si.TMe | 250 | 5 | 2A | 25W (Tc = 25°C) | 150 | 1 | 150 | 80 | 10 | 500 | | | | | | | F-268 |
| 2SD 611 | | | | | | | | | | | | | | | | | | | |
| 2SD 612 | PA | Si.EP | 25 | 5 | 2A | 10W (Tc = 25°C) | 150 | 1 | 20 | 150 | 2 | 500 | | | | | | | F-296 |
| 2SD 613 | | | | | | | | | | | | | | | | | | | |
| 2SD 614 | PA | Si.TMe | 100 | 6 | 3A | 800 | 150 | 100 | 100 | 800 | 4 | 3A | 5 | —100 | | 15* | | | F-84B |
| 2SD 615 | " | " | 140 | 6 | 3A | 800 | 150 | 100 | 140 | 800 | 4 | 3A | 5 | —100 | | 15* | | | F-84B |
| 2SD 616 | | | | | | | | | | | | | | | | | | | |
| 2SD 617 | | | | | | | | | | | | | | | | | | | |
| 2SD 618 | | | | | | | | | | | | | | | | | | | |
| 2SD 619 | | | | | | | | | | | | | | | | | | | |
| 2SD 620 | | | | | | | | | | | | | | | | | | | |
| 2SD 621 | | | | | | | | | | | | | | | | | | | |
| 2SD 622 | SW | Si.TMe | 450 | 5 | 3A | 30W (Tc = 25°C) | 175 | 10 | 150 | 20 | 5 | 1A | | | | | | | F-99 |
| 2SD 623 | | | | | | | | | | | | | | | | | | | |
| 2SD 624 | SW | Si.TMe | 200 | 5 | 500 | 800 | 175 | 5 | 150 | 180 | 5 | 200 | 5 | —50 | | 50* | 12.5 | | F-84C |
| 2SD 625 | | | | | | | | | | | | | | | | | | | |
| 2SD 626 | | | | | | | | | | | | | | | | | | | |
| 2SD 627 | | | | | | | | | | | | | | | | | | | |
| 2SD 628 | | | | | | | | | | | | | | | | | | | |
| 2SD 629 | | | | | | | | | | | | | | | | | | | |
| 2SD 630 | PA | Si.DJ | 50 | 5 | 30A | 200W (Tc = 25°C) | 175 | 100 | 30 | 30 | 5 | 15A | | | | | | | F-299 |
| 2SD 631 | " | " | 60 | 5 | 40A | 200W (Tc = 25°C) | 175 | 100 | 30 | 40 | 5 | 15A | | | | | | | F-299 |
| 2SD 632 | | | | | | | | | | | | | | | | | | | |
| 2SD 633 | | | | | | | | | | | | | | | | | | | |
| 2SD 634 | | | | | | | | | | | | | | | | | | | |
| 2SD 635 | | | | | | | | | | | | | | | | | | | |
| 2SD 636 | | | | | | | | | | | | | | | | | | | |
| 2SD 637 | | | | | | | | | | | | | | | | | | | |
| 2SD 638 | | | | | | | | | | | | | | | | | | | |
| 2SD 639 | | | | | | | | | | | | | | | | | | | |
| 2SD 640 | | | | | | | | | | | | | | | | | | | |
| 2SD 641 | | | | | | | | | | | | | | | | | | | |
| 2SD 642 | | | | | | | | | | | | | | | | | | | |
| 2SD 643 | " | " | 300 | 5 | 30A | 300W (Tc = 25°C) | 150 | 600 | 300 | 400 | 5 | 30A | | | | | | | F-266 |
| 2SD 644 | " | " | 600 | 5 | 30A | 300W (Tc = 25°C) | 150 | 1mA | 600 | 600 | 5 | 30A | | | | | | | F-266 |
| 2SD 645 | | | | | | | | | | | | | | | | | | | |
| 2SD 646 | | | | | | | | | | | | | | | | | | | |
| 2SD 647 | | | | | | | | | | | | | | | | | | | |
| 2SD 648 | | | | | | | | | | | | | | | | | | | |
| 2SD 649 | | | | | | | | | | | | | | | | | | | |
| 2SD 650 | | | | | | | | | | | | | | | | | | | |
| 2SD 651 | | | | | | | | | | | | | | | | | | | |
| 2SD 652 | | | | | | | | | | | | | | | | | | | |
| 2SD 653 | | | | | | | | | | | | | | | | | | | |
| 2SD 654 | | | | | | | | | | | | | | | | | | | |
| 2SD 655 | | | | | | | | | | | | | | | | | | | |
| 2SD 656 | | | | | | | | | | | | | | | | | | | |

**Pin Configurations are 1. Emitter, 2. Base, 3. Collector, 4. Shield, unless otherwise specified. (Outline Dimensions: mm)**

| TYPE NO. | USES | MATERIAL STRUCTURE | $V_{CBO}$ (V) | $V_{EBO}$ (V) | $I_C$ (mA) | $P_d$ (mW) | $T_j$ (°C) | $I_{CBO}$ (uA) | VALUE OF DC/PULSE $V_{CB}$(V) | $h_{FE}$ | $V_{CE}$(V) | $I_C$(mA) | BIAS $V_{CB}$(V) | $I_e$(mA) | $h_{fe}$ $h_{fb}$* | $f_{ab}$ $f_T$ (Mc) | $C_{ob}$ (pF) | $r_{bb'}$ $h_{ie(real)}$* (Ω) | CASE STYLE |
|---|---|---|---|---|---|---|---|---|---|---|---|---|---|---|---|---|---|---|---|
| 2SA 119 | RF.EP | Si.EP | −40 | | −300 | 175 | −0.1 | −10 | | | | −10 | 10 | 60 | 200* | 4.5 | 50* | | F-84B |
| 2SA 120 | " | " | −25 | −4 | −300 | 650 | 175 | −1 | −10 | | | | −10 | 10 | 60 | 200* | 4.5 | 50* | F-84B |
| 2SA 142A | RF | Ge.A | −40 | −1.5 | −15 | 80 | 85 | −5 | −12 | | | | −6 | 1 | 70 | 8 | 11 | 60 | F-12A |
| 2SA 217 | | " | −25 | −12 | −100 | 120 | 85 | −1 | −12 | 30-120 | −0.3 | −100 | | | | 14 | 20 | 200* | F-50C |
| 2SA 431A | RF | Ge.Me | −20 | | −5 | 70 | 85 | −10 | −12 | | | | −6 | 1 | −0.95* | | | | F-50C |
| 2SA 432A | " | " | −20 | −0.2 | −5 | 70 | 85 | −10 | −12 | | | | −6 | 1 | −0.95* | | | | F-50C |
| 2SA 440A | RF.Conv. | " | −20 | −0.4 | −5 | 60 | 85 | −30 | −2 | | | | −6 | 2 | 50 | 350* | 1.5 | 70* | F-48C |
| 2SA 549A | SW | Si.EP | −110 | −5 | −100 | 200 | 175 | −1 | −20 | 30-200 | −1 | −10 | | | | 100* | | | F-182C |
| 2SA 628A | RF.AF.SW. | " | −60 | −4 | −100 | 150 | 125 | −0.1 | −25 | 200 | −6 | −1 | −6 | 1 | | 100* | 3.5 | $C_{crbb'}$ 60pS | F-138B |
| 2SA 673A | RF | " | −50 | −4 | −500 | 400 | 125 | −0.5 | −20 | 130 | −3 | −10 | −6 | 1 | | 50* | 7 | 12* | F-170 |
| 2SA 699A | PA | " | −50 | −5 | −2A | 10W (Tc = 25°C) | 150 | −1 | −20 | 120 | −5 | −1A | −5 | 500 | | 150* | 50 | 3.3 | F-161 |
| 2SA 708A | RF | Si.E | −100 | −8 | −700 | 800 | 150 | −0.1 | −60 | 140 | −2 | −50 | −10 | 50 | | 50* | 25 | 25* | F-84B |
| 2SA 713A | " | Si.E | −40 | −10 | −300 | 250 | 125 | −0.1 | −20 | 30,000 | −5 | −100 | −10 | 10 | | 180* | 6 | 200* | F-138 |
| 2SA 728A | RF.AF | Si.EP | −60 | −5 | −100 | 100 | 125 | −0.1 | −25 | 200 | −6 | −10 | −5 | 1 | | 100* | 3.5 | $C_{crbb'}$ 60pS | F-175 |
| 2SA 774A | RF.LN | " | −55 | −5 | −50 | 150 | 175 | −0.1 | −10 | 540 | −5 | −2 | −5 | 2 | | 120* | 2 | 100 | F-54 |
| 2SA 776A | " | " | −55 | −5 | −50 | 200 | 150 | −0.1 | −30 | 300 | −6 | −2 | −6 | 1 | 285 | 180* | 3 | 35 | F-195 |
| 2SA 778A | RF | Si.T | −180 | −5 | −50 | 200 | 125 | −1 | −150 | 80 | −3 | −15 | −10 | 10 | | 60* | 4 | $C_{crbb'}$ 40pS | F-170 |
| 2SA 780A | | Si.P | −80 | −4 | −1A | 10W (Tc = 25°C) | 150 | −1 | −80 | 120 | −4 | −50 | −4 | 50 | | 120* | 8 | 50* | F-234 |
| | | | | | | | | | | | | | | | | | | | |
| 2SA 559A | SW | Si.EP | −40 | −5 | −200 | 350 | 175 | −0.5 | −10 | 50 | −1 | −10 | | | | | | | F-49C |
| 2SA 666A | RF.AF.LN | " | −45 | −5 | −50 | 150 | 125 | −1 | −10 | 250 | −5 | −2 | | | | | | | F-138 |
| 2SA 740A | RF.PA | Si.TMe | −150 | −5 | −1.5A | 25W (Tc = 25°C) | 150 | −10 | −100 | 75 | −10 | −500 | −10 | 500 | | 5* | 55 | 25 | F-268 |
| 2SA 753A | " | Si.E | −80 | −4 | −1A | 8W (Tc = 25°C) | 150 | −1mA | −80 | 120 | −4 | 30 | | 120* | 30 | 4* | | | F-160 |
| 2SA 745A | PA | Si.EMe | −120 | −6 | −8A | 70W (Tc = 25°C) | 150 | −1mA | −120 | 60 | −4 | −3A | −12 | 500 | | 15* | 220 | 10* | F-102 |
| 2SA 747A | " | " | −140 | −6 | −10A | 100W (Tc = 25°C) | 150 | −1mA | −140 | 60 | −4 | −3A | −12 | 500 | | 15* | 255 | 10* | F-102 |
| 2SA 775A | " | Si.T | −120 | −4 | −700 | 12.5W (Tc = 25°C) | 150 | −10 | −30 | 90 | −4 | −50 | −4 | 30 | | 30* | 35 | 25 | F-268 |
| 2SA 794A | " | Si.EP | −120 | −5 | −500 | 1.2W (Tc = 25°C) | 150 | | | 160 | −10 | −150 | −10 | 50 | | 120* | | | F-222 |
| 2SA 808A | " | Si.T | −100 | −6 | −6A | 50W (Tc = 25°C) | 150 | −1mA | −100 | 60 | −4 | −3A | −12 | 500 | | 10* | 90 | 8* | F-102 |
| 2SA 856A | RF.LN | Si.EP | −50 | −5 | −50 | 150 | 150 | −0.1 | −35 | 450 | −6 | −1 | −6 | 1 | | 140* | 4.5 | 40 | F-49C |
| 2SA 872A | " | " | −120 | −5 | −50 | 200 | 125 | −0.5 | −100 | 500 | −12 | −2 | −12 | 2 | | 120* | 1.8 | 12* | F-138 |
| 2SB 67A | AF | Ge.A | −60 | −30 | 150 | 350 | 70 | | | | | | | | 50-175 | | | | F-66 |
| 2SB 136A | PA | " | −60 | −12 | −300 | 150 | 85 | −10 | −25 | 120 | −1.5 | −50 | | | | | | | F-12B |
| 2SB 216A | " | " | −60 | −10 | −3A | 24W (Tc = 25°C) | 85 | −500 | −20 | 80 | −1.5 | −1A | | | | 0.5 | | | F-102 |
| 2SB 426A | " | " | −45 | −12 | −3A | 30W (Tc = 25°C) | 85 | −160 | −12 | 60 | −1.5 | −1A | | | | | | | F-102 |
| 2SB 452A | " | " | −45 | −6 | −1A | 300 | 85 | −30 | −12 | 150 | −1 | −150 | | | | | | | F-69 |
| 2SB 495A | " | " | −32 | −6 | −1A | 200 | 85 | −20 | −12 | 110 | −1 | −150 | | | | | | | F-12A |
| 2SB 512A | " | Si.EMe | −80 | −8 | −3A | 25W (Tc = 25°C) | 150 | −30 | −20 | 60 | −3 | −1A | | | | | | | F-178 |
| 2SB 513A | " | " | −80 | −8 | −3A | 25W (Tc = 25°C) | 150 | −30 | −20 | 60 | −3 | −1A | | | | | | | F-179 |
| | | | | | | | | | | | | | | | | | | | |
| 2SB 504A | PA.SW | Si.EP | −100 | −10 | −2A | 1W | 175 | −1 | −80 | 80 | −2 | −500 | | | | | | | F-84B |
| 2SB 506A | " | " | −150 | −7 | −5A | 60W (Tc = 25°C) | 175 | −2mA | −150 | 70 | −5 | −1A | | | | | | | F-102 |
| | | | | | | | | | | | | | | | | | | | |
| 2SB 57A | SW | Ge.A | −45 | −15 | −500 | 225 | 85 | −15 | −45 | 70 | −1 | −50 | −6 | −1 | 0.985* | 2 | | | F-84B |
| 2SB 126A | SW | Ge.A | −60 | −10 | −3.5A | 40W (Tc = 25°C) | 90 | −200 | −14 | 35 | −1 | −1A | | | | | | | F-102 |
| 2SB 127A | " | " | −60 | −10 | −3.5A | 40W (Tc = 25°C) | 90 | −200 | −14 | 75 | −1 | −1A | | | | | | | F-102 |
| 2SB 207A | PA | Ge.A | −140 | −20 | −20A | 80 | 85 | −5mA | −140 | 40 | −1.5 | −15A | −6 | −2 | | | | | F-105 |
| 2SB 208A | " | " | −140 | −20 | −30A | 80 | 85 | −5mA | −140 | 100 | −1.5 | −15A | −6 | −2 | | $f_{ae}$ 2.5kc | | | F-105 |
| 2SB 213A | SW | " | −140 | −40 | −20A | 80 | 85 | −5mA | −140 | 40 | −1.5 | −15A | −6 | −2 | | $f_{ae}$ 2.5kc | | | F-105 |
| 2SB 214A | " | " | −140 | −40 | −30A | 80 | 85 | −5mA | −140 | 100 | −1.5 | −15A | −6 | −2 | | $f_{ae}$ 2.5kc | | | F-105 |
| 2SB 539A | PA | Si.TMe | −130 | −6 | −10A | 100W (Tc = 25°C) | 150 | −100 | −120 | 80 | −5 | −2A | | | | | | | F-102 |
| 2SB 539B | " | " | −140 | −6 | −10A | 100W (Tc = 25°C) | 150 | −100 | −120 | 80 | −5 | −2A | | | | | | | F-102 |
| 2SB 539C | " | " | −160 | −6 | −10A | 100W (Tc = 25°C) | 150 | −100 | −120 | 80 | −5 | −2A | | | | | | | F-102 |
| 2SB 617A | " | " | −120 | −5 | −6A | 70W (Tc = 25°C) | 150 | −50 | −120 | 80 | −5 | −1A | | | | | | | F-295 |
| 2SB 618A | " | " | −150 | −5 | −7A | 80W (Tc = 25°C) | 150 | −50 | −130 | 80 | −5 | −1A | | | | | | | F-295 |
| | | | | | | | | | | | | | | | | | | | |
| | | | | | | | | | | | | | | | | | | | |
| | | | | | | | | | | | | | | | | | | | |
| | | | | | | | | | | | | | | | | | | | |
| | | | | | | | | | | | | | | | | | | | |
| | | | | | | | | | | | | | | | | | | | |

**Pin Configurations are 1. Emitter, 2. Base, 3. Collector, 4. Shield, unless otherwise specified. (Outline Dimensions: mm)**

| TYPE NO. | USES | MATERIAL STRUCTURE | $V_{CBO}$ (V) | $V_{EBO}$ (V) | $I_C$ (mA) | $P_d$ (mW) | $T_j$ (°C) | $I_{CBO}$ (uA) | VALUE OF DC/PULSE $V_{CB}$(V) | $h_{FE}$ | $V_{CE}$(V) | $I_C$(mA) | BIAS $V_{CB}$(V) | $I_e$(mA) | hfe hfb* | fab fT (Mc) | Cob (pF) | $r_{bb'}$ $h_{ie(real)}$* (Ω) | CASE STYLE |
|---|---|---|---|---|---|---|---|---|---|---|---|---|---|---|---|---|---|---|---|
| 2SC 89 | SW | Ge.A | 25 | 20 | 400 | 120 | 85 | 8 | 12 | 20-100 | 0.2 | 20 | | | | | | | F-73A |
| 2SC 90 | " | " | 25 | 20 | 400 | 120 | 85 | 8 | 12 | 20-120 | 0.3 | 200 | | | | | | | 73A |
| 2SC 91 | " | " | 25 | 20 | 400 | 120 | 85 | 8 | 12 | 30-200 | 0.3 | 200 | | | | | | | F-73A |
| 2SC 97A | RF.SW | Si.EP | 80 | 5 | 1A | 800 | 175 | 0.5 | 45 | 80 | 10 | 50 | 10 | −50 | | 350* | 6 | 30 | F-84C |
| 2SC 101A | RF | Si.TMe | 70 | 5 | 5A | 30W (Tc = 25°C) | 150 | 1mA | 50 | | | | 10 | −0.5A | 30 | 20* | 150 | 15 | F-101 |
| 2SC 108A | RF.SW | Si.E | 90 | 5 | 800 | 800 | 175 | 0.5 | 80 | 40-140 | 2 | 200 | 10 | −10 | | 150* | 15 | 55 | F-84B |
| 2SC 109A | " | " | 70 | 5 | 800 | 800 | 175 | 0.5 | 60 | 40-240 | 2 | 200 | 10 | −10 | | 150* | 15 | 55 | F-84B |
| 2SC 154B | RF | Si.TPa | 150 | 5 | 100 | 750 | 175 | 10 | 180 | 50 | 10 | 10 | 10 | −10 | 60 | 220* | 2.5 | 70* | F-84C |
| 2SC 154C | " | " | 200 | 6 | 100 | 750 | 175 | 0.1 | 100 | 90 | 10 | 25 | 10 | −10 | 60 | 150* | 2.5 | 15* | F-84C |
| 2SC 168 | RF.SW | Si.EP | 20 | 5 | 200 | 250 | 175 | 0.1 | 15 | 85 | 1 | 10 | 10 | −10 | 110 | 400* | 4 | 70* | F-49C |
| 2SC 169 | " | " | 40 | 5 | 200 | 250 | 175 | 0.1 | 15 | 85 | 1 | 10 | 10 | −10 | 110 | 450* | 4 | 70* | F-49C |
| 2SC 183A | RF.V | " | 30 | 5 | 30 | 30 | 100 | 150 | 0.1 | 25 | 75 | 3 | 0.5 | 6 | −1 | 80 | 1.8 | 45 | F-23 |
| 2SC 193A | PA | " | 50 | 5 | 500 | 800 | 175 | 1 | 10 | | | | 10 | −20 | 40 | 350* | 6 | 50* | F-85B |
| 2SC 219 | RF | Si.P | 20 | 5 | 25 | 200 | 175 | 0.02 | 12 | | | | 60 | | 60 | 600* | 1.3 | | F-50C |
| 2SC 268A | RF.PA.SW | " | 80 | 5 | 30 | 150 | 150 | 3 | 50 | | | | 6 | −1 | 55 | 150* | 1.6 | 50 | F-23 |
| 2SC 268B | RF.SW | Si.EP | 150 | 5 | 30 | 150 | 150 | 0.1 | 100 | 120 | 1 | 1 | 6 | −1 | | 75* | 2.8 | 25* | F-139 |
| 2SD 287A | RF.Conv. Mix.Osc | Si.P | 35 | 4 | 20 | 150 | 150 | 0.2 | 15 | | | | 10 | −5 | 80 | 1100* | 0.7 | $C_{rbb'}$ 10pS | F-23 |
| 2SC 288A | " | Si.Ep | 35 | 2 | 20 | 150 | 150 | 1 | 15 | | | | 10 | −5 | 80 | 1100* | 0.7 | $C_{rbb'}$ 10pS | F-23 |
| 2SC 317A | SW | Si.EMe | 100 | 5 | 100 | 350 | 175 | 0.1 | 20 | 100 | 6 | 10 | 6 | −10 | | 180* | 4.5 | 75 | F-12A |
| 2SC 318A | RF.SW | Si.PaMe | 50 | 5 | 100 | 300 | 175 | 0.2 | 25 | 90 | 3 | 1 | 6 | −2 | | | 3 | $C_{rbb'}$ 80pS | F-49C |
| 2SC 352A | " | " | 50 | 5 | 100 | 750 | 175 | 0.2 | 25 | 70 | 3 | 1 | 6 | −2 | | 140* | 3 | $C_{rbb'}$ 80pS | F-84B |
| 2SC 353A | " | " | 100 | 5 | 100 | 750 | 175 | 0.2 | 25 | 70 | 3 | 1 | 6 | −2 | | 140* | 3 | $C_{rbb'}$ 80pS | F-84B |
| 2SC 380A | IF | Si.P | 35 | 4 | 30 | 200 | 125 | 0.5 | 18 | 40•240 | 12 | 2 | 10 | −1 | | 250* | 2 | 20 | F-33 |
| 2SC 385A | OSC | Si.EP | 30 | 3 | 20 | 200 | 125 | 0.5 | 15 | 20 | 3 | 8 | 10 | −8 | | >600* | <1.5 | <35 | F-33 |
| 2SC 386A | " | " | 20 | 3 | 20 | 200 | 125 | 0.5 | 15 | 40 | 3 | 8 | 10 | −8 | | | 1.2 | 18 | F-33 |
| 2SC 387A | RF.Conv. Mix.Osc | " | 30 | 3 | 50 | 200 | 125 | 0.5 | 15 | 20 | 3 | 8 | 10 | -8 | | 1200* | <1.5 | <25 | F-33 |
| 2SC 388A | OSC | " | 25 | 3 | 50 | 300 | 125 | 0.025 | 10 | 20-200 | 12.5 | 12.5 | 12.5 | | | >300* | 0.8-2.0 | <25 | F-33 |
| 2SC 395A | SW | " | 20 | 5 | 500 | 300 | 175 | 0.1 | 20 | 30-200 | 1 | 10 | 10 | −10 | | 400* | 4 | | F-49C |
| 2SC 402A | RF.Conv. Mix.Osc | Si.E | 50 | | 100 | 180 | 120 | 0.2 | 25 | 90 | 3 | 1 | 6 | −1 | 110 | 140* | 2.5 | | F-38 |
| 2SC 403A | " | " | 50 | | 100 | 180 | 120 | 0.2 | 25 | 60 | 3 | 1 | 6 | −1 | 75 | 140* | 2.2 | | F-38 |
| 2SC 410A | SW | Si.DB | 200 | 4 | 10A | 100W (Tc = 25°C) | 150 | 2mA | 200 | 37 | 5 | 5A | 10 | −2A | | $f_{ae}$ 0.4 | | | F-102 |
| 2SC 434A | " | " | 200 | 4 | 30A | 100W (Tc = 25°C) | 150 | 20mA | 200 | 28 | 5 | 10A | 10 | −2A | | $f_{ae}$ 0.4 | | | F-105 |
| 2SC 487A | PA | Si.P | 150 | 5 | 1.5A | 15W (Tc = 25°C) | 150 | 1mA | 30 | 100 | 2 | 200 | 10 | −50 | | 20* | 85 | 5 | F-99 |
| 2SC 642A | " | Si.TMe | 1500 | 5 | 1A | 50W (Tc = 25°C) | 150 | 10 | 500 | 30-160 | 15 | 150 | 15 | −200 | | >0.5 | 70 | 10 | F-102 |
| 2SC 643A | " | " | 1500 | 5 | 2.5A | 50W (Tc = 25°C) | 150 | 10 | 500 | 5 | 15 | 2A | 15 | −200 | | >2 | 80 | 10 | F-102 |
| 2SC 680A | " | Si.T | 200 | 6 | 2A | 12.5W (Tc = 25°C) | 150 | 1 | 30 | 180 | 10 | 200 | | | | | | | F-153 |
| 2SC 681A | " | " | 250 | 5 | 6A | 50W (Tc = 25°C) | 150 | 15mA | 30 | | | | | | | | | | F-102 |
| 2SC 685A | " | Si.TPa | 300 | 4 | 100 | 6.5W (Tc = 25°C) | 150 | | 60 | 10 | 50 | | | | | | | | F-153 |
| 2SC 711A | RF.AF | Si.EP | 50 | 4 | 100 | 200 | 125 | 0.1 | 25 | 250 | 6 | 1 | 6 | −1 | | 150* | 2.2 | $<C_{rbb'}$ 200pS | F-138B |
| 2SC 782A | PA | Si.TP | 300 | 5 | 1.5A | 25W (Tc = 25°C) | 150 | 30 | 300 | 150 | 10 | 100 | 10 | −100 | | 10* | 70 | 25 | F-99 |
| 2SC 914A | SW | Si.EP | 40 | 5 | 300 | 300 | 175 | 0.2 | 20 | 70 | 1 | 30 | $h_{FE}$ 14 (2V, 300mA) | | | | | | F-49C |
| 2SC 915A | " | " | 30 | 5 | 300 | 300 | 175 | 0.2 | 20 | 70 | 1 | 30 | $h_{FE}$ 15 (2V,200mA) | | | | | | F-49C |
| 2SC 926A | RF.AF.SW | Si.DB | 210 | 5 | 30 | 250 | 120 | 0.2 | 150 | 100 | 3 | 1 | 10 | −10 | | 160* | 2.5 | $C_{rbb'}$ 40pS | F-168 |
| 2SC 936A | PA | Si.TMe | 1000 | 5 | 1A | 22W (Tc = 25°C) | 150 | 10 | 500 | 45 | 10 | 100 | 15 | −200 | | 7* | 35 | 25 | F-102 |
| 2SC 985A | RF.LN | Si.EP | 20 | 3 | 40 | 300 | 200 | 0.1 | 10 | 100 | 10 | 15 | 10 | −15 | | 3700* | 0.6 | 20* | F-26 |
| 2SC 987A | " | " | 20 | 3 | 30 | 250 | 200 | 0.1 | 10 | 100 | 10 | 10 | 10 | −10 | | 4500* | 0.5 | 20* | F-26 |
| 2SC 988A | RF | " | 20 | 3 | 30 | 200 | 200 | 0.1 | 10 | 80 | 10 | 10 | 10 | −10 | | 3000* | 0.5 | 30* | F-50C |
| 2SC 988B | " | " | 20 | 3 | 30 | 200 | 200 | 0.1 | 10 | 80 | 10 | 10 | 10 | −10 | | 3000* | 0.5 | 30* | F-50C |
| 2SC 999A | RF.PA.SW | Si.TMe | 1500 | 5 | 2.5A | 50W (Tc = 25°C) | 150 | 10 | 500 | 30 | 125 | 200 | 15 | −200 | | 4 | 80 | 10 | F-102 |
| 2SC 1005A | PA | " | 1400 | 5 | 5A | 50W (Tc = 25°C) | 150 | 10 | 500 | 12 | 15 | 4A | 15 | −500 | | 3* | 150 | 5 | F-102 |
| 2SC 1012A | RF.AF | Si.TP | 250 | 5 | 60 | 2.5W (Tc = 25°C) | 175 | 2 | 12 | 60 | 20 | 40 | 10 | −3 | 35 | 100* | 3.5 | $C_{rbb'}$ 60pS | F-84B |
| 2SC 1122A | PA | Si.EP | 35 | 4 | 4.5A | 30W (Tc = 25°C) | 175 | 50 | 15 | 40 | 5 | 1.5A | 10 | −200 | | 400* | 20 | 5* | F-135 |
| 2SC 1151A | RF.PA | Si.EMe | 1000 | 5 | 1A | 50W (Tc = 25°C) | 125 | 200 | 500 | 60 | 10 | 150 | 15 | −200 | | 5* | 65 | 25 | F-102 |
| 2SC 1153A | SW | " | 1400 | 6 | 2.5A | 50W (Tc = 25°C) | 125 | 1mA | 1400 | 20 | 10 | 2.5A | | | | | | | F-102 |
| 2SC 1172A | PA | Si.TMe | 1500 | 5 | 5A | 50W (Tc = 25°C) | 150 | 10 | 500 | 20 | 10 | 2A | 10 | −500 | | 5* | 80 | 10 | F-102 |
| 2SC 1212A | RF | Si.T | 90 | | 1A | 750 | 150 | 5 | 180 | 4 | 50 | | 4 | −30 | | 10* | 30 | 4* | F-160 |
| 2SC 1213A | " | Si.EP | 50 | 4 | 500 | 400 | 125 | 0.5 | 20 | 180 | 3 | 10 | 6 | −1 | | 50* | 5 | 9* | F-170 |
| 2SC 1226A | PA | " | 50 | 5 | 2A | 10W (Tc = 25°C) | 150 | 1 | 20 | 120 | 5 | 1A | 5 | −500 | | 150* | 50 | 3.3* | F-161 |
| 2SC 1280A | RF | Si.E | 40 | 10 | 300 | 250 | 125 | 0.1 | 20 | 30,000 | 5 | 100 | 10 | −10 | | 180* | 5 | 220* | F-138 |
| 2SC 1367A | PA | Si.TMe | 1000 | 5 | 1A | 50W (Tc = 25°C) | 125 | 10 | 500 | 45 | 10 | 200 | 15 | −200 | | 6* | 60 | 25 | F-102 |

**Pin Configurations are 1. Emitter, 2. Base, 3. Collector, 4. Shield, unless otherwise specified. (Outline Dimensions: mm)**

| TYPE NO. | USES | MATERIAL STRUCTURE | $V_{CBO}$ (V) | $V_{EBO}$ (V) | $I_C$ (mA) | Pd (mW) | $T_j$ (°C) | $I_{CBO}$ (uA) | VALUE OF DC/PULSE BIAS $V_{CB}$(V) | $h_{FE}$ | $V_{CE}$(V) | $I_C$(mA) | $V_{CB}$(V) | $I_E$(mA) | hfe hfb* | fab fT (Mc) | Cob (pF) | $r_{bb'}$ $h_{ie(real)}$* (Ω) | CASE STYLE |
|---|---|---|---|---|---|---|---|---|---|---|---|---|---|---|---|---|---|---|---|
| 2SC 1380A | RF.LN | Si.E | 55 | 5 | 100 | 200 | 150 | 0.1 | 18 | 200-700 | 6 | 2 | 6 | —1 | | 80* | 6 | 100 | F-49C |
| 2SC 1409A | PA | Si.TMe | 200 | 6 | 2A | 12.5W (Tc = 25°C) | 150 | 1 | 30 | 100 | 10 | 50 | 10 | —50 | | 20* | 95 | 20 | F-158 |
| 2SC 1410A | " | " | 200 | 6 | 2A | 12.5W (Tc = 25°C) | 150 | 1 | 30 | 100 | 10 | 50 | 10 | —50 | | 20* | 95 | 20 | F-159 |
| 2SC 1413A | " | Si.T | 150 | 6 | 5A | 50W (Tc = 25°C) | 150 | 10 | 500 | 10 | 10 | 3.5a | 15 | —200 | | 4* | 175 | 10 | F-102 |
| 2SC 1461A | RF | Si.EP | 55 | 5 | 50 | 200 | 150 | 0.1 | 30 | 350 | 6 | 2 | 6 | —1 | | 100* | 3 | 45 | F-195 |
| 2SC 1478A | RF.LN | " | 55 | 5 | 50 | 150 | 175 | 0.1 | 10 | 540 | 5 | 2 | 5 | —2 | | 150* | 2.2 | 70 | F-54 |
| 2SC 1577A | " | Si.T | 80 | 4 | 1A | 10W (Tc = 25°C) | 150 | 5 | 50 | 160 | 4 | 50 | 4 | —50 | | 10* | 30 | 50* | F-234 |
| | | | | | | | | | | | | | | | | | | | |
| 2SC 1103A | PA | Si.TP | 250 | 7 | 100 | 800* | 150 | 0.1 | 250 | 80 | 10 | 10 | 30 | —10 | | 80* | 4.3 | 30 | F-84B |
| 2SC 1116A | " | Si.T | 200 | 6 | 10A | 100W (Tc = 25°C) | 150 | 1mA | 200 | 60 | 4 | 3A | 12 | —500 | | 10* | 165 | 13* | F-102 |
| 2SC 1170B | " | Si.TMe | 1500 | 5 | 3.5A | 50W (Tc = 25°C) | 150 | 10 | 500 | 10 | 10 | 1A | 10 | —500 | | 4* | 80 | 10 | F-102 |
| 2SC 1172B | " | " | 1500 | 5 | 7A | 50W (Tc = 25°C) | 150 | 10 | 500 | 20 | 10 | 2A | 10 | —500 | | 4* | 100 | 10 | F-102 |
| 2SC 1178A | " | Si.EP | 40 | 4.5 | 5A | 35W (Tc = 25°C) | 175 | 2mA | 15 | 30 | 10 | 20 | | | | | | | F-113 |
| 2SC 1196A | " | " | 45 | 3.5 | 1A | 10W (Tc = 25°C) | 175 | 200 | 15 | 50 | 10 | 200 | 10 | —50 | | 1000* | < 10 | | F-135 |
| 2SC 1197A | " | " | 45 | 3.5 | 2A | 20W (Tc = 25°C) | 175 | 400 | 15 | 55 | 10 | 500 | 10 | —100 | | 1000* | <20 | | F-135 |
| 2SC 1206A | " | " | 45 | 4.5 | 1.7A | 25W (Tc = 25°C) | 175 | 1mA | 30 | 50 | 25 | 50 | | | | | | | F-209 |
| 2SC 1206B | " | " | 45 | 4.5 | 2A | 25W (Tc = 25°C) | 175 | 1mA | 40 | 50 | 25 | 50 | | | | | | | F-220 |
| 2SC 1241A | " | " | 35 | 3.5 | 2A | 20W (Tc = 25°C) | 175 | 500 | 15 | 50 | 5 | 1A | | | | | | | F-135 |
| 2SC 1242A | " | " | 35 | 3.5 | 4.5A | 20W (Tc = 25°C) | 175 | 100 | 15 | 40 | 5 | 1.5A | | | | | | | F-135 |
| 2SC 1403A | " | Si.T | 180 | 6 | 8A | 70W (Tc = 25°C) | 150 | 1mA | 180 | 60 | 4 | 3A | 12 | —500 | | 10* | 130 | 7* | F-102 |
| | | | | | | | | | | | | | | | | | | | |
| 2SC 403C | RF | Si.EP | 60 | 4 | 100 | 320 | 120 | 0.2 | 25 | 41-175 | 3 | 1 | 6 | —2 | | 140* | 2 | $C_{rbb'}$ 40pS | F-38 |
| 2SC 563A | " | " | 40 | 4 | 25 | 300 | 175 | 10 | 40 | 38 | 10 | 7 | 10 | —5 | | 550* | 0.23 | | F-117C |
| 2SC 631A | RF.LN | Si.PaMe | 25 | 6 | 200 | 320 | 120 | 0.2 | 25 | | 3 | 1 | | | | | 4.5 | $C_{rbb'}$ 300pS | F-38 |
| 2SC 632A | " | " | 50 | 6 | 200 | 320 | 120 | 0.2 | 25 | | 3 | 1 | | | | | 4.5 | $C_{rbb'}$ 300pS | F-38 |
| 2SC 633A | RF.Conv., Mix.Osc | " | 25 | 6 | 200 | 320 | 120 | 0.2 | 25 | | 3 | 1 | | | | | 4.5 | $C_{rbb'}$ 300pS | F-38 |
| 2SC 634A | " | " | 50 | 6 | 200 | 320 | 120 | 0.2 | 25 | | 3 | 1 | | | | | 4.5 | $C_{rbb'}$ 300pS | F-38 |
| 2SC 806A | PA | Si.TMe | 700 | 10 | 10 | 125W (Tc = 25°C) | 150 | 5mA | 500 | 40 | 3 | 2A | 10 | —500 | | 5.5* | 285 | | F-102 |
| 2SC 807A | " | " | 580 | 8 | 10 | 125W (Tc = 25°C) | 150 | 5mA | 500 | 60 | 3 | 0.1 | 10 | —500 | | 5.5* | 285 | | F-102 |
| 2SC 1008A | RF | Si.E | 100 | 8 | 700 | 800 | 150 | 0.1 | 60 | 140 | 2 | 50 | 10 | —50 | | 50* | 17 | 25* | F-84B |
| 2SC 1033A | RF.AF | Si.TP | 250 | 5 | 25 | 300 | 175 | 2 | 12 | 20 | 10 | 5 | | | | | | | F-49C |
| | | | | | | | | | | | | | | | | | | | |
| 2SC 1207A | PA | " | | | | | | | | | | | | | | | | | F-209 |
| 2SC 1207B | " | " | 45 | 4 | 4A | 50W (Tc = 25°C) | 175 | 2mA | 30 | | | | | | | | | | F-209 |
| 2SC 1208A | " | " | 35 | 5 | 10A | 50W (Tc = 25°C) | 175 | 2mA | 15 | | | | | | | | | | F-127 |
| 2SC 1212A | RF | " | 80 | 4 | 1A | 750 | 150 | 5 | 50 | 180 | 4 | 50 | 4 | —30 | | 160* | 30 | 4* | F-160 |
| 2SC 1325A | SW | Si.TMe | 1500 | 6 | 6A | 80W (Tc = 25°C) | 150 | 20 | 1000 | 19 | 15 | 1A | | | | | | | F-102 |
| | | | | | | | | | | | | | | | | | | | |
| 2SC 1358A | " | " | 1400 | 6 | 5.5A | 50W (Tc = 25°C) | 150 | 20 | 1000 | 19 | 15 | 500 | | | | | | | F-102 |
| 2SC 1448A | RF.PA | " | 150 | 5 | 1.5A | 25W (Tc = 25°C) | 150 | 20 | 100 | 70-140 | 10 | 500 | 10 | —500 | | 7* | 35 | 25 | F-119 |
| 2SC 1469A | SW | Si.T | 500 | 6 | 10A | 100W (Tc = 25°C) | 150 | 2mA | 500 | 12 | 5 | 5A | | | | | | | F-102 |
| 2SC 1471A | " | " | 500 | 6 | 30A | 200W (Tc = 25°C) | 155 | 2mA | 500 | 15 | 5 | 10A | | | | | | | F-266 |
| 2SC 1711A | LN | Si.EP | 20 | 3 | 30 | 200 | 175 | 0.5 | 10 | 80 | 8 | 10 | 8 | —10 | | 7.5GHz* | 0.25 | 30* | F-262 |
| 2SC 1605A | RF.PA | " | 35 | 4.5 | 3.5A | 35W (Tc = 25°C) | 175 | 500 | 25 | 10-180 | 10 | 0.1A | | | | | | | F-270 |
| | | | | | | | | | | | | | | | | | | | |
| 2SC 911A | PA | Si.EP | 40 | 4 | 500 | 1.7W | 175 | 10 | 15 | 50 | 10 | 100 | | | | | | | F-271 |
| 2SC 973A | " | " | 40 | 4 | 700 | 12W (Tc = 25°C) | 175 | 10 | 15 | 50 | 10 | 100 | | | | | | | F-279 |
| 2SC 975A | " | " | 40 | 5 | 1.5A | 20W (Tc = 25°C) | 175 | 100 | 15 | 50 | 10 | 100 | | | | | | | F-279 |
| 2SC 1553A | LN | " | 20 | 3 | 30 | 175 | 175 | 0.1 | 10 | 100 | 10 | 5 | 10 | —10 | | 4500* | 0.9 | 40 | F-50C |
| 2SC 1775A | RF | " | 120 | 5 | 50 | 200 | 125 | 0.5 | 100 | 700 | 12 | 2 | 12 | —2 | | 200* | 1.6 | $C_{rbb'}$ 12pS | F-138 |
| 2SC 1930A | " | " | 16 | 3 | 30 | 150 | 175 | 0.1 | 10 | 80 | 3 | 10 | 6 | —20 | | 8000* | 0.35 | 30 | F-284 |
| | | | | | | | | | | | | | | | | | | | |
| 2SC 403B | RF.AF | Si.PaMe | 50 | 4 | 100 | 320 | 120 | 0.2 | 25 | 41-175 | 3 | 1 | 6 | —2 | | | 2 | $C_{rbb'}$ 40pS | F-38 |
| 2SC 403C | " | " | 60 | 4 | 100 | 320 | 120 | 0.2 | 25 | 41-175 | 3 | 1 | 6 | —2 | | | 2 | $C_{rbb'}$ 40pS | Fp38 |
| 2SC 690A | PA | Si.EP | 60 | 5 | 4A | 35W (Tc = 25°C) | 175 | 500 | 30 | 50 | 10 | 100 | | | | | | | F-270 |
| 2SC 1567A | " | " | 120 | 5 | 500 | 1.2W | 150 | | | 160 | 10 | 150 | 10 | —150 | | 120* | | | F-222 |
| 2SC 1619A | " | Si.TMe | 120 | 6 | 6A | 50W (Tc = 25°C) | 175 | 1mA | 120 | 60 | 4 | 3A | 12 | —500 | | 10* | 85 | 12* | F-102 |
| 2SC 1664A | " | " | 100 | 6 | 6A | 40W (Tc = 25°C) | 150 | 10 | 100 | 500 | 4 | 1A | 10 | —500 | | 10* | | | F-99 |
| 2SC 1746A | RF.LN | Si.EP | 50 | 5 | 50 | 150 | 150 | 0.1 | 35 | 450 | 6 | 2 | 6 | —1 | | 140* | 2 | 60 | F-49C |
| 2SC 2122A | PA | Si.TMe | 1000 | 8 | 10A | 50W (Tc = 25°C) | 150 | 1mA | 800 | 25 | 10 | 2.5A | 10 | —100 | | 6* | 125 | 10 | F-102 |

**Pin Configurations are 1. Emitter, 2. Base, 3. Collector, 4. Shield, unless otherwise specified. (Outline Dimensions: mm)**

| TYPE NO. | USES | MATERIAL STRUCTURE | $V_{CBO}$ (V) | $V_{EBO}$ (V) | $I_C$ (mA) | $P_d$ (mW) | $T_j$ (°C) | $I_{CBO}$ (uA) | VALUE OF DC/PULSE | | | | BIAS | | hfe hfb* | fab fT (Mc) | Cob (pF) | $r_{bb'}$ $h_{ie(real)}$* (Ω) | CASE STYLE |
|---|---|---|---|---|---|---|---|---|---|---|---|---|---|---|---|---|---|---|---|
| | | | | | | | | | $V_{CB}$(V) | hFE | $V_{CE}$(V) | $I_C$(mA) | $V_{CB}$(V) | $I_e$(mA) | | | | | |
| 2SD 51A | PA | Si.Me | 150 | 6 | 5A | 50W (Tc = 25°C) | 150 | 100 | 50 | 60 | 3 | 2A | 10 | —500 | | 10* | | | F-102 |
| 2SD 88A | " | Si.TMe | 100 | 8 | 10A | 120W (Tc = 25°C) | 150 | 100 | 50 | 150 | 3 | 2A | | | | | | | F-102 |
| 2SD 170A | " | Ge.A | 32 | 12 | 500 | 200 | 85 | 20 | 12 | 150 | 1 | 150 | | | | | | | F-12A |
| 2SD 206A | PA.SW | Si.DJ | 50 | 8 | 10A | 150W (Tc = 25°C) | 150 | 1 | 30 | 20 | 5 | 5A | 10 | —1A | | $\frac{fae}{18kHz}$ | | | F-102 |
| 2SD 207A | " | " | 100 | 8 | 10A | 150W (Tc = 25°C) | 150 | 1 | 30 | 20 | 5 | 5A | 10 | —1A | | $\frac{fae}{18kHz}$ | | | F-102 |
| 2SD 208A | " | " | 150 | 8 | 10A | 150W (Tc = 25°C) | 150 | 1 | 30 | 20 | 5 | 5A | 10 | —1A | | $\frac{fae}{18kHz}$ | | | F-102 |
| 2SD 226A | PA | " | 60 | 8 | 3A | 25W (Tc = 25°C) | 150 | 30 | 20 | 50 | 3 | 1A | 10 | —200 | | $\frac{fae}{25kHz}$ | | | F-99 |
| 2SD 226B | " | " | 80 | 8 | 3A | 25W (Tc = 25°C) | 150 | 30 | 20 | 50 | 3 | 1A | 10 | —200 | | $\frac{fae}{25kHz}$ | | | F-99 |
| 2SD 232A | SW.AF | Si.TMe | 160 | 7 | 30A | 125W (Tc = 25°C) | 175 | 1mA | 50 | 25 | 4 | 10A | | | | | | | F-102 |
| 2SD 317A | PA | Si.T | 80 | 8 | 3A | 25W (Tc = 25°C) | 150 | 30 | 20 | 60 | 3 | 1A | 10 | —200 | | $\frac{fae}{25kHz}$ = | | | F-155 |
| 2SD 318A | " | " | 80 | 8 | 3A | 25W (Tc = 25°C) | 150 | 30 | 20 | 60 | 3 | 1A | 10 | —200 | | $\frac{fae}{25kHz}$ = | | | F-156 |
| 2SC 334A | " | Si.DJ | 130 | 7 | 6A | 75W (Tc = 25°C) | 150 | 1mA | 130 | 100 | 4 | 1A | | | | | | | F-102 |
| 2SC 363A | SW | Si.TMe | 350 | 6 | 30A | 200W (Tc = 25°C) | 175 | 100 | 300 | 30 | 5 | 15A | | | | | | | F-106 |
| 2SC 365A | PA | " | 80 | 5 | 3A | 25W (Tc = 25°C) | 150 | 30 | 20 | 70 | 3 | 1A | | | | $\frac{fae}{70kHz}$ | | | F-178 |
| 2SD 366A | " | " | 80 | 5 | 3A | 25W (Tc = 25°C) | 150 | 30 | 20 | 70 | 3 | 1A | | | | $\frac{fae}{70kHz}$ | | | F-179 |
| 2SD 373A | SW | " | 350 | 6 | 30A | 200W (Tc = 25°C) | 175 | 100 | 300 | 30 | 5 | 15A | | | | | | | F-106 |
| 2SD 389A | PA | Si.Dj | 80 | 8 | 3A | 25W (Tc = 25°C) | 150 | 30 | 20 | 70 | 3 | 1A | 10 | —200 | | $\frac{fae}{25kHz}$ | | | F-178 |
| 2SD 390A | " | " | 80 | 8 | 3A | 25W (Tc = 25°C) | 150 | 30 | 20 | 70 | 3 | 1A | 10 | —200 | | $\frac{fae}{25kHz}$ | | | F-179 |
| 2SD 287C | " | Si.TMe | 200 | 7 | 10A | 100W (Tc = 25°C) | 150 | 100 | 120 | 80 | 5 | 2A | | | | | | | F-102 |
| 2SD 78A | PA.SW | Si.EPa | 100 | 12 | 2A | 1W (Tc = 25°C) | 175 | 1 | 80 | 80 | 2 | 500 | 10 | —200 | | | | | F-84B |
| 2SD 181A | " | Si.TMe | 250 | 7 | 10A | 100W (Tc = 25°C) | 175 | 1mA | 200 | 60 | 5 | 5A | 10 | —200 | | | | | F-102 |
| 2SD 200A | SW | Si.Me | 1500 | 5 | 2.5A | 10W (Tc = 25°C) | 115 | 1mA | 1500 | 2.5 | 5 | 2A | | | | | | | F-102 |
| 2SD 287A | PA | Si.TMe | 200 | 7 | 10A | 100W (Tc = 25°C) | 150 | 100 | 120 | 80 | 5 | 2A | | | | | | | F-102 |
| 2SD 287B | " | " | 200 | 7 | 10A | 100W (Tc = 25°C) | 150 | 100 | 120 | 80 | 5 | 2A | | | | | | | F-102 |
| 2SD 376A | PA.SW | " | 300 | 7 | 10A | 100W (Tc = 25°C) | 175 | 100 | 300 | 50 | 5 | 2A | | | | | | | F-102 |
| 2SD 574A | " | Si.DJ | 120 | 4 | 30A | 400W (Tc = 25°C) | 150 | 1mA | 120 | 800 | 3 | 15A | | | | | | | F-266 |
| 2SD 538A | SW | Si.TMe | 500 | 7 | 10A | 150W (Tc = 25°C) | 175 | 100 | 150 | 25 | 5 | 5A | | | | | | | F-102 |
| 2SD 539A | " | " | 400 | 7 | 10A | 150W (Tc = 25°C) | 175 | 100 | 150 | 25 | 5 | 5A | | | | | | | F-102 |
| 2SD 587A | PA | Si.E | 120 | 5 | 6A | 70W (Tc = 25°C) | 150 | 50 | 120 | 80 | 5 | 1A | | | | | | | F-295 |
| 2SD 588A | " | Si.TMe | 150 | 5 | 7A | 80W (Tc = 25°C) | 150 | 50 | 130 | 80 | 5 | 1A | | | | | | | F-295 |
| 2SD 350A | PA | Si.Me | 1500 | 5 | 5A | 22W (Tc = 25°C) | 115 | 100 | 750 | 3 | 10 | 4A | | | | | | | F-102 |
| 2SD 380A | " | " | 1500 | 5 | 5A | 50W (Tc = 25°C) | 130 | 1mA | 1500 | 7.5 | 10 | 5A | | | | | | | F-102 |

Pin Configurations are 1. Emitter, 2. Base, 3. Collector, 4. Shield, unless otherwise specified. (Outline Dimensions: mm)

## FS-1

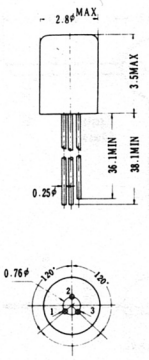


## FS-2

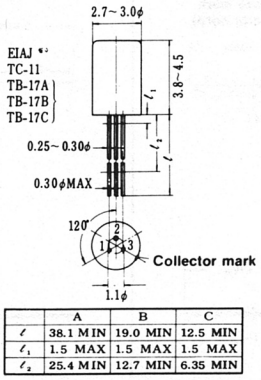


| | A | B | C |
|---|---|---|---|
| $\ell$ | 38.1 MIN | 19.0 MIN | 12.5 MIN |
| $\ell_1$ | 1.5 MAX | 1.5 MAX | 1.5 MAX |
| $\ell_2$ | 25.4 MIN | 12.7 MIN | 6.35 MIN |

## FS-3

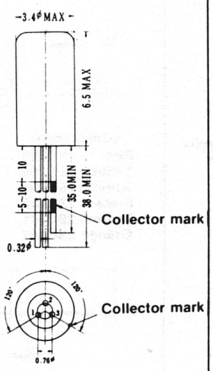


## FS-4

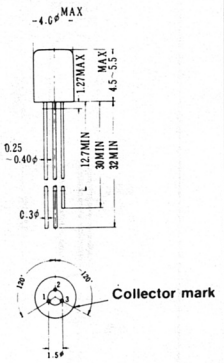


## FS-5

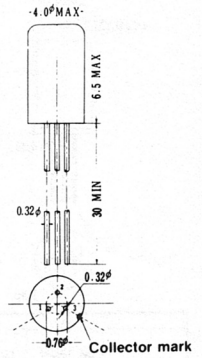


## FS-6

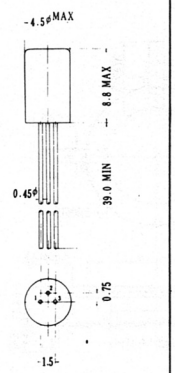


## FS-7




## FS-8

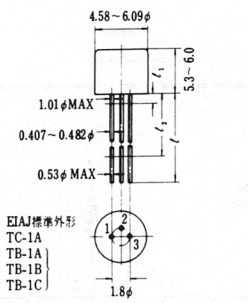


| | A | B | C |
|---|---|---|---|
| $\ell$ | 38.1 MIN | 19.0 MIN | 12.5 MIN |
| $\ell_1$ | 1.27MAX | 1.27MAX | 1.27MAX |
| $\ell_2$ | 25.4 MIN | 12.7 MIN | 6.35 MIN |

## FS-9

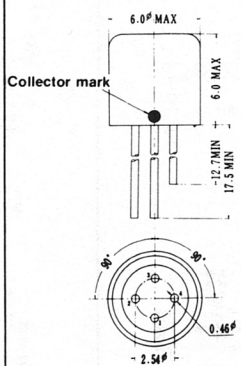


## FS-10

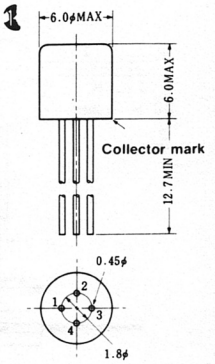


## FS-11

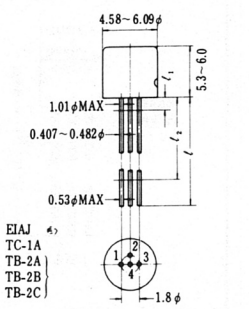


| | A | B | C |
|---|---|---|---|
| $\ell$ | 38.1 MIN | 19.0 MIN | 12.5 MIN |
| $\ell_1$ | 1.27MAX | 1.27MAX | 1.27MAX |
| $\ell_2$ | 25.4 MIN | 12.7 MIN | 6.35 MIN |

## FS-12

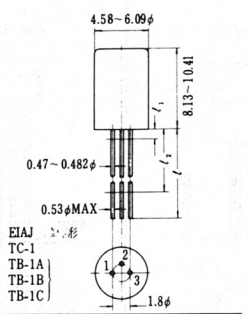


| | A | B | C |
|---|---|---|---|
| $\ell$ | 38.1 MIN | 19.0 MIN | 12.5 MIN |
| $\ell_1$ | 1.27MAX | 1.27MAX | 1.27MAX |
| $\ell_2$ | 25.4 MIN | 12.7 MIN | 6.35 MIN |

## FS-13

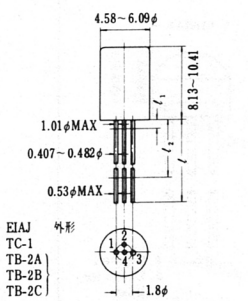


| | A | B | C |
|---|---|---|---|
| $\ell$ | 38.1 MIN | 19.0 MIN | 12.5 MIN |
| $\ell_1$ | 1.27MAX | 1.27MAX | 1.27MAX |
| $\ell_2$ | 25.4 MIN | 12.7 MIN | 6.35 MIN |

## FS-14

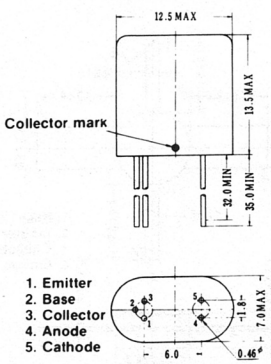


## FS-15

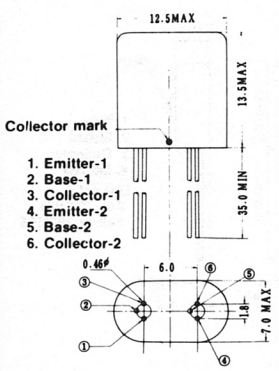


## FS-16

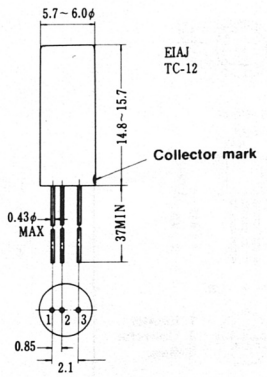


## FS-17

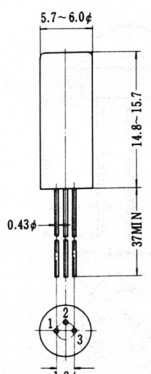


## FS-18

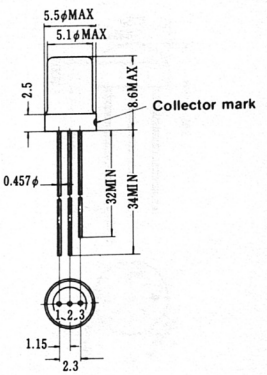

Pin Configurations are 1. Emitter, 2. Base, 3. Collector, 4. Shield, unless otherwise specified. (Outline Dimensions: mm)

## FS-19

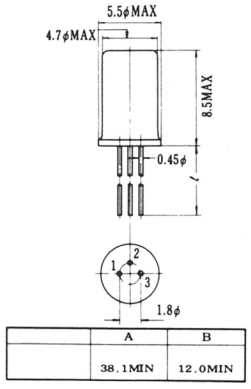


## FS-20

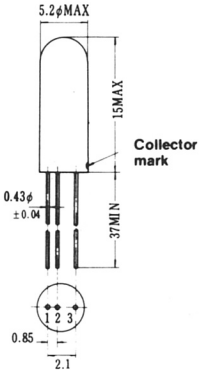


## FS-21

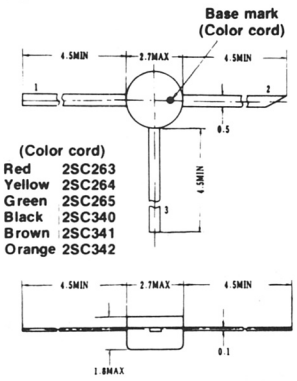


## FS-22

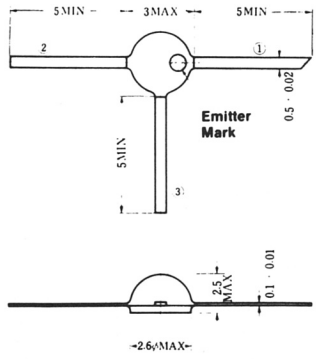


## FS-23

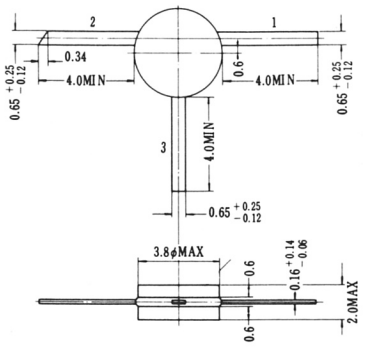


## FS-24

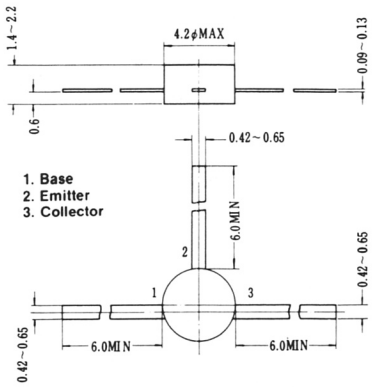


## FS-25

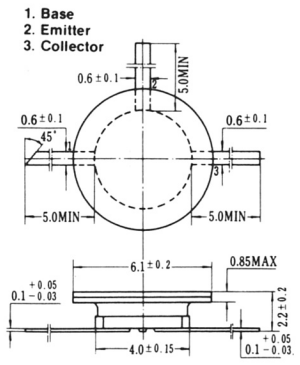


## FS-26

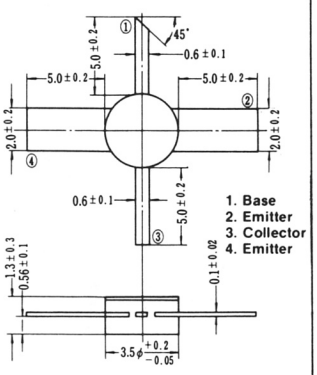


## FS-27

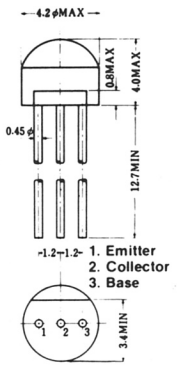


## FS-28

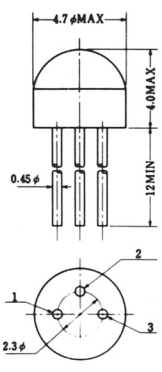


## FS-29

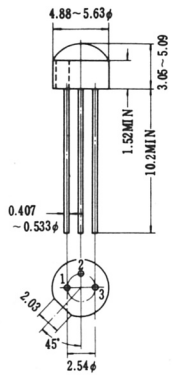


## FS-30

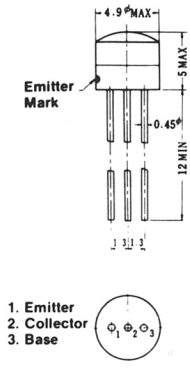


## FS-31

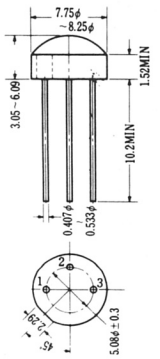


## FS-32

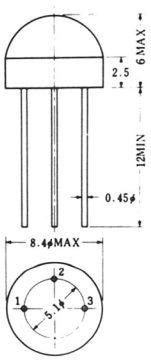


## FS-33

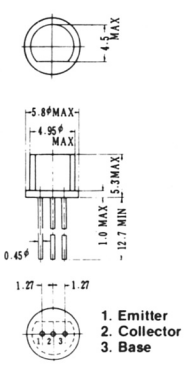


## FS-34

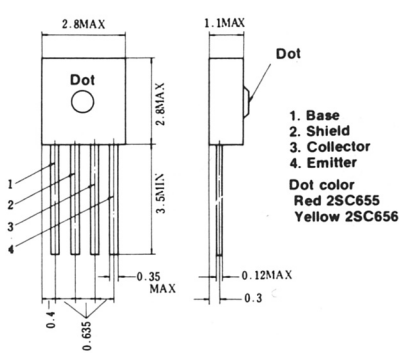

Pin Configurations are 1. Emitter, 2. Base, 3. Collector, 4. Shield, unless otherwise specified. (Outline Dimensions: mm)

## FS-35

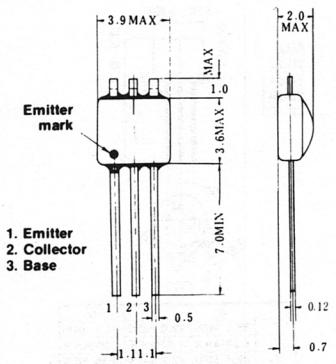


## FS-36

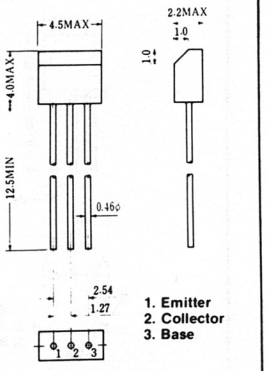


## FS-37

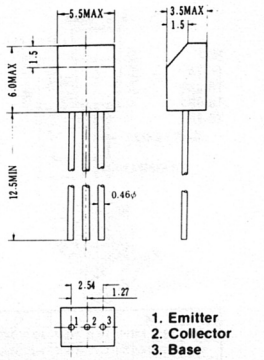


## FS-38

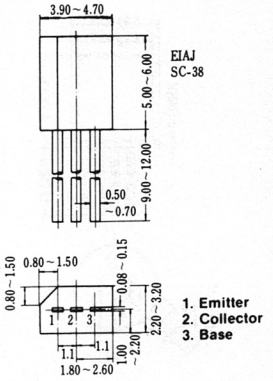


## FS-39

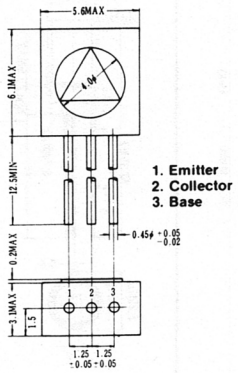


## FS-40

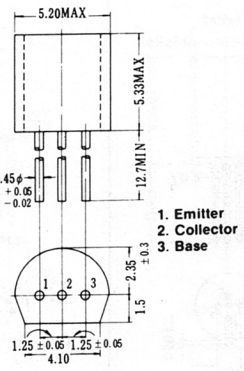


## FS-41

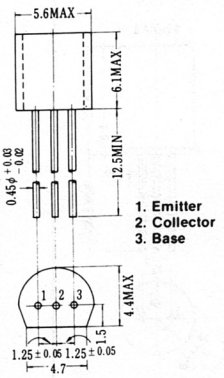


## FS-42

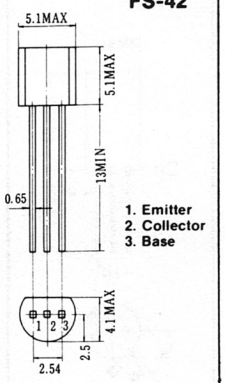


## FS-43

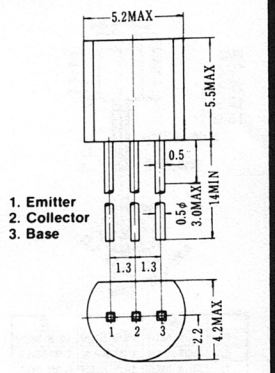


## FS-44

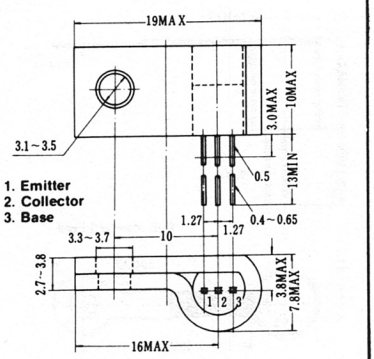


## FS-45

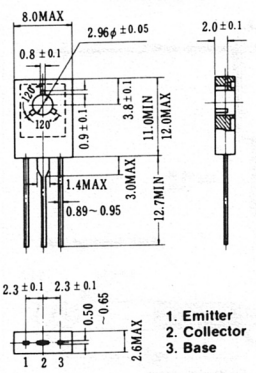


## FS-46

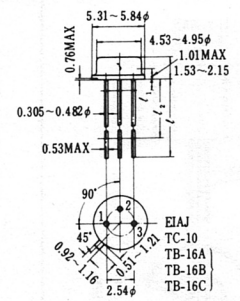


| | A | B | C |
|---|---|---|---|
| $\ell$ | 38.1 MIN | 19.0 MIN | 12.5 MIN |
| $\ell_1$ | 1.27MAX | 1.27MAX | 1.27MAX |
| $\ell_2$ | 25.4 MIN | 12.7 MIN | 6.35 MIN |

## FS-47

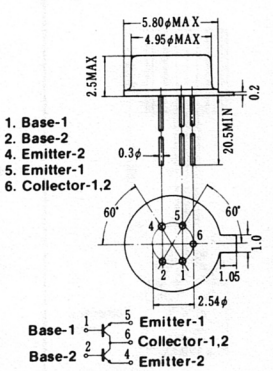


## FS-48

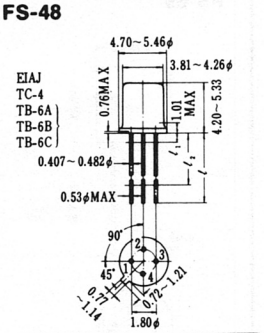


| | A | B | C |
|---|---|---|---|
| $\ell$ | 38.1 MIN | 19.0 MIN | 12.5 MIN |
| $\ell_1$ | 1.27MAX | 1.27MAX | 1.27MAX |
| $\ell_2$ | 25.4 MIN | 12.7 MIN | 6.35 MIN |

## FS-49

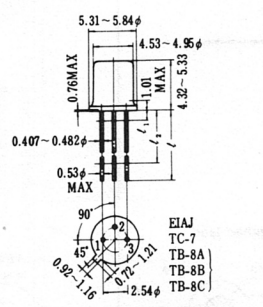


| | A | B | C |
|---|---|---|---|
| $\ell$ | 38.1 MIN | 19.0 MIN | 12.5 MIN |
| $\ell_1$ | 1.27MAX | 1.27MAX | 1.27MAX |
| $\ell_2$ | 25.4 MIN | 12.7 MIN | 6.35 MIN |

## FS-50

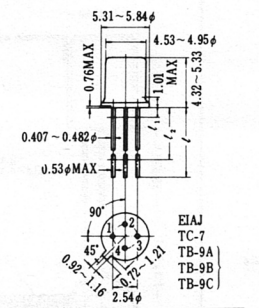


| | A | B | C |
|---|---|---|---|
| $\ell$ | 38.1 MIN | 19.0 MIN | 12.5 MIN |
| $\ell_1$ | 1.27MAX | 1.27MAX | 1.27MAX |
| $\ell_2$ | 25.4 MIN | 12.7 MIN | 6.35 MIN |

## FS-51

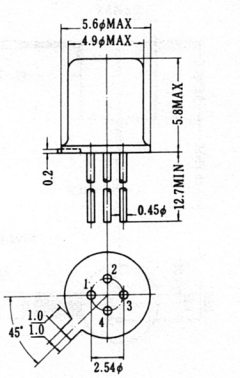

Pin Configurations are 1. Emitter, 2. Base, 3. Collector, 4. Shield, unless otherwise specified. (Outline Dimensions: mm)

## FS-52

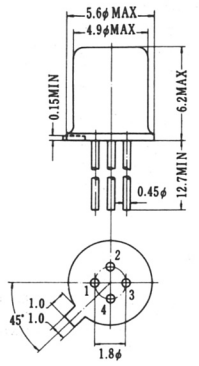


## FS-53

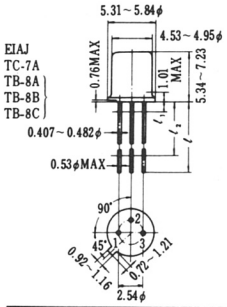


| | A | B | C |
|---|---|---|---|
| $\ell$ | 38.1 MIN | 19.0 MIN | 12.5 MIN |
| $\ell_1$ | 1.27MAX | 1.27MAX | 1.27MAX |
| $\ell_2$ | 25.4 MIN | 12.7 MIN | 6.35 MIN |

## FS-54

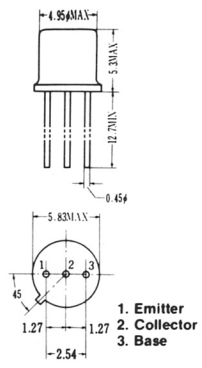


1. Emitter
2. Collector
3. Base

## FS-55

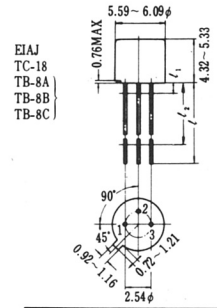


| | A | B | C |
|---|---|---|---|
| $\ell$ | 38.1 MIN | 19.0 MIN | 12.5 MIN |
| $\ell_1$ | 1.27MAX | 1.27MAX | 1.27MAX |
| $\ell_2$ | 25.4 MIN | 12.7 MIN | 6.35 MIN |

## FS-56

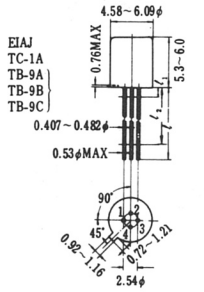


| | A | B | C |
|---|---|---|---|
| $\ell$ | 38.1 MIN | 19.0 MIN | 12.5 MIN |
| $\ell_1$ | 1.27MAX | 1.27MAX | 1.27MAX |
| $\ell_2$ | 25.4 MIN | 12.7 MIN | 6.35 MIN |

## FS-57

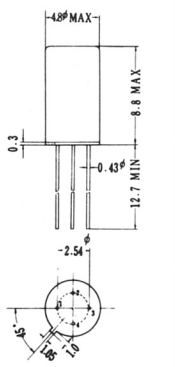


## FS-58

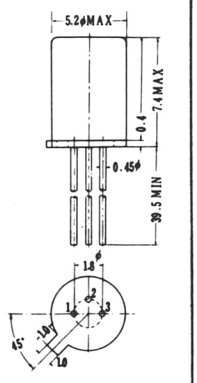


## FS-59

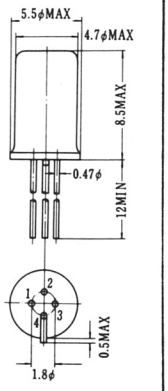


## FS-60

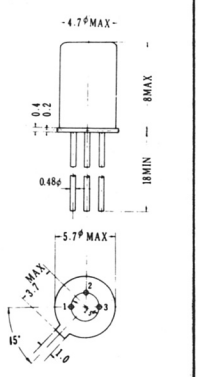


## FS-61

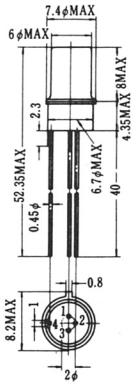


## FS-62

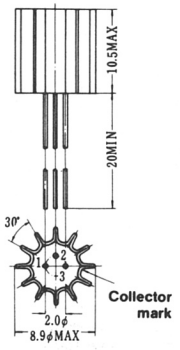


## FS-63

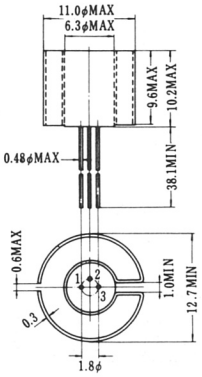


## FS-64

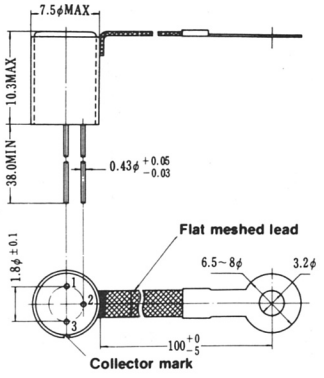


## FS-65

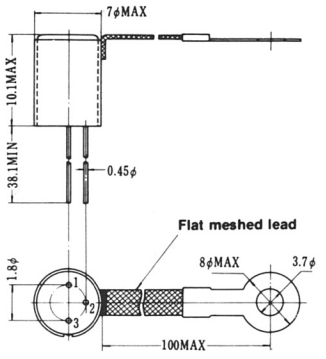


## FS-66

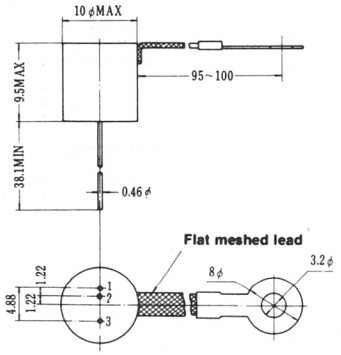


## FS-67

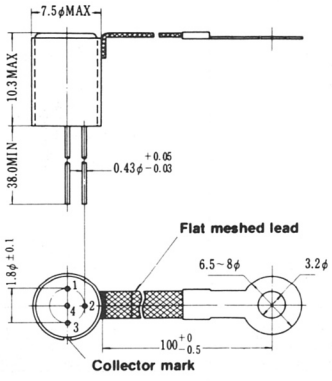


## FS-68

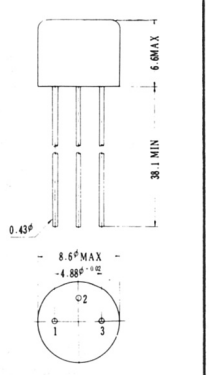


## FS-69

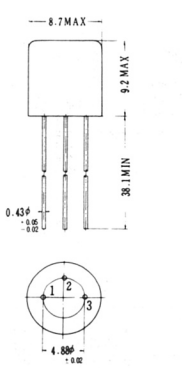

Pin Configurations are 1. Emitter, 2. Base, 3. Collector, 4. Shield, unless otherwise specified. (Outline Dimensions: mm)

## FS-70

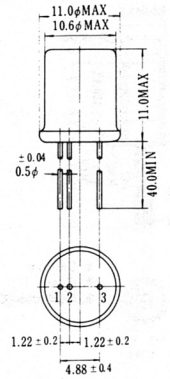


## FS-71

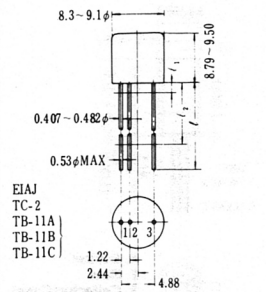


| | A | B | C |
|---|---|---|---|
| ℓ | 38.1 MIN | 19.0 MIN | 12.5 MIN |
| ℓ1 | 1.27MAX | 1.27MAX | 1.27MAX |
| ℓ2 | 25.4 MIN | 12.7 MIN | 6.35 MIN |

## FS-72

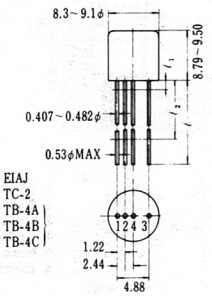


| | A | B | C |
|---|---|---|---|
| ℓ | 38.1 MIN | 19.0 MIN | 12.5 MIN |
| ℓ1 | 1.27MAX | 1.27MAX | 1.27MAX |
| ℓ2 | 25.4 MIN | 12.7 MIN | 6.35 MIN |

## FS-73

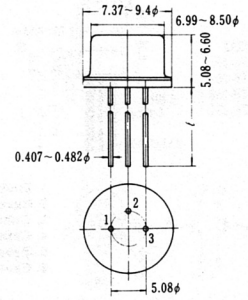


| A | B | C |
|---|---|---|
| 38.1MIN | 19.0MIN | 12.5MIN |

## FS-74

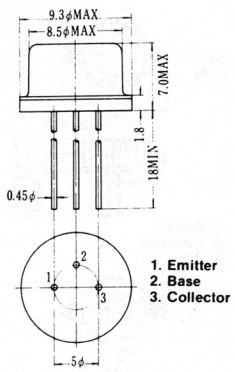


## FS-75

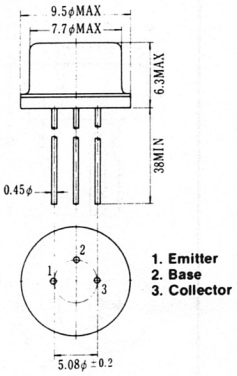


## FS-76

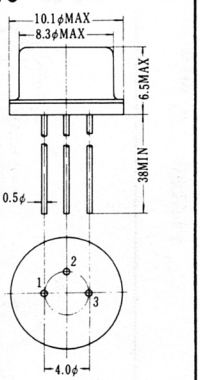


## FS-77

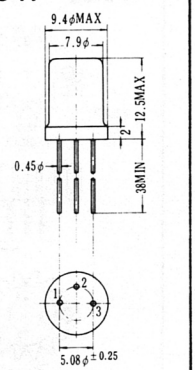


## FS-78

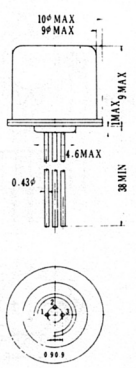


## FS-79

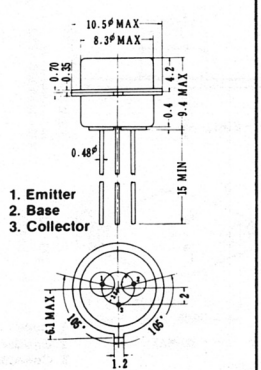


## FS-80

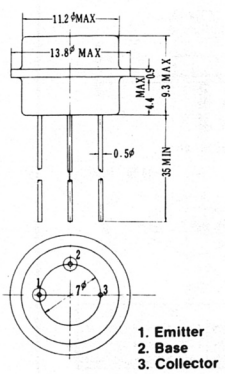


## FS-81

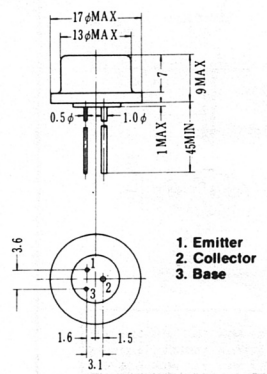


## FS-82

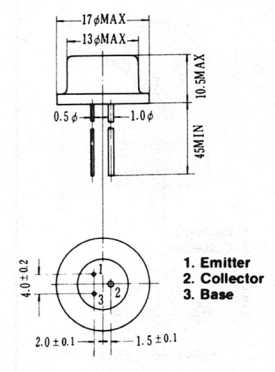


## FS-83

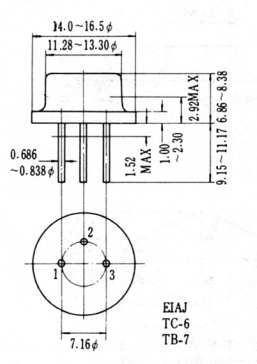


## FS-84

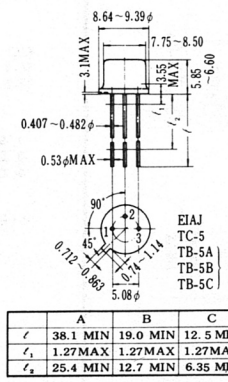


| | A | B | C |
|---|---|---|---|
| ℓ | 38.1 MIN | 19.0 MIN | 12.5 MIN |
| ℓ1 | 1.27MAX | 1.27MAX | 1.27MAX |
| ℓ2 | 25.4 MIN | 12.7 MIN | 6.35 MIN |

## FS-85

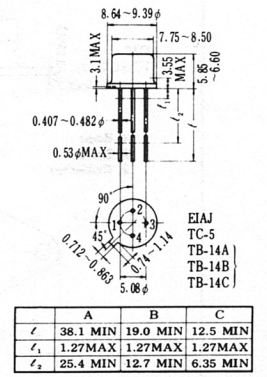


| | A | B | C |
|---|---|---|---|
| ℓ | 38.1 MIN | 19.0 MIN | 12.5 MIN |
| ℓ1 | 1.27MAX | 1.27MAX | 1.27MAX |
| ℓ2 | 25.4 MIN | 12.7 MIN | 6.35 MIN |

## FS-86

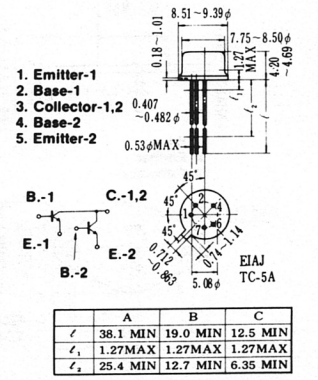


| | A | B | C |
|---|---|---|---|
| ℓ | 38.1 MIN | 19.0 MIN | 12.5 MIN |
| ℓ1 | 1.27MAX | 1.27MAX | 1.27MAX |
| ℓ2 | 25.4 MIN | 12.7 MIN | 6.35 MIN |

**Pin Configurations are 1. Emitter, 2. Base, 3. Collector, 4. Shield, unless otherwise specified. (Outline Dimensions: mm)**

## FS-87

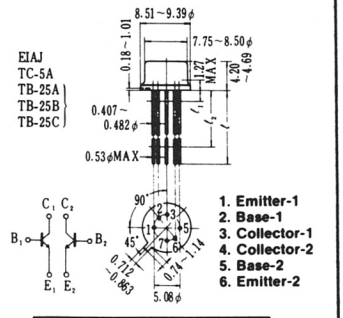


| | A | B | C |
|---|---|---|---|
| $\ell$ | 38.1 MIN | 19.0 MIN | 12.5 MIN |
| $\ell_1$ | 1.27MAX | 1.27MAX | 1.27MAX |
| $\ell_2$ | 25.4 MIN | 12.7 MIN | 6.35 MIN |

## FS-88

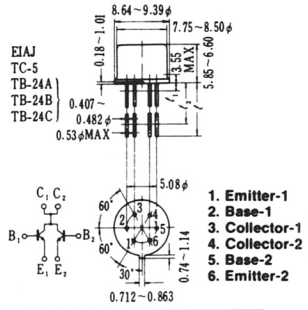


| | A | B | C |
|---|---|---|---|
| $\ell$ | 38.1 MIN | 19.0 MIN | 12.5 MIN |
| $\ell_1$ | 1.27MAX | 1.27MAX | 1.27MAX |
| $\ell_2$ | 25.4 MIN | 12.7 MIN | 6.35 MIN |

## FS-89

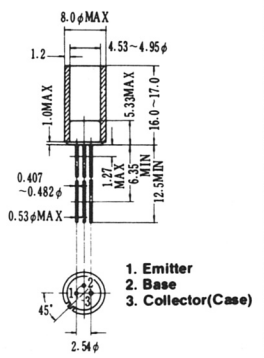


## FS-90

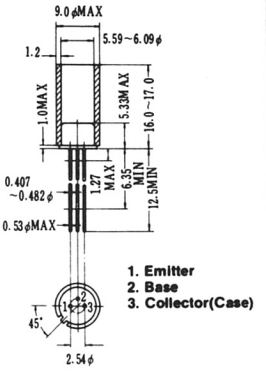


## FS-91

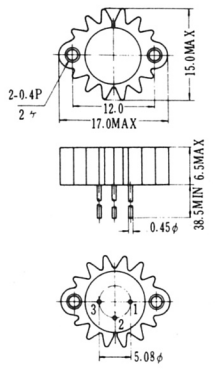

## FS-92

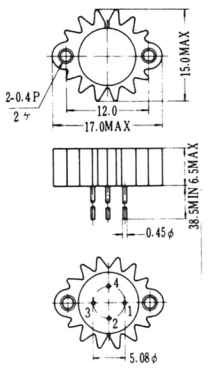

## FS-93

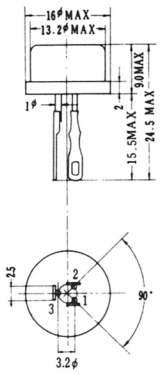

## FS-94

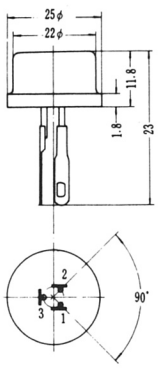

## FS-95

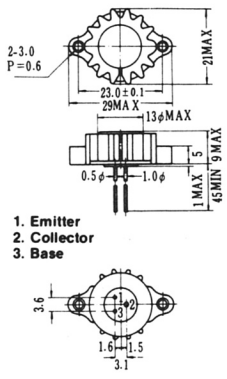


## FS-96

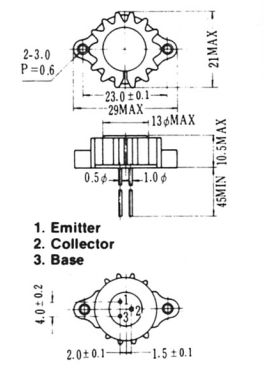


## FS-97

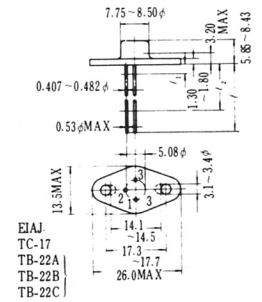


| | A | B | C |
|---|---|---|---|
| $\ell$ | 38.1 MIN | 19.0 MIN | 12.5 MIN |
| $\ell_1$ | 1.27MAX | 1.27MAX | 1.27MAX |
| $\ell_2$ | 25.4 MIN | 12.7 MIN | 6.35 MIN |

## FS-98

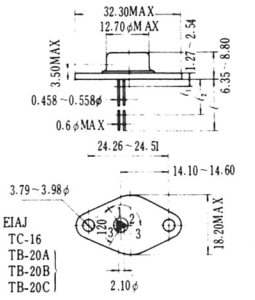


| | A | B | C |
|---|---|---|---|
| $\ell$ | 38.1 MIN | 19.0 MIN | 12.5 MIN |
| $\ell_1$ | 1.27 ~ 2.54 | 1.27 ~ 2.54 | 1.27 ~ 2.54 |
| $\ell_2$ | 25.4 MIN | 12.7 MIN | 6.35 MIN |

## FS-99

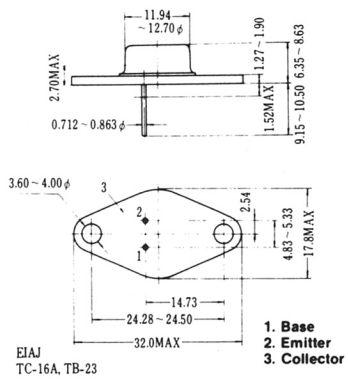


## FS-100

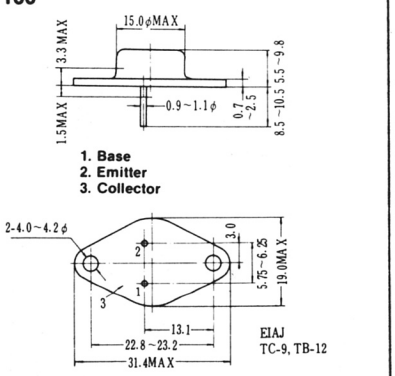


## FS-101

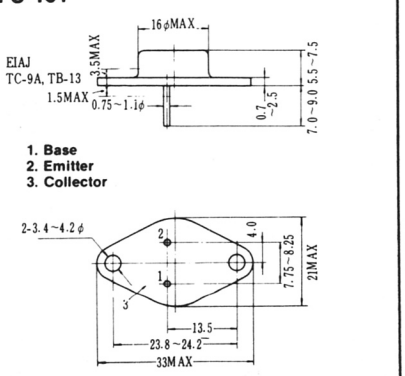


## FS-102

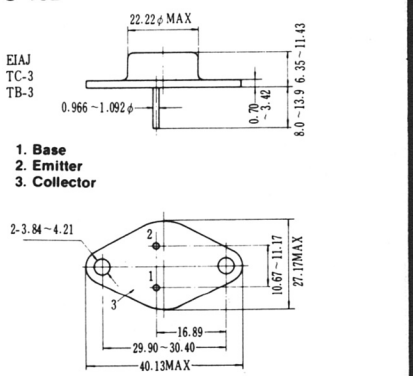

## FS-103

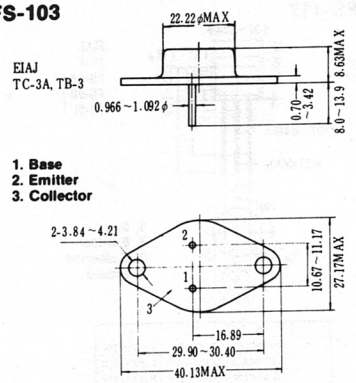


## FS-104

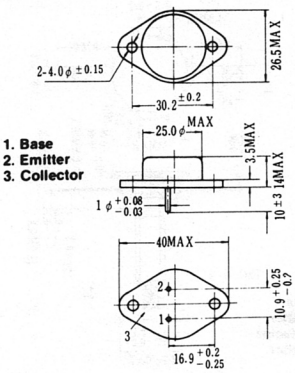


## FS-105

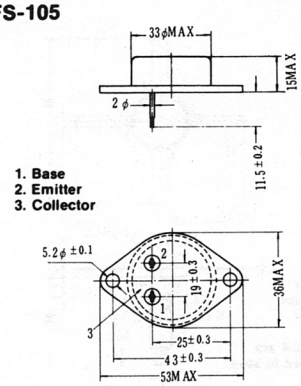


## FS-106

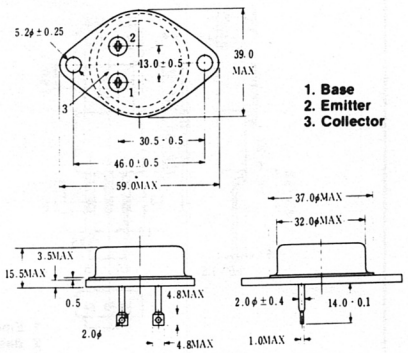


## FS-107

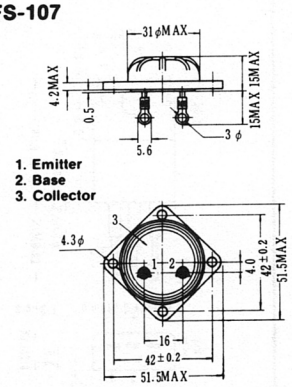


## FS-108

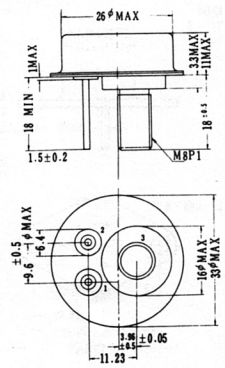


## FS-109

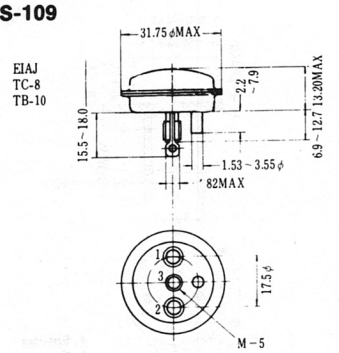


## FS-110

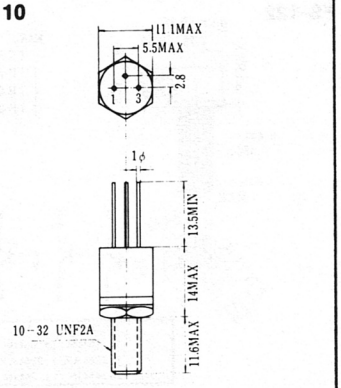


## FS-111

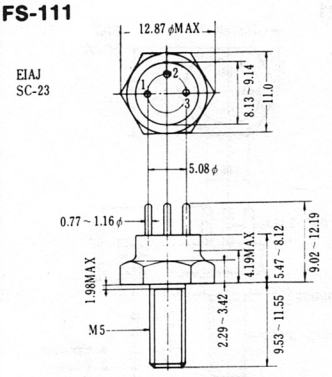


## FS-112

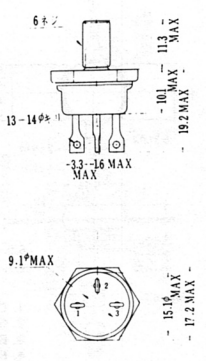


## FS-113

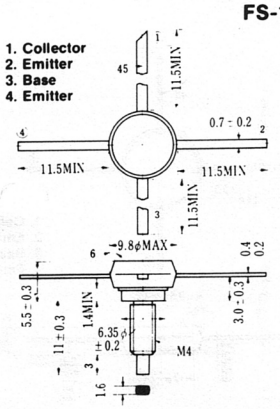


## FS-114

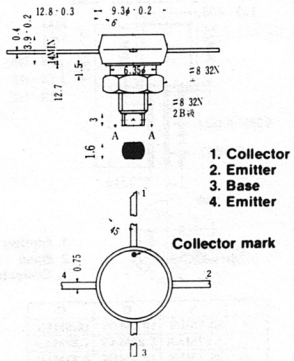

**Pin Configurations are 1. Emitter, 2. Base, 3. Collector, 4. Shield, unless otherwise specified. (Outline Dimensions: mm)**

## FS-115

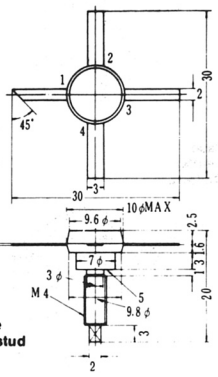

1. Base
2. Emitter
3. Collector
4. Emitter
5. Stud

Emitter 2,4 are connected to stud

## FS-116

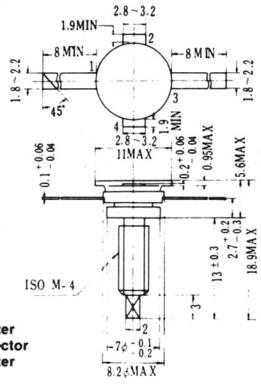

1. Base
2. Emitter
3. Collector
4. Emitter

## FS-117

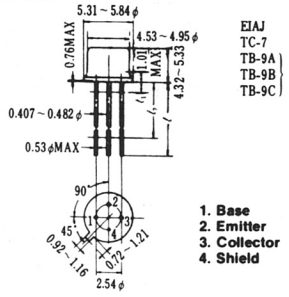

EIAJ
TC-7
TB-9A
TB-9B
TB-9C

1. Base
2. Emitter
3. Collector
4. Shield

| | A | B | C |
|---|---|---|---|
| $\ell$ | 38.1MIN | 19.0MIN | 12.5MIN |
| $\ell_1$ | 1.27MAX | 1.27MAX | 1.27MAX |
| $\ell_2$ | 25.4MIN | 12.7MIN | 6.35MIN |

## FS-118

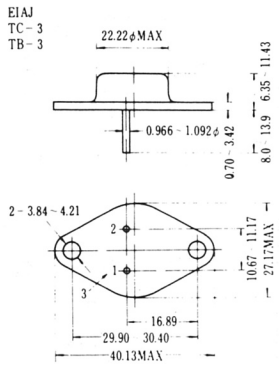

1. Base
2. Collector
3. Emitter

## FS-119

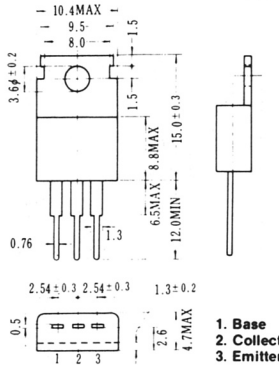

1. Base
2. Collector
3. Emitter

## FS-120

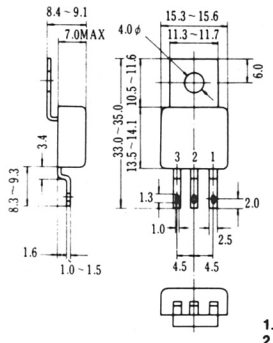

1. Emitter
2. Base
3. Collector

## FS-121

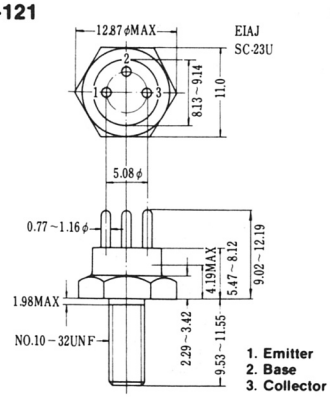

1. Emitter
2. Base
3. Collector

## FS-122

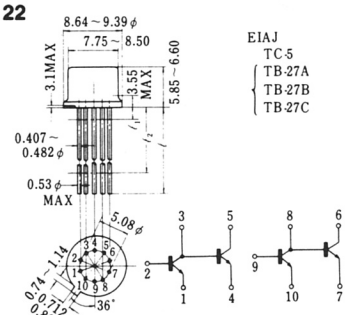

| | A | B | C |
|---|---|---|---|
| $\ell$ | 38.1MIN | 19.0MIN | 12.5MIN |
| $\ell_1$ | 1.27MAX | 1.27MAX | 1.27MAX |
| $\ell_2$ | 25.4MIN | 12.7MIN | 6.35MIN |

## FS-123

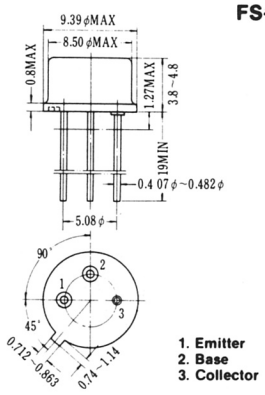

1. Emitter
2. Base
3. Collector

## FS-124

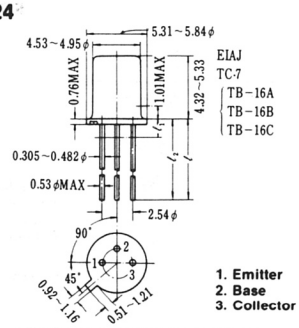

| | A | B | C |
|---|---|---|---|
| $\ell$ | 38.1MIN | 19.0MIN | 12.5MIN |
| $\ell_1$ | 1.27MAX | 1.27MAX | 1.27MAX |
| $\ell_2$ | 25.4MIN | 12.7MIN | 6.35MIN |

1. Emitter
2. Base
3. Collector

## FS-125

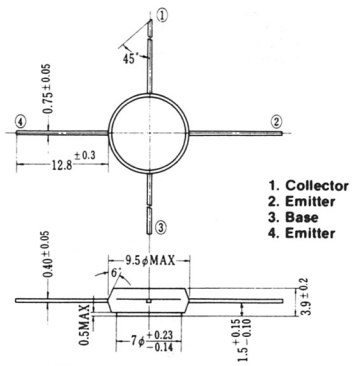

1. Collector
2. Emitter
3. Base
4. Emitter

## FS-126

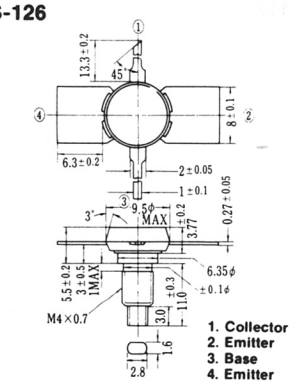

1. Collector
2. Emitter
3. Base
4. Emitter

Pin Configurations are 1. Emitter, 2. Base, 3. Collector, 4. Shield, unless otherwise specified. (Outline Dimensions: mm)

## FS-127

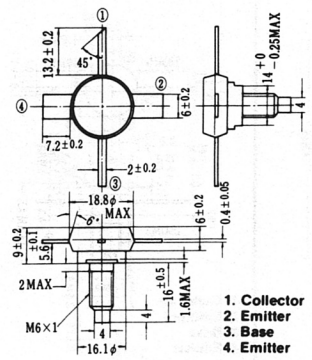


## FS-128

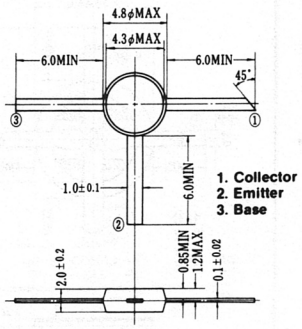


## FS-129

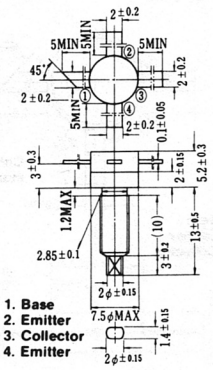


## FS-130

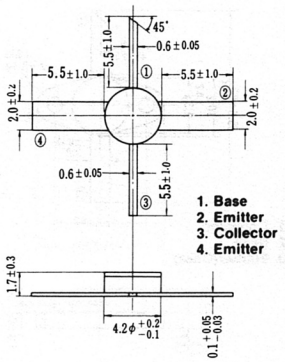


## FS-131

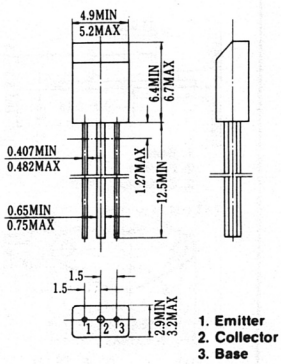


## FS-132

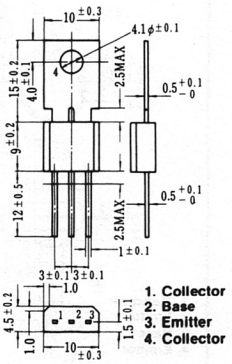


## FS-133

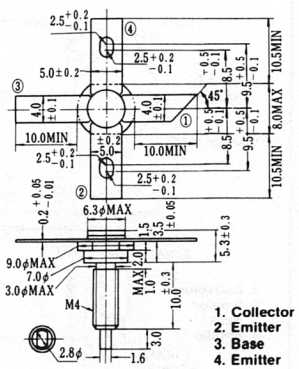


## FS-134

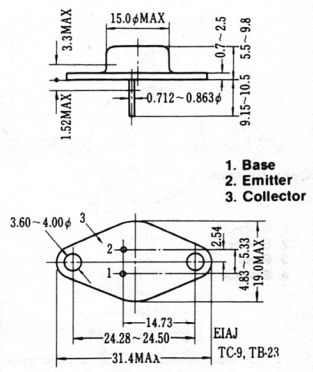


## FS-135

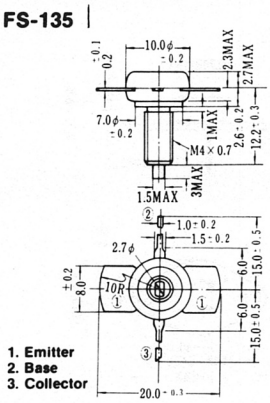


## FS-136

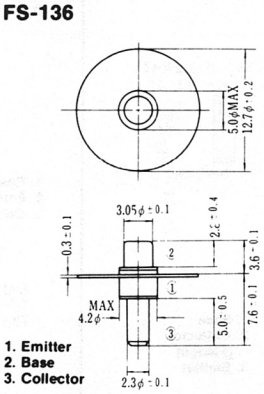


## FS-137

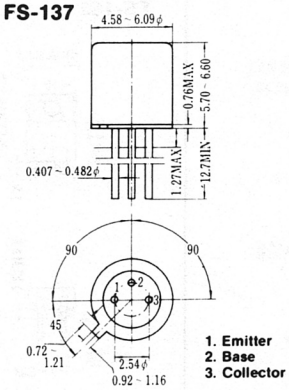


## FS-138

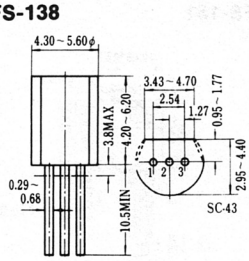


| | 1 | 2 | 3 |
|---|---|---|---|
| 138 | E | C | B |
| 138B | B | C | E |
| 138C | B | E | C |
| 138D | E | B | C |
| 138E | C | E | B |
| 138F | C | B | E |

## FS-139

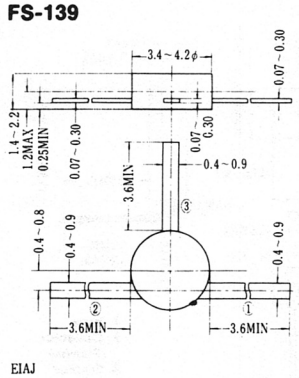


## FS-140

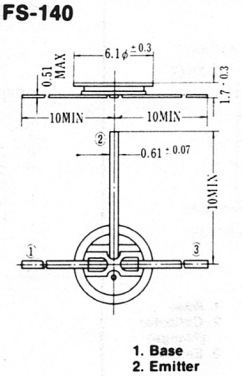


## FS-141

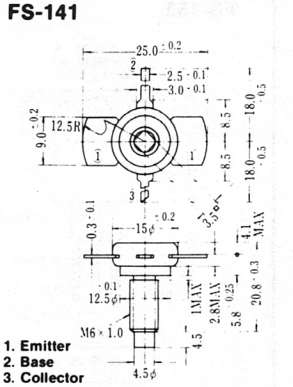


## FS-142

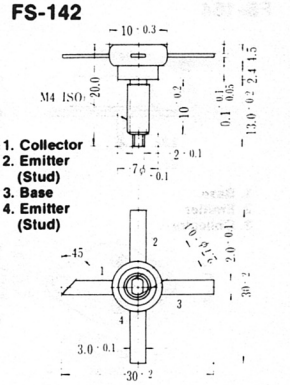

Pin Configurations are 1. Emitter, 2. Base, 3. Collector, 4. Shield, unless otherwise specified. (Outline Dimensions: mm)

## FS-143

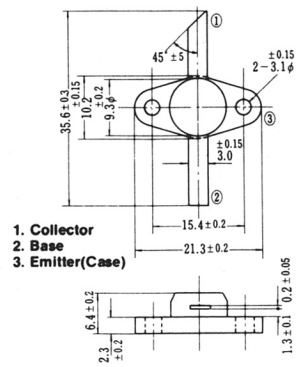


## FS-144

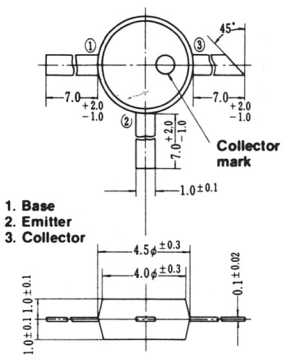


## FS-145

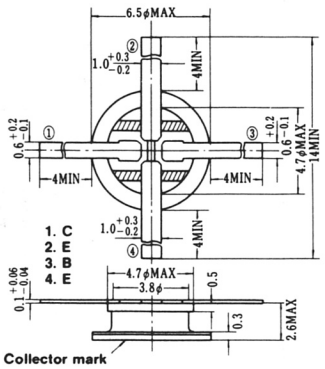


## FS-146

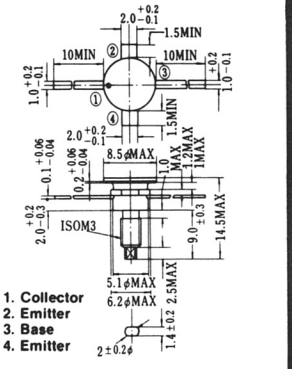


## FS-147

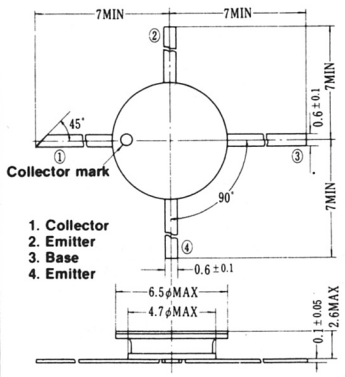


## FS-148

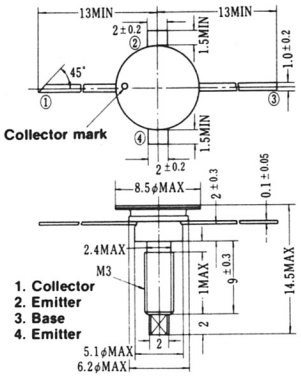


## FS-149

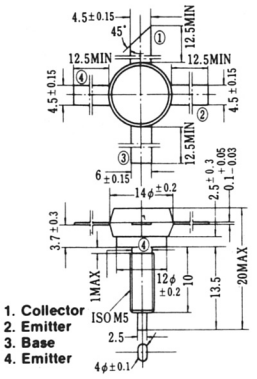


## FS-150

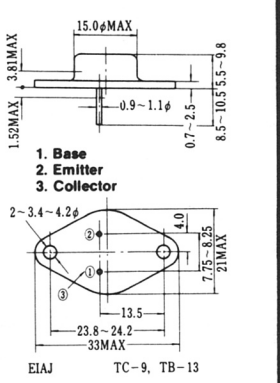


## FS-151

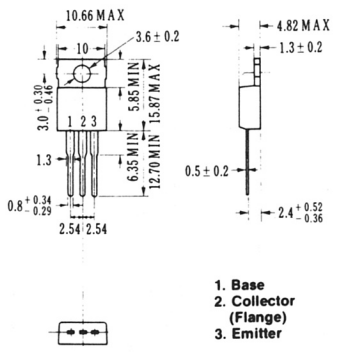


## FS-152

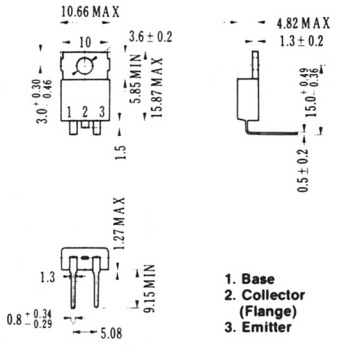


## FS-153

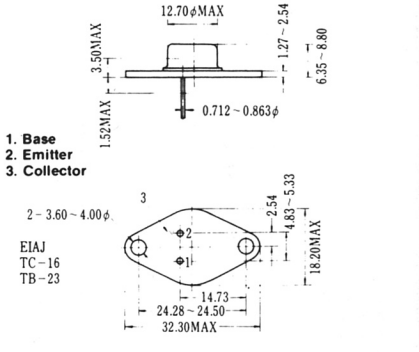


## FS-154

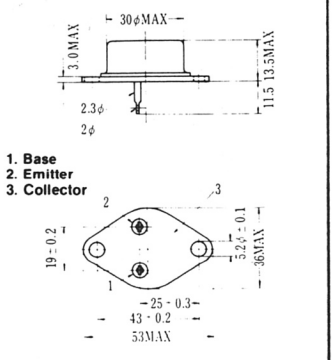


## FS-155

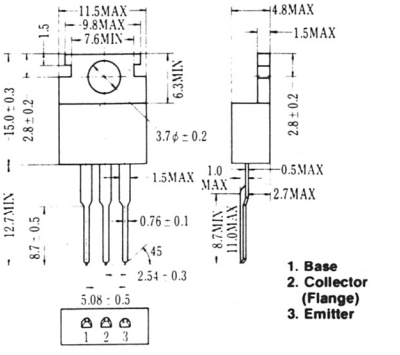


## FS-156

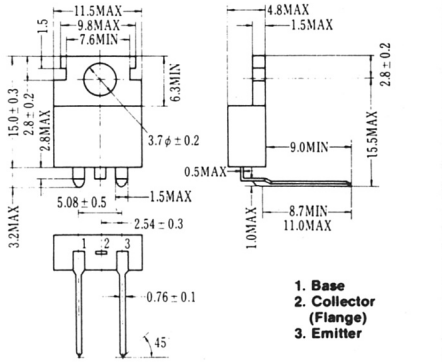

Pin Configurations are 1. Emitter, 2. Base, 3. Collector, 4. Shield, unless otherwise specified. (Outline Dimensions: mm)

## FS-157

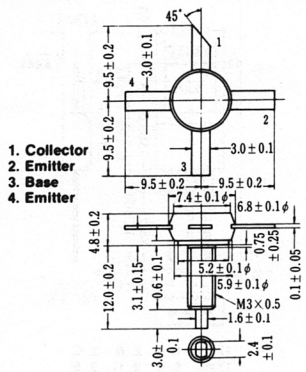


## FS-158

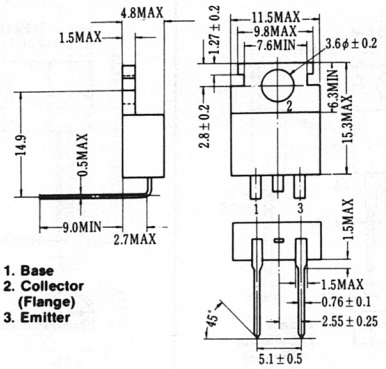


## FS-159

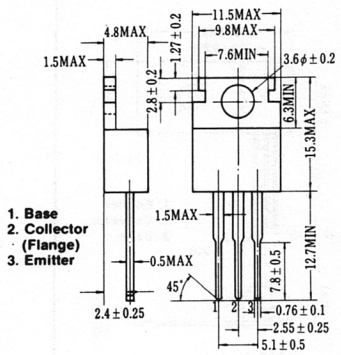


## FS-160

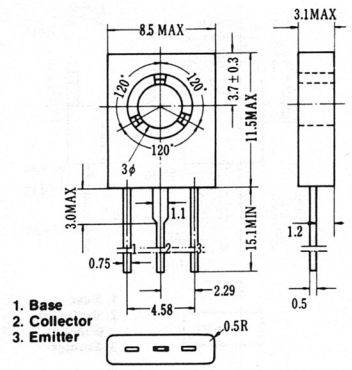


## FS-161

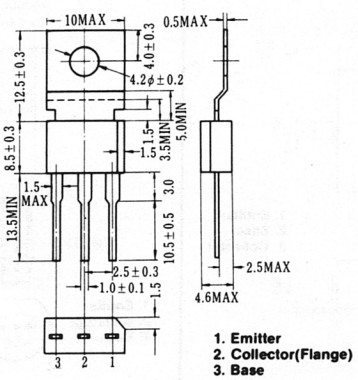


## FS-162

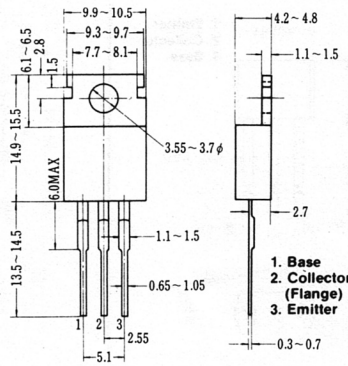


## FS-163

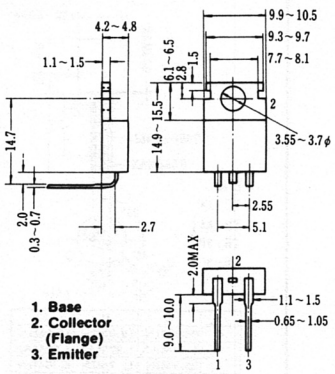


## FS-164

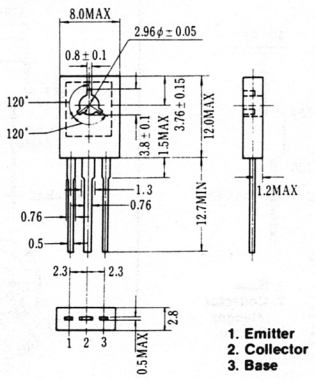


## FS-165

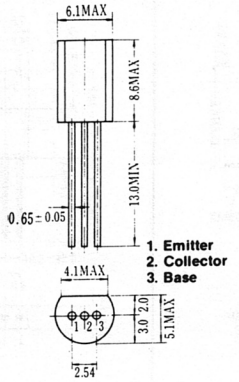


## FS-166

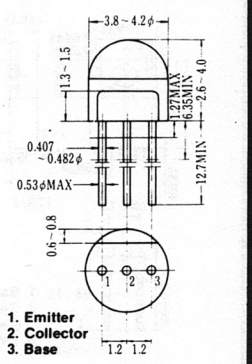


## FS-167

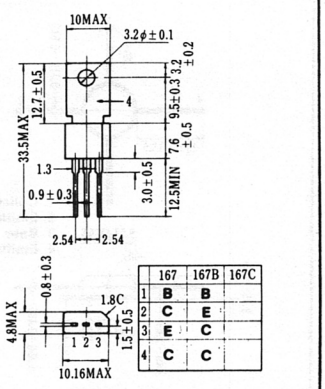

| | 167 | 167B | 167C |
|---|---|---|---|
| 1 | B | B | |
| 2 | C | E | |
| 3 | E | C | |
| 4 | C | C | |

## FS-168

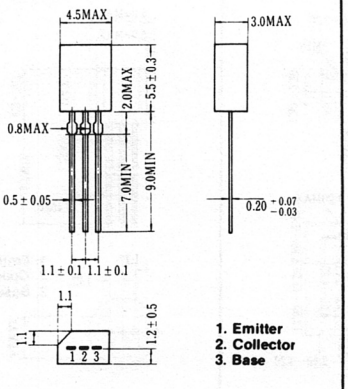


## FS-169

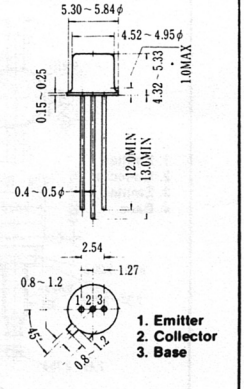


## FS-170

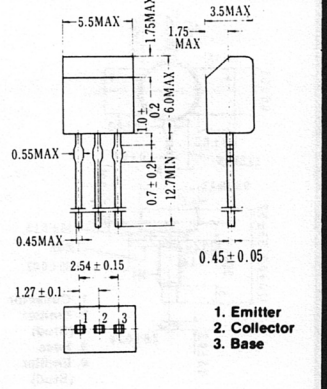

**Pin Configurations are 1. Emitter, 2. Base, 3. Collector, 4. Shield, unless otherwise specified. (Outline Dimensions: mm)**

## FS-171

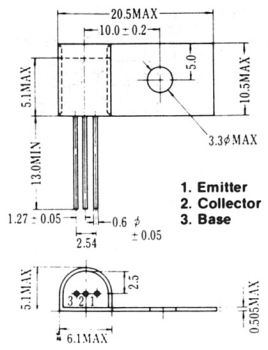


## FS-172

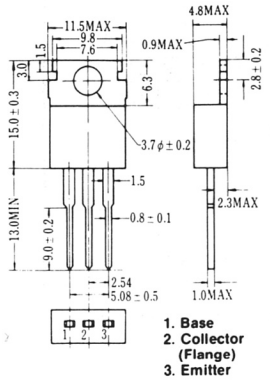


## FS-173

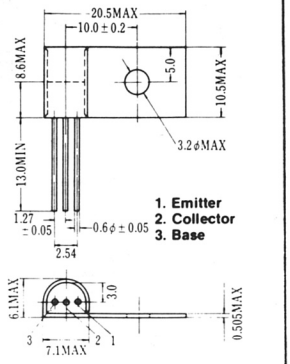


## FS-174

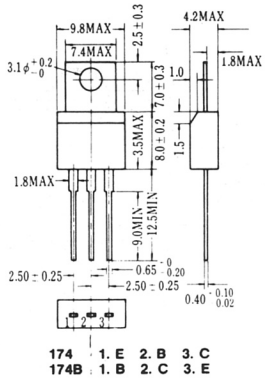


## FS-175

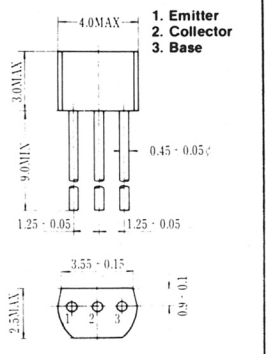


## FS-176

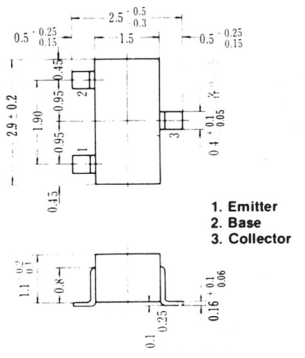


## FS-177

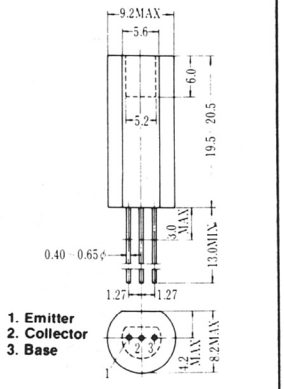


## FS-178

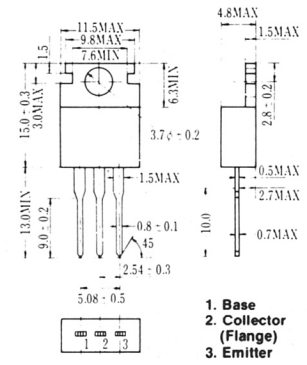


## FS-179

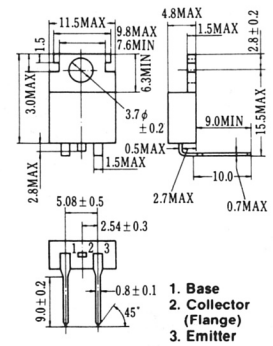


## FS-180

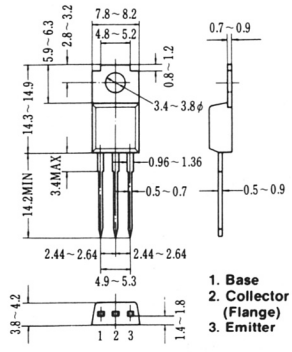


## FS-181

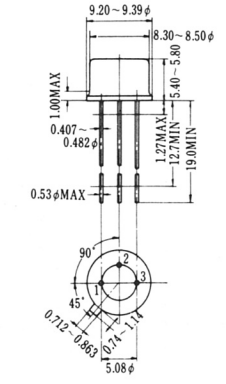


## FS-182

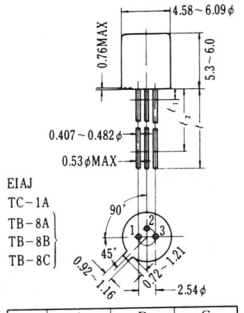


| | A | B | C |
|---|---|---|---|
| $\ell$ | 38.1MIN | 19.0MIN | 12.5MIN |
| $\ell_1$ | 1.27MAX | 1.27MAX | 1.27MAX |
| $\ell_2$ | 25.4MIN | 12.7MIN | 6.35MIN |

## FS-183

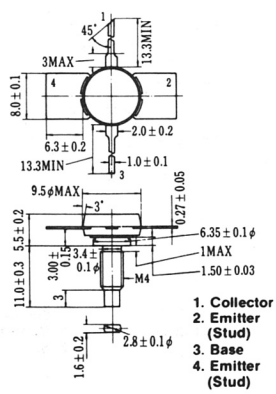


## FS-184

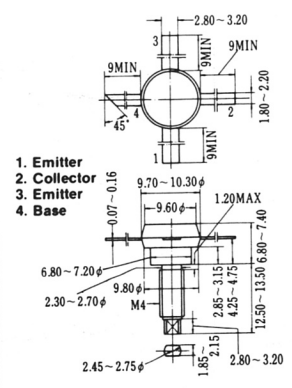


## FS-185

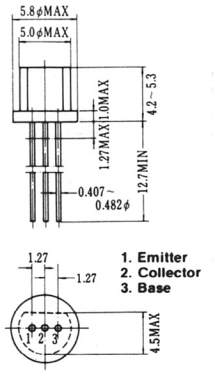


## FS-186

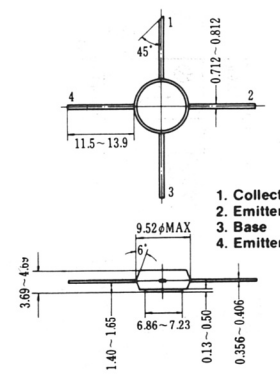

Pin Configurations are 1. Emitter, 2. Base, 3. Collector, 4. Shield, unless otherwise specified. (Outline Dimensions: mm)

## FS-187

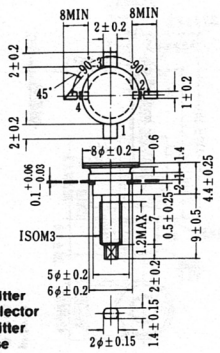


1. Emitter
2. Collector
3. Emitter
4. Base

## FS-188

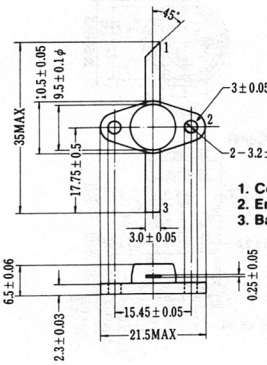


1. Collector
2. Emitter
3. Base

## FS-189

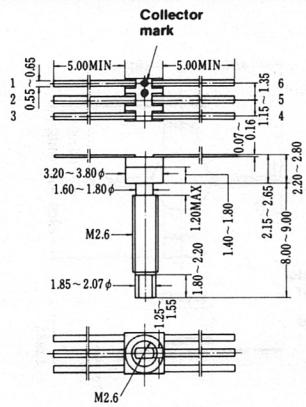


1. Collector-1
2. Base-1
3. Emitter-1
4. Emitter-2
5. Base-2
6. Collector-2

## FS-190

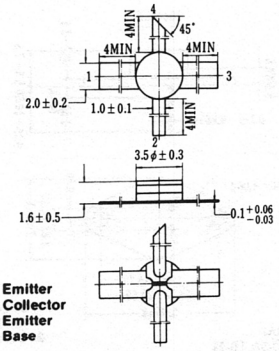


1. Emitter
2. Collector
3. Emitter
4. Base

## FS-191

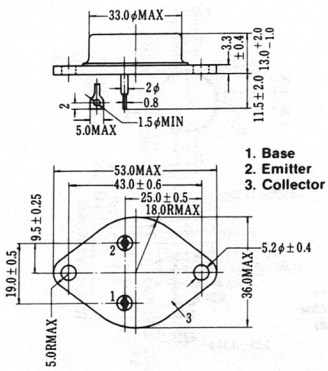


1. Base
2. Emitter
3. Collector

## FS-192

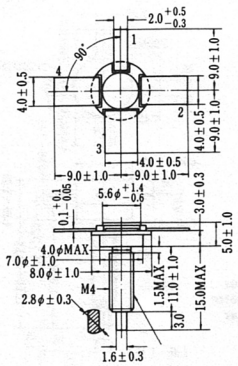


1. Collector
2. Emitter
3. Base
4. Emitter

## FS-193

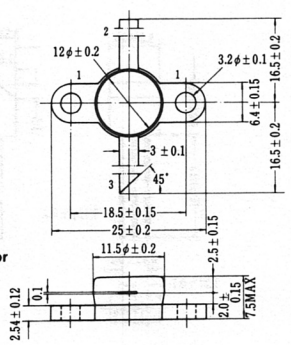


1. Emitter
2. Base
3. Collector

## FS-194

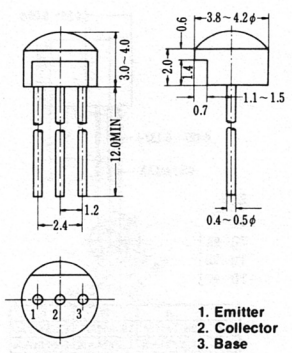


1. Emitter
2. Collector
3. Base

## FS-195

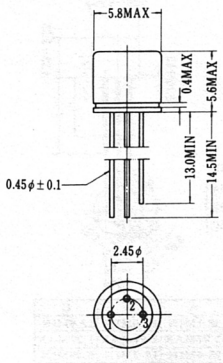


1. Emitter
2. Base
3. Collector

## FS-196

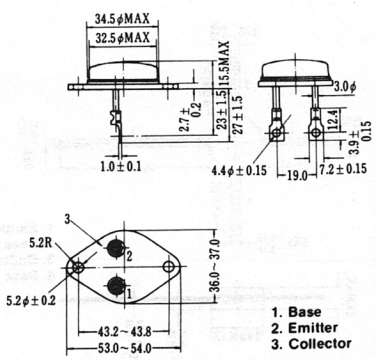


1. Base
2. Emitter
3. Collector

## FS-197

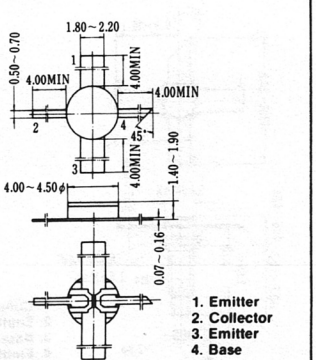


1. Emitter
2. Collector
3. Emitter
4. Base

## FS-198

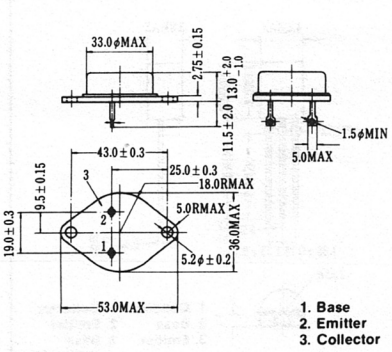


1. Base
2. Emitter
3. Collector

## FS-199

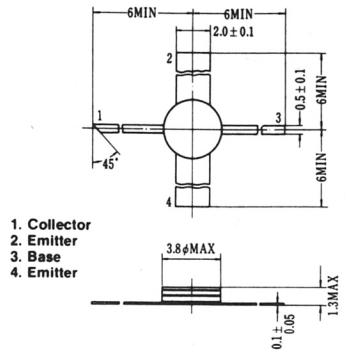


1. Collector
2. Emitter
3. Base
4. Emitter

## FS-200

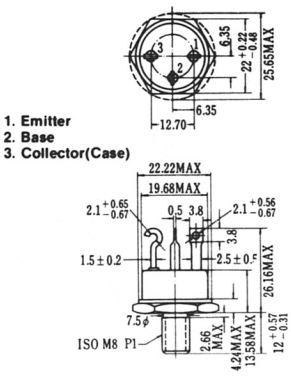


1. Emitter
2. Base
3. Collector(Case)

## FS-201

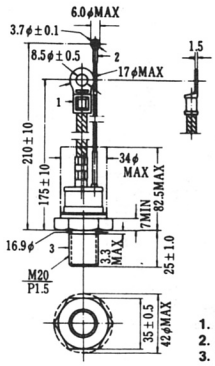


1. Emitter
2. Base
3. Collector(Case)

## FS-202

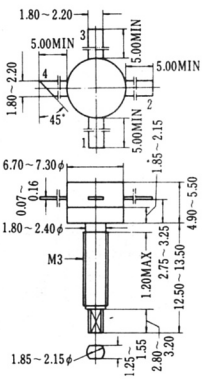


1. Emitter
2. Collector
3. Emitter
4. Base

## FS-203

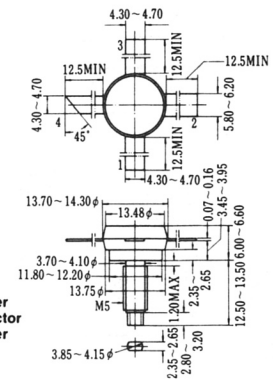


1. Emitter
2. Collector
3. Emitter
4. Base

## FS-204

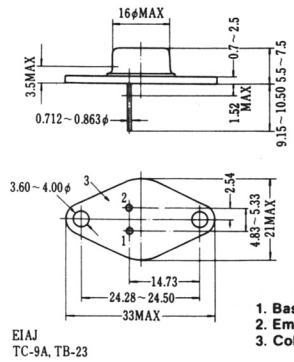


EIAJ
TC-9A, TB-23

1. Base
2. Emitter
3. Collector

## FS-205

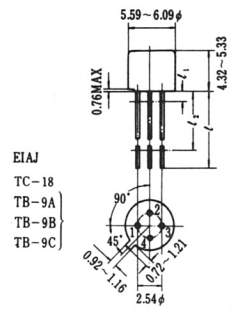


| | A | B | C |
|---|---|---|---|
| ℓ | 38.1MIN | 19.0MIN | 12.5MIN |
| ℓ1 | 1.27MAX | 1.27MAX | 1.27MAX |
| ℓ2 | 25.4MIN | 12.7MIN | 6.35MIN |

## FS-206

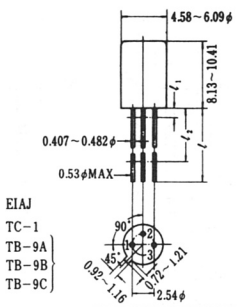


| | A | B | C |
|---|---|---|---|
| ℓ | 38.1MIN | 19.0MIN | 12.5MIN |
| ℓ1 | 1.27MAX | 1.27MAX | 1.27MAX |
| ℓ2 | 25.4MIN | 12.7MIN | 6.35MIN |

## FS-207

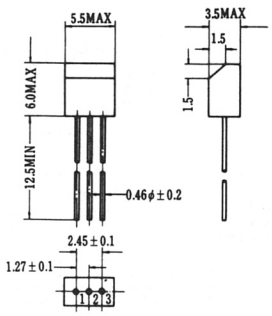


## FS-208

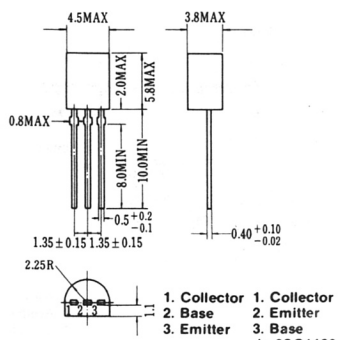


1. Collector
2. Base
3. Emitter

1. Collector
2. Emitter
3. Base
in 2SC1126
1128,1129

## FS-209

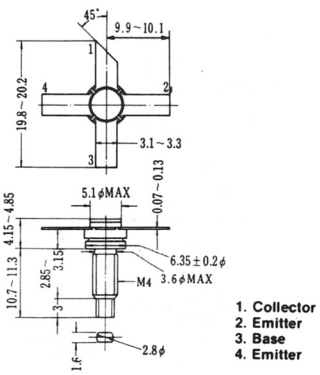


1. Collector
2. Emitter
3. Base
4. Emitter

## FS-210

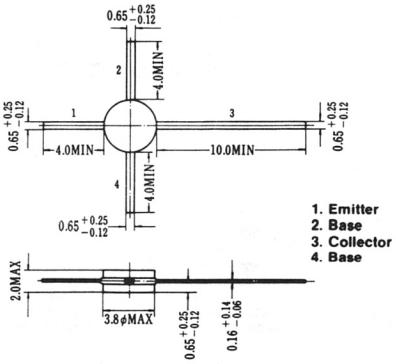


1. Emitter
2. Base
3. Collector
4. Base

Pin Configurations are 1. Emitter, 2. Base, 3. Collector, 4. Shield, unless otherwise specified. (Outline Dimensions: mm)

## FS-211

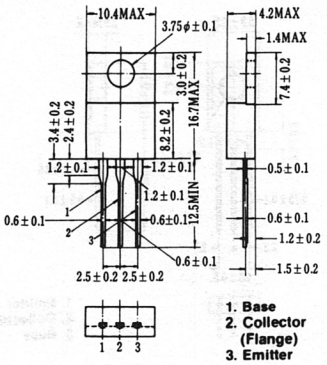


## FS-212

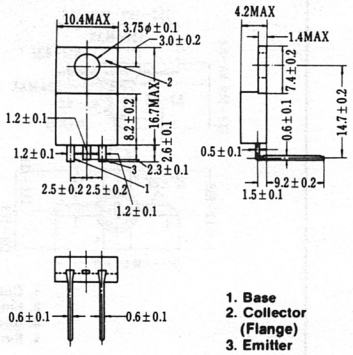


## FS-213

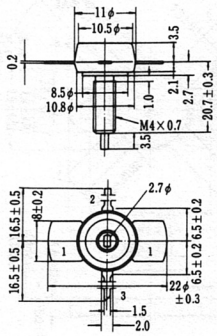

## FS-214

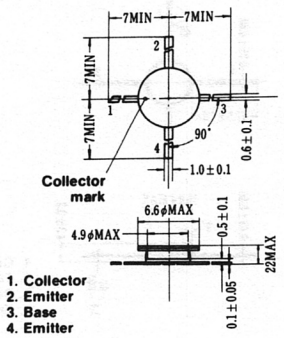


## FS-215

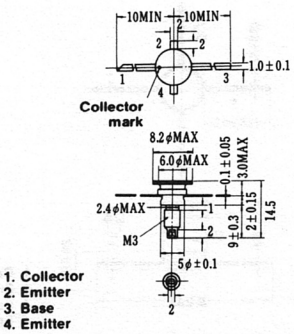


## FS-216

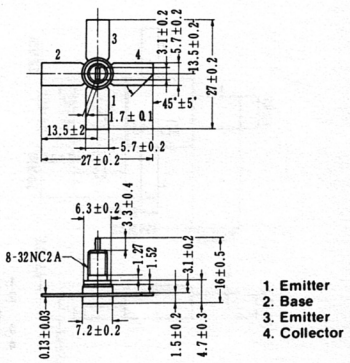


## FS-217

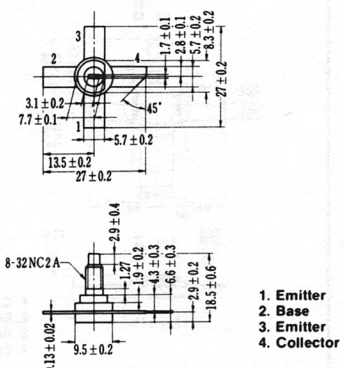


## FS-218

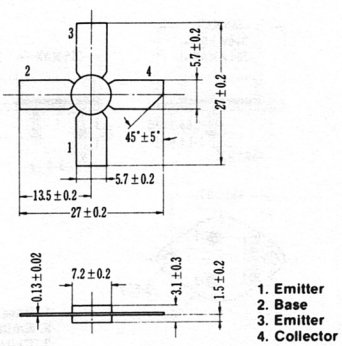


## FS-219

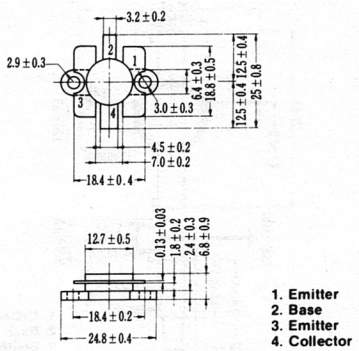


## FS-220

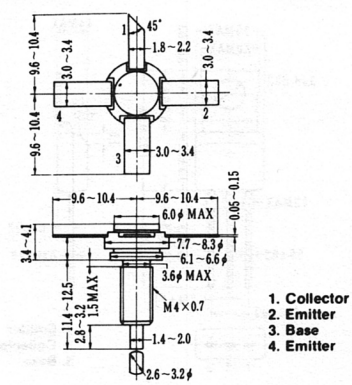


## FS-221

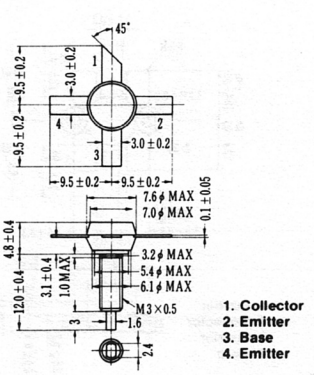


## FS-222

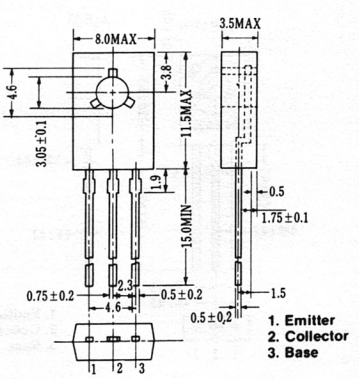

## FS-223

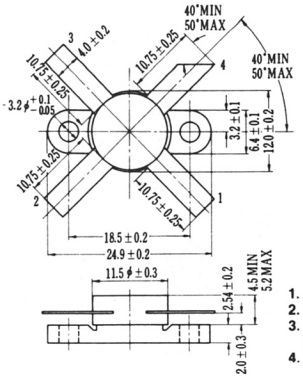


1. Diode anode
2. Base
3. Emitter
   Diode cathode
4. Collector

## FS-224

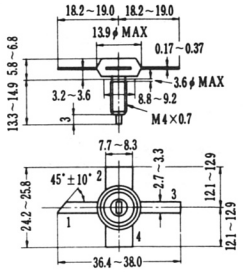


1. Collector
2. Emitter
3. Base
4. Emitter

## FS-225

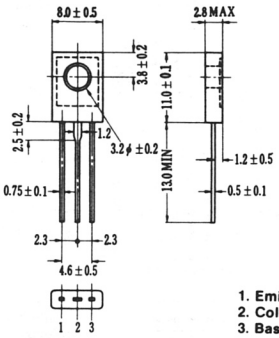


1. Emitter
2. Collector
3. Base

## FS-226

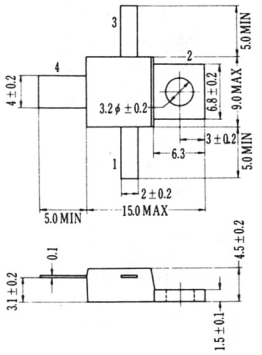


1. Base
2. Emitter
   (Flange)
3. Collector
4. Emitter

## FS-227

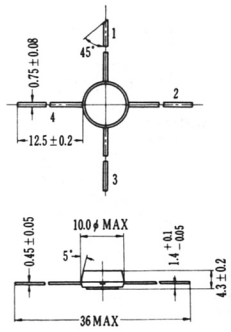


1. Collector
2. Emitter
3. Base
4. Emitter

## FS-228

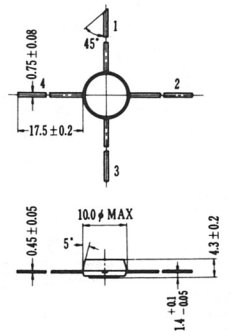


1. Collector
2. Emitter
3. Base
4. Emitter

## FS-229

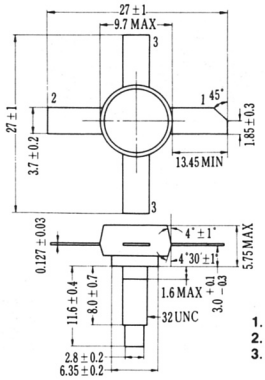


1. Collector
2. Base
3. Emitter

## FS-230

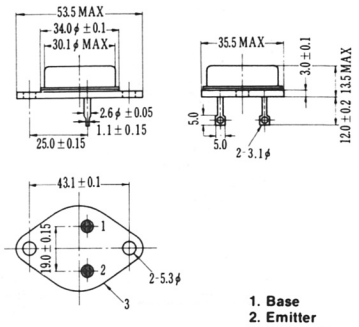


1. Base
2. Emitter
3. Collector

## FS-231

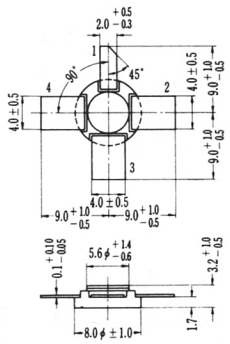


1. Collector
2. Emitter
3. Base
4. Emitter

## FS-232

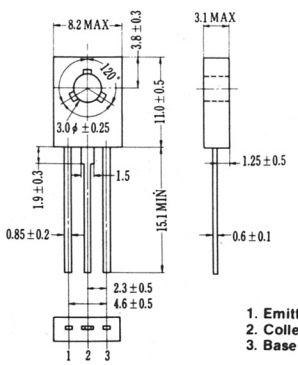


1. Emitter
2. Collector
3. Base

## FS-233

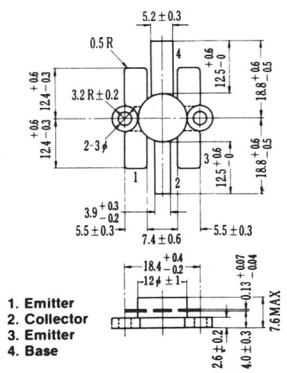


1. Emitter
2. Collector
3. Emitter
4. Base

## FS-234

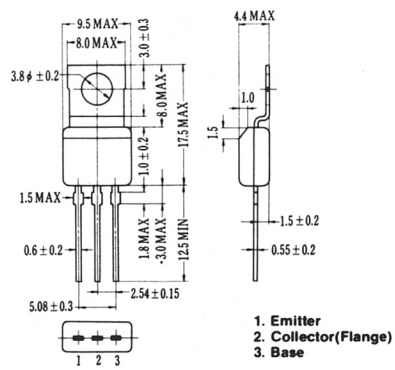


1. Emitter
2. Collector(Flange)
3. Base

## FS-235

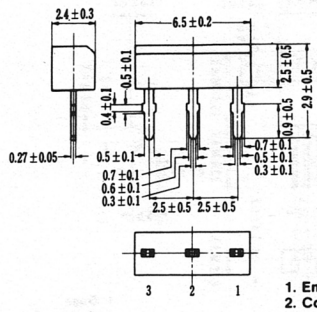

1. Emitter
2. Collector
3. Base

## FS-236

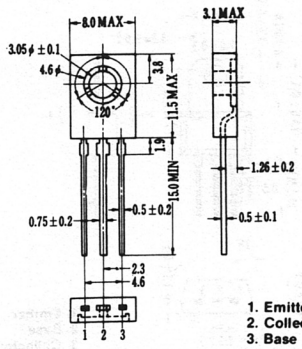

1. Emitter
2. Collector
3. Base

## FS-237

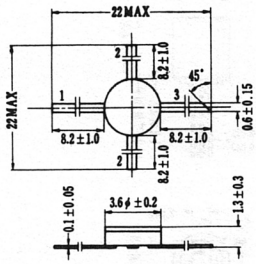

1. Base
2. Emitter
3. Collector

## FS-238

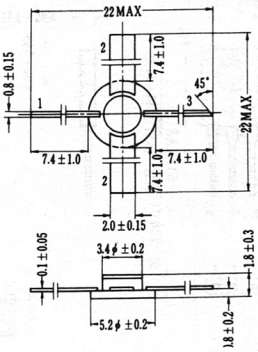

1. Base
2. Emitter
3. Collector

## FS-239

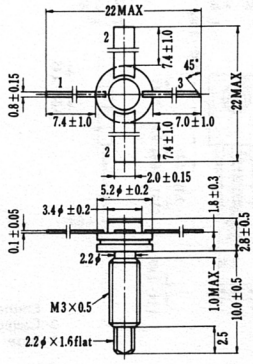

1. Base
2. Emitter
3. Collector

## FS-240

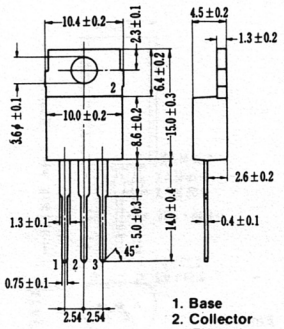

1. Base
2. Collector (Flange)
3. Emitter

## FS-241

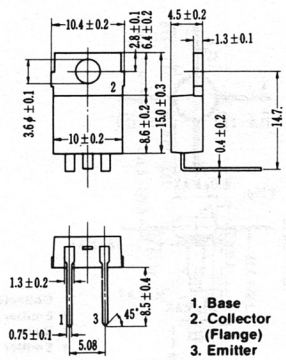

1. Base
2. Collector (Flange)
3. Emitter

## FS-242

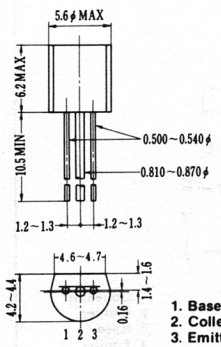

1. Base
2. Collector
3. Emitter

## FS-243

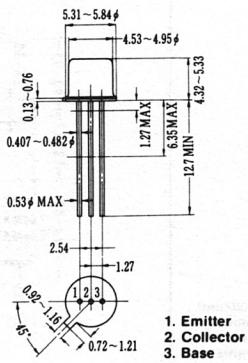

1. Emitter
2. Collector
3. Base

## FS-244

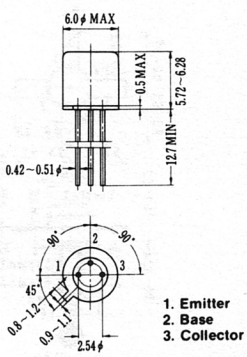

1. Emitter
2. Base
3. Collector

## FS-245

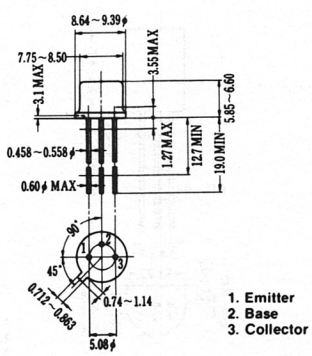

1. Emitter
2. Base
3. Collector

## FS-246

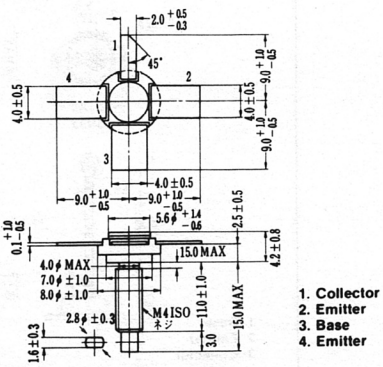

1. Collector
2. Emitter
3. Base
4. Emitter

## FS-247

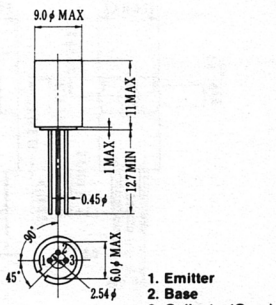

1. Emitter
2. Base
3. Collector(Case)

**Pin Configurations are 1. Emitter, 2. Base, 3. Collector, 4. Shield, unless otherwise specified. (Outline Dimensions: mm)**

## FS-248

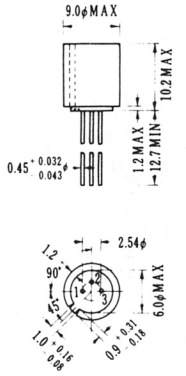

1. Emitter
2. Base
3. Collector(Case)

## FS-249

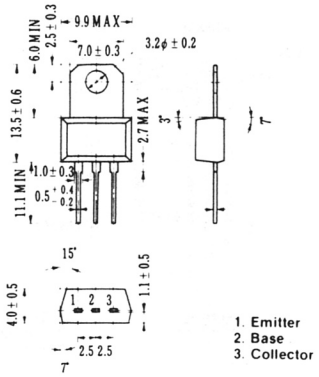

1. Emitter
2. Base
3. Collector

## FS-250

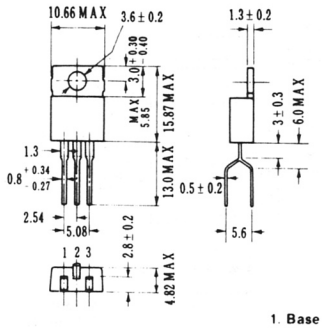

1. Base
2. Collector (Flange)
3. Emitter

## FS-251

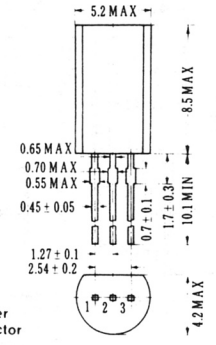

1. Emitter
2. Collector
3. Base

## FS-252

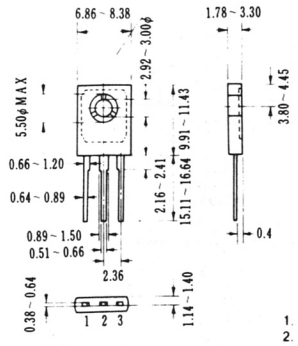

1. Emitter
2. Collector
3. Base

## FS-253

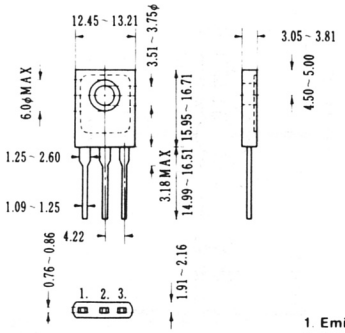

1. Emitter
2. Collector
3. Base

## FS-254

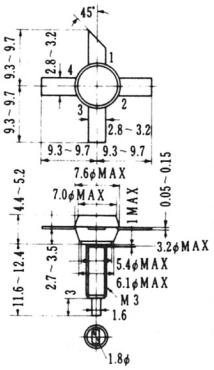

1. Collector
2. Emitter
3. Base
4. Emitter

## FS-255

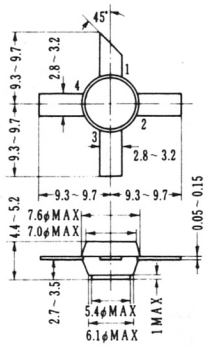

1. Collector
2. Emitter
3. Base
4. Emitter

## FS-256

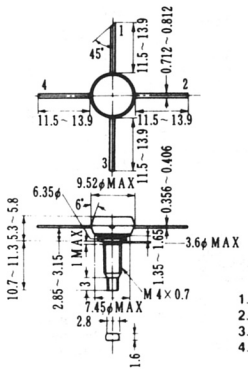

1. Collector
2. Emitter
3. Base
4. Emitter

## FS-257

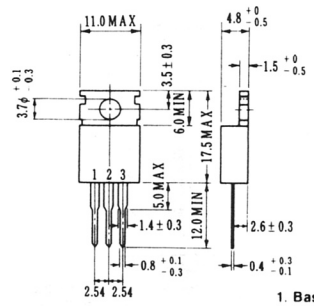

1. Base
2. Collector (Flange)
3. Emitter

## FS-258

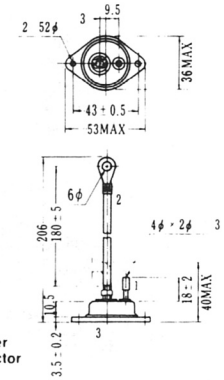

1. Base
2. Emitter
3. Collector

## FS-259

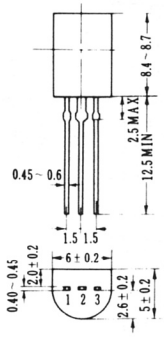

1. Emitter
2. Collector
3. Base

## FS-260

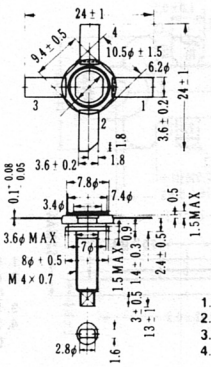

1. Emitter
2. Collector
3. Emitter
4. Base

## FS-261

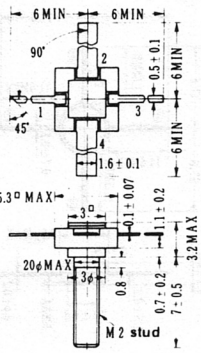

1. Collector
2. Emitter
3. Base
4. Emitter

## FS-262

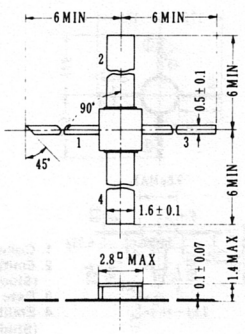

1. Collector
2. Emitter
3. Base
4. Emitter

## FS-263

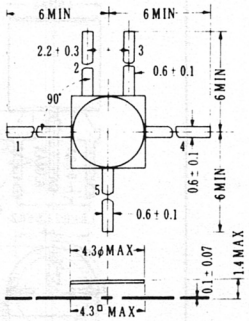

1. Base-1
2. Collector-1
3. Collector-2
4. Base-2
5. Emitter-1.2

## FS-264

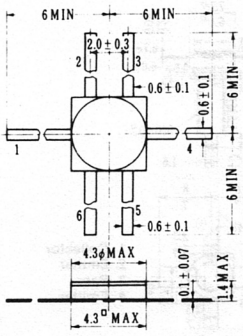

1. Emitter-1.2
2. Collector-1
3. Base-2
4. Emitter-1.2
5. Collector-2
6. Base-1

## FS-265

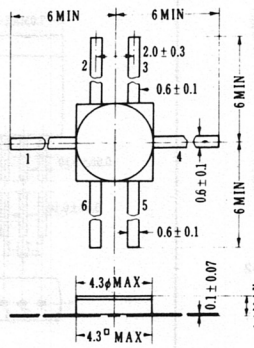

1. Emitter-1
2. Collector-1
3. Collector-2
4. Emitter-2
5. Base-2
6. Base-1

## FS-266

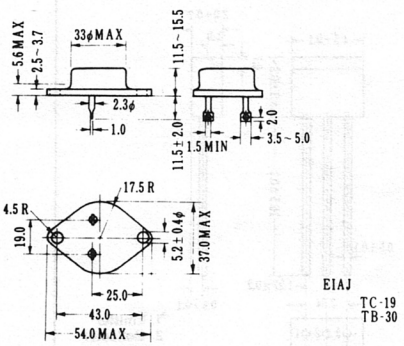

EIAJ
TC-19
TB-30

## FS-267

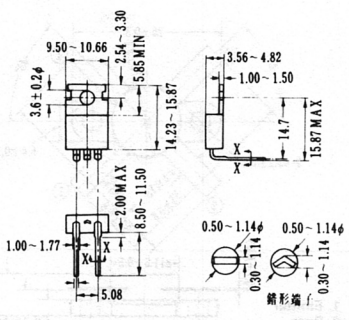

EIAJ SC-45

X-X 断面

## FS-268

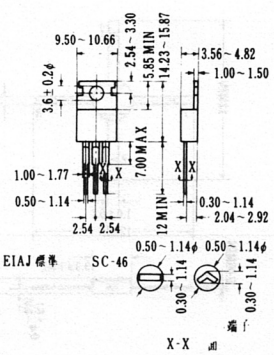

EIAJ 標準 SC-46

X-X 断面

## FS-269

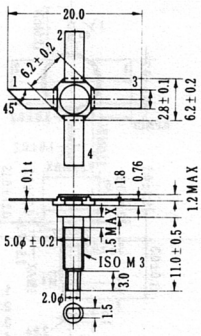

1. Collector
2. Emitter
3. Base
4. Emitter

Pin Configurations are 1. Emitter, 2. Base, 3. Collector, 4. Shield, unless otherwise specified. (Outline Dimensions: mm)

## FS-270

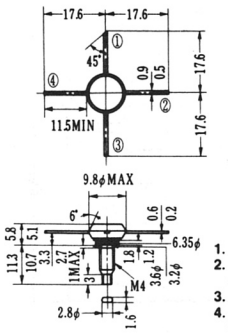

1. Collector
2. Emitter (Stud)
3. Base
4. Emitter (Stud)

## FS-271

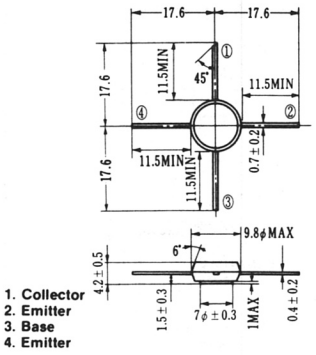

1. Collector
2. Emitter
3. Base
4. Emitter

## FS-272

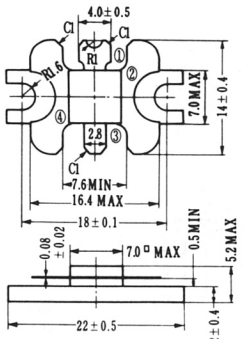

1. Collector
2. Emitter (Flange)
3. Base
4. Emitter (Flange)

## FS-273

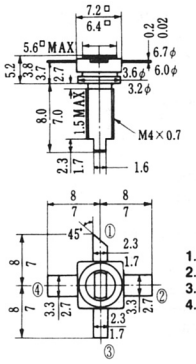

1. Collector
2. Emitter
3. Base
4. Emitter

## FS-274

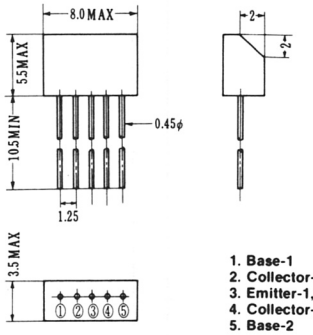

1. Base-1
2. Collector-1
3. Emitter-1,2
4. Collector-2
5. Base-2

## FS-275

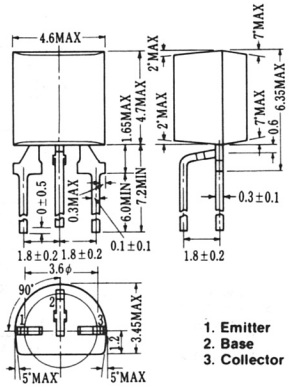

1. Emitter
2. Base
3. Collector

## FS-276

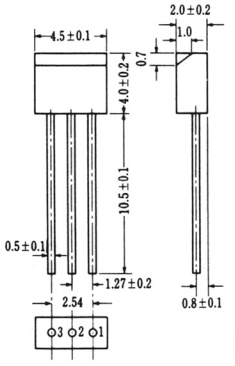

1. Emitter
2. Collector
3. Base

## FS-277

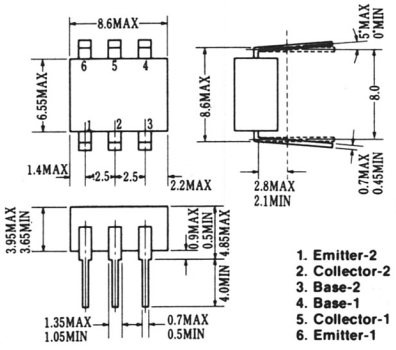

1. Emitter-2
2. Collector-2
3. Base-2
4. Base-1
5. Collector-1
6. Emitter-1

## FS-278

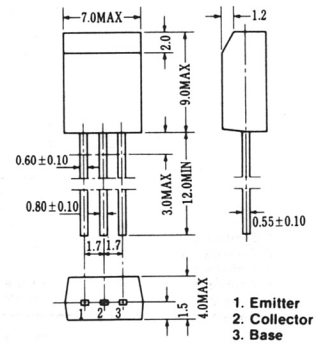

1. Emitter
2. Collector
3. Base

## FS-279

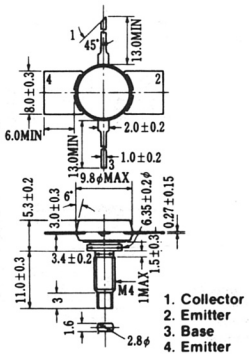

1. Collector
2. Emitter
3. Base
4. Emitter

## FS-280

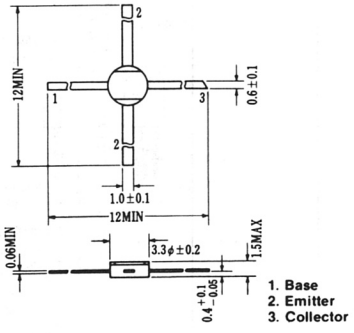

1. Base
2. Emitter
3. Collector

## FS-281

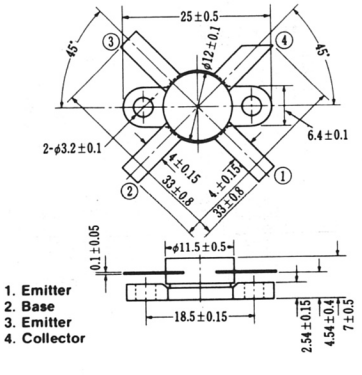

1. Emitter
2. Base
3. Emitter
4. Collector

Pin Configurations are 1. Emitter, 2. Base, 3. Collector, 4. Shield, unless otherwise specified. (Outline Dimensions: mm)

## FS-282

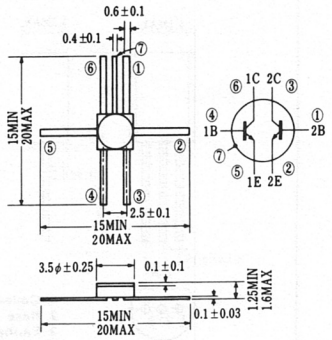

## FS-283

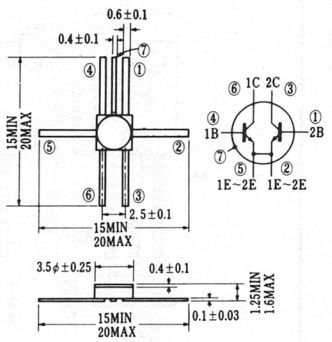

## FS-284

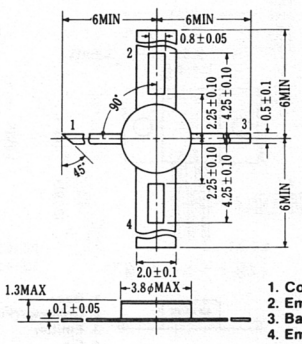

1. Collector
2. Emitter
3. Base
4. Emitter

## FS-285

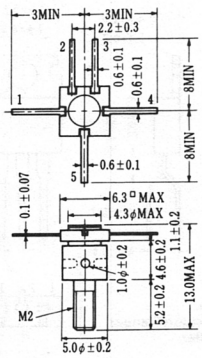

1. Base-1
2. Collector-1
3. Collector-2
4. Base-2
5. Emitter-1,2

## FS-286

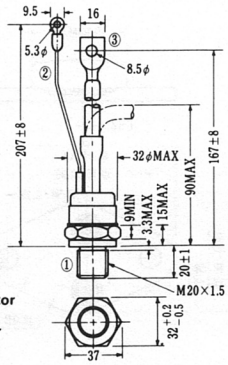

1. Collector
2. Base
3. Emitter

## FS-287

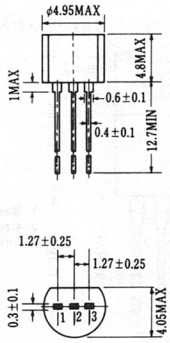

1. Emitter
2. Collector
3. Base

## FS-288

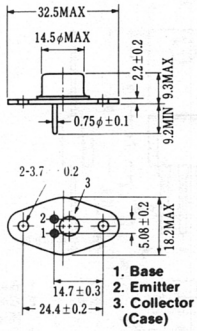

1. Base
2. Emitter
3. Collector (Case)

## FS-289

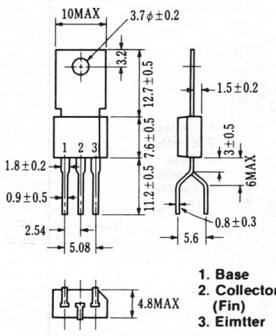

1. Base
2. Collector (Fin)
3. Eimtter

## FS-290

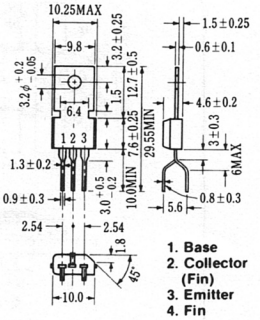

1. Base
2. Collector (Fin)
3. Emitter
4. Fin

## FS-291

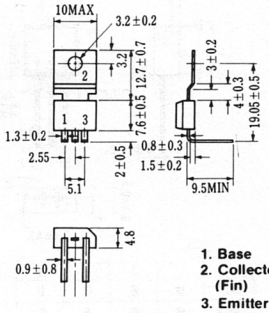

1. Base
2. Collector (Fin)
3. Emitter

## FS-292

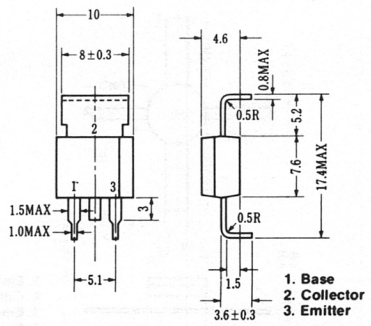

1. Base
2. Collector
3. Emitter

## FS-293

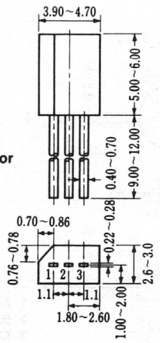

1. Emitter
2. Base
3. Collector

## FS-294

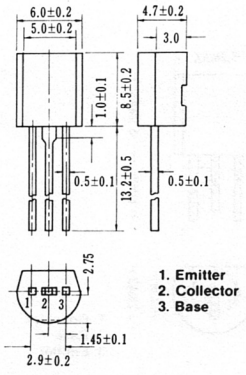

1. Emitter
2. Collector
3. Base

## FS-295

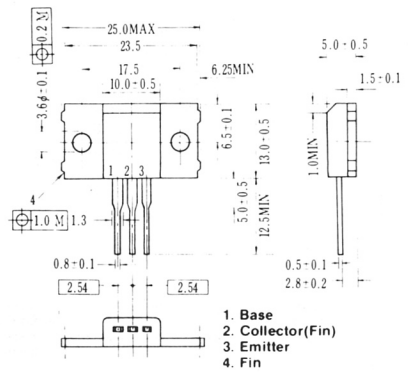


## FS-296

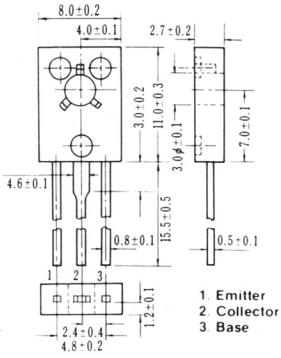


## FS-297

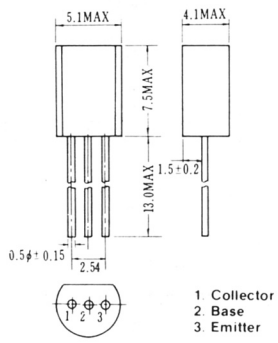


## FS-298

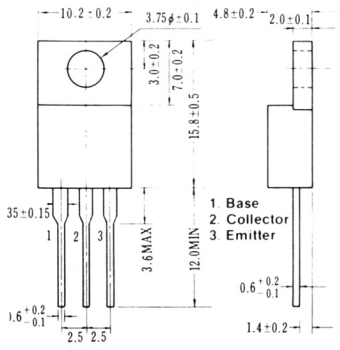


## FS-299

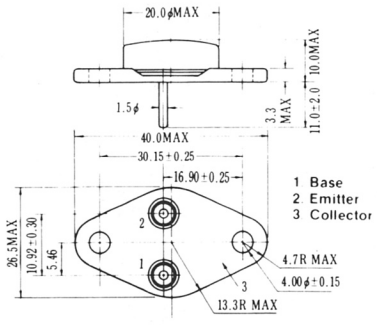


## FS-300

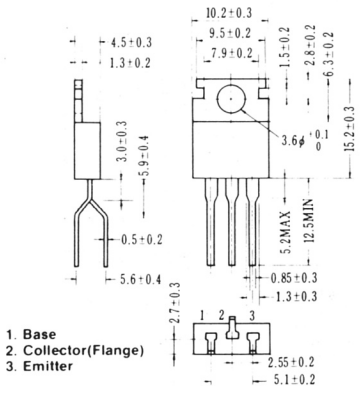


## FS-301

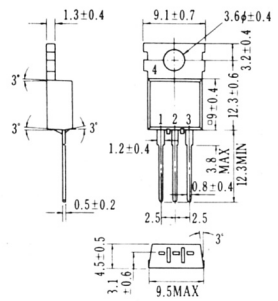

| | 1 | 2 | 3 | 4 |
|---|---|---|---|---|
| 301A | B | E | C | E |
| 301B | B | C | E | C |

## FS-302

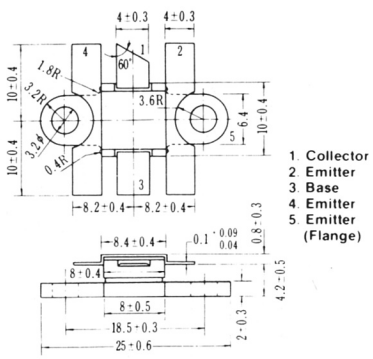


## FS-303

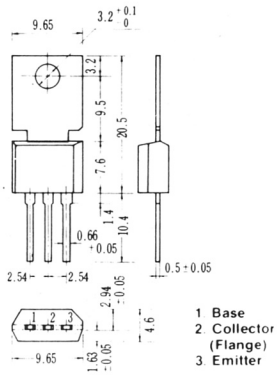


## FS-304

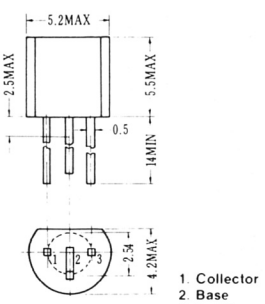


## FS-305

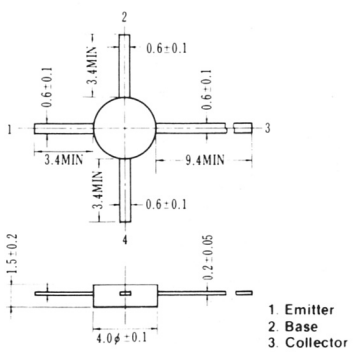


## FS-306

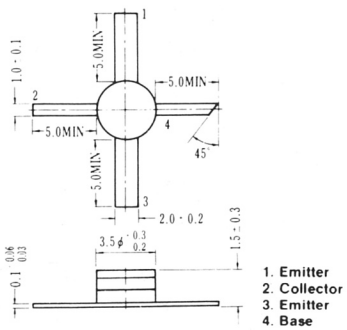

## FS-307

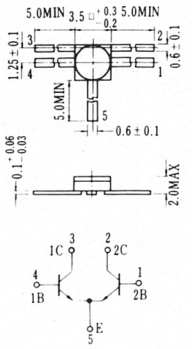


## FS-308

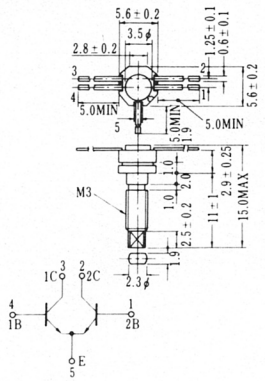


## FS-309

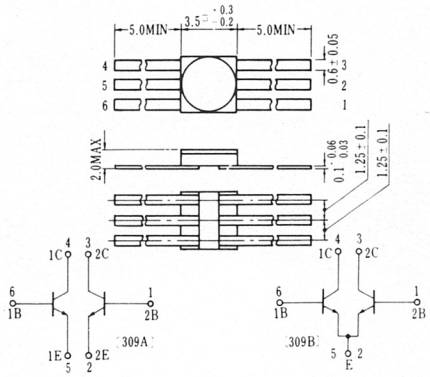


## FS-310

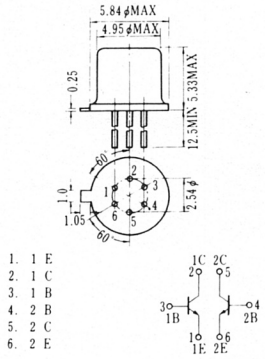


## FS-311

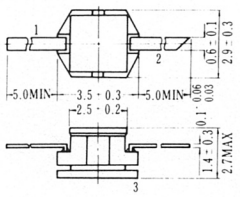


1. Emitter
2. Base
3. Collector

## FS-312

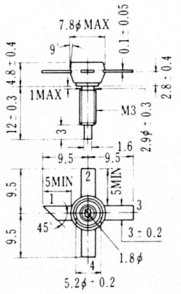


1. Collector
2. Emitter
3. Base
4. Emitter

## FS-313

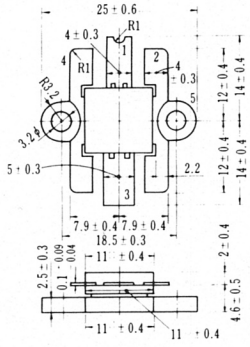


1. Collector
2. Emitter (Flange)
3. Base
4. Emitter (Flange)
5. Flange

## FS-314

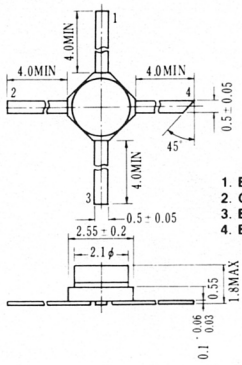


1. Emitter
2. Collector
3. Emitter
4. Base

## FS-315

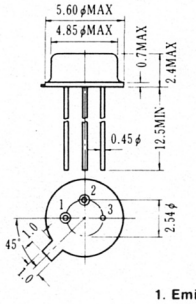


1. Emitter
2. Base
3. Collector(Case)